DIAGNOSTIC CODE INDEX

DIAGNOSTIC CODE INDEX

DTC	Description
P0008	ENGINE POSITION SYSTEM PERFORMANCE BANK 1
P000F	FUEL SYSTEM OVER PRESSURE RELIEF VALVE ACTIVATED
P0016	CRANKSHAFT/CAMSHAFT TIMING MISALIGNMENT - BANK 1 SENSOR 1
P003A	TURBOCHARGER BOOST CONTROL MODULE POSITION EXCEEDED LEARNING LIMIT
P0046	TURBOCHARGER BOOST CONTROL CIRCUIT PERFORMANCE
P0049	TURBOCHARGER TURBINE OVERSPEED
P006E	TURBOCHARGER BOOST CONTROL SUPPLY VOLTAGE CIRCUIT LOW
P0087	FUEL RAIL PRESSURE TOO LOW
P0088	FUEL RAIL PRESSURE TOO HIGH
P00AF	TURBOCHARGER BOOST CONTROL MODULE PERFORMANCE
P00DA	AMBIENT AIR TEMPERATURE SENSOR CIRCUIT PERFORMANCE
P00DB	AMBIENT AIR TEMPERATURE SENSOR CIRCUIT LOW
P00DC	AMBIENT AIR TEMPERATURE SENSOR CIRCUIT HIGH
P0101	MASS AIR FLOW SENSOR "A" CIRCUIT PERFORMANCE
P0102	MASS AIR FLOW SENSOR "A" CIRCUIT LOW
P0103	MASS AIR FLOW SENSOR "A" CIRCUIT HIGH
P0106	MANIFOLD ABSOLUTE PRESSURE SENSOR PERFORMANCE
P0107	MANIFOLD ABSOLUTE PRESSURE SENSOR CIRCUIT LOW
P0108	MANIFOLD ABSOLUTE PRESSURE SENSOR CIRCUIT HIGH
P0111	INTAKE AIR TEMPERATURE SENSOR 1 PERFORMANCE
P0112	INTAKE AIR TEMPERATURE SENSOR 1 CIRCUIT LOW
P0113	INTAKE AIR TEMPERATURE SENSOR 1 CIRCUIT HIGH
P0116	ENGINE COOLANT TEMPERATURE SENSOR PERFORMANCE
P0117	ENGINE COOLANT TEMPERATURE SENSOR CIRCUIT LOW
P0118	ENGINE COOLANT TEMPERATURE SENSOR CIRCUIT HIGH
P0128	THERMOSTAT RATIONALITY
P0169	WATER IN FUEL DETECTED FOR TOO LONG
P0191	FUEL RAIL PRESSURE SENSOR CIRCUIT PERFORMANCE
P0192	FUEL PRESSURE SENSOR LOW
P0193	FUEL PRESSURE SENSOR HIGH
P0201	FUEL INJECTOR 1 CIRCUIT/OPEN
P0202	FUEL INJECTOR 2 CIRCUIT/OPEN

P0203	FUEL INJECTOR 3 CIRCUIT/OPEN
P0204	FUEL INJECTOR 4 CIRCUIT/OPEN
P0205	FUEL INJECTOR 5 CIRCUIT/OPEN
P0206	FUEL INJECTOR 6 CIRCUIT/OPEN
P020A	FUEL INJECTOR 1 PERFORMANCE
P020B	FUEL INJECTOR 2 PERFORMANCE
P020C	FUEL INJECTOR 3 PERFORMANCE
P020D	FUEL INJECTOR 4 PERFORMANCE
P020E	FUEL INJECTOR 5 PERFORMANCE
P020F	FUEL INJECTOR 6 PERFORMANCE
P0217	COOLANT TEMPERATURE TOO HIGH
P0219	ENGINE OVERSPEED
P0253	INJECTION PUMP FUEL CONTROL CIRCUIT LOW
P0254	INJECTION PUMP FUEL CONTROL CIRCUIT HIGH
P0255	INJECTION PUMP FUEL CONTROL CIRCUIT PERFORMANCE
P026A	CHARGE AIR COOLER EFFICIENCY BELOW THRESHOLD
P0299	MANIFOLD PRESSURE SENSOR OUT OF RANGE LOW
P02E1	DIESEL INTAKE AIR FLOW CONTROL PERFORMANCE
P02E2	DIESEL INTAKE AIR FLOW CONTROL CIRCUIT LOW
P02E3	DIESEL INTAKE AIR FLOW CONTROL CIRCUIT HIGH
P02E7	DIESEL INTAKE AIR FLOW POSITION SENSOR PERFORMANCE
P02E8	DIESEL INTAKE AIR FLOW POSITION SENSOR CIRCUIT LOW
P02E9	DIESEL INTAKE AIR FLOW POSITION SENSOR CIRCUIT HIGH
P0300	MULTIPLE CYLINDER MISFIRE
P0301	CYLINDER 1 MISFIRE
P0302	CYLINDER 2 MISFIRE
P0303	CYLINDER 3 MISFIRE
P0304	CYLINDER 4 MISFIRE
P0305	CYLINDER 5 MISFIRE
P0306	CYLINDER 6 MISFIRE
P0335	CRANKSHAFT POSITION SENSOR CIRCUIT
P0336	CRANKSHAFT POSITION SENSOR PERFORMANCE
P0340	CAMSHAFT POSITION SENSOR CIRCUIT - BANK 1 SENSOR 1
P0341	CAMSHAFT POSITION SENSOR PERFORMANCE - BANK 1 SENSOR 1
P0381	WAIT TO START LAMP INOPERATIVE
P0401	EGR SYSTEM PERFORMANCE
P0402	EGR FLOW EXCESSIVE DETECTED
P0404	EGR CONTROL CIRCUIT PERFORMANCE
P0405	EGR POSITION SENSOR CIRCUIT LOW
P040B	EXHAUST GAS RECIRCULATION TEMPERATURE SENSOR "A" CIRCUIT PERFORMANCE

P040C	EXHAUST GAS RECIRCULATION TEMPERATURE SENSOR "A" CIRCUIT LOW
P040D	EXHAUST GAS RECIRCULATION TEMPERATURE SENSOR "A" CIRCUIT HIGH
P0420	CATALYST EFFICIENCY BELOW THRESHOLD
P0461	FUEL LEVEL SENSOR 1 PERFORMANCE
P0462	FUEL LEVEL SENSOR 1 CIRCUIT LOW
P0463	FUEL LEVEL SENSOR 1 CIRCUIT HIGH
P046C	EGR POSITION SENSOR CIRCUIT PERFORMANCE
P0471	EXHAUST PRESSURE SENSOR 1 PERFORMANCE
P0472	EXHAUST PRESSURE SENSOR 1 LOW
P0473	EXHAUST PRESSURE SENSOR 1 HIGH
P0489	EGR CONTROL CIRCUIT LOW
P049D	EGR CONTROL POSITION EXCEEDED LEARNING LIMIT
P04DB	CRANKCASE VENTILATION SYSTEM DISCONNECTED
P0501	VEHICLE SPEED SENSOR 1 PERFORMANCE
P0506	IDLE CONTROL SYSTEM RPM - LOWER THAN EXPECTED
P0507	IDLE CONTROL SYSTEM RPM - HIGHER THAN EXPECTED
P0513	INVALID WIN KEY
P051B	CRANKCASE PRESSURE SENSOR CIRCUIT RANGE/PERFORMANCE
P051C	CRANKCASE PRESSURE SENSOR CIRCUIT LOW
P051D	CRANKCASE PRESSURE SENSOR CIRCUIT HIGH
P0521	ENGINE OIL PRESSURE SENSOR PERFORMANCE
P0524	ENGINE OIL PRESSURE SENSOR CIRCUIT LOW
P0532	A/C PRESSURE SENSOR CIRCUIT LOW
P0533	A/C PRESSURE SENSOR CIRCUIT HIGH
P0541	INTAKE AIR HEATER CONTROL CIRCUIT 1 LOW
P0542	INTAKE AIR HEATER CONTROL CIRCUIT 1 HIGH
P0545	EXHAUST GAS TEMPERATURE SENSOR CIRCUIT LOW - BANK 1 SENSOR 1
P0546	EXHAUST GAS TEMPERATURE SENSOR CIRCUIT HIGH - BANK 1 SENSOR 1
P0562	BATTERY VOLTAGE LOW
P0563	BATTERY VOLTAGE HIGH
P056D	REDUCTANT CONTROL MODULE SYSTEM VOLTAGE
P0571	BRAKE SWITCH 1 PERFORMANCE
P0572	BRAKE SWITCH 1 STUCK ON
P0573	BRAKE SWITCH 1 STUCK OFF
P0579	SPEED CONTROL SWITCH 1 PERFORMANCE
P0580	SPEED CONTROL SWITCH 1 CIRCUIT LOW
P0581	SPEED CONTROL SWITCH 1 CIRCUIT HIGH
P0585	SPEED CONTROL SWITCH 1/2 CORRELATION

P0591	SPEED CONTROL SWITCH 2 PERFORMANCE
P0592	SPEED CONTROL SWITCH 2 CIRCUIT LOW
P0593	SPEED CONTROL SWITCH 2 CIRCUIT HIGH
P0601	INTERNAL MEMORY CHECKSUM ERROR
P0604	INTERNAL CONTROL MODULE RAM ERROR
P0606	INTERNAL CONTROL PROCESSOR
P0607	ECU INTERNAL PERFORMANCE
P061A	ETC LEVEL 2 TORQUE PERFORMANCE
P061C	ETC LEVEL 2 RPM PERFORMANCE
P0625	GENERATOR FIELD CONTROL CIRCUIT LOW
P0626	GENERATOR FIELD CONTROL CIRCUIT HIGH
P0628	FUEL PUMP CONTROL CIRCUIT LOW
P0629	FUEL PUMP CONTROL CIRCUIT HIGH
P062C	ETC LEVEL 2 MPH PERFORMANCE
P0630	VIN NOT PROGRAMMED IN PCM
P0633	SKIM SECRET KEY NOT STORED IN PCM
P063C	GENERATOR VOLTAGE SENSE LOW
P063D	GENERATOR VOLTAGE SENSE HIGH
P0642	SENSOR REFERENCE VOLTAGE 1 CIRCUIT LOW
P0643	SENSOR REFERENCE VOLTAGE 1 CIRCUIT HIGH
P0646	A/C CONTROL CIRCUIT LOW
P0647	A/C CONTROL CIRCUIT HIGH
P064C	GLOW PLUG MODULE INTERNAL PERFORMANCE
P0652	SENSOR REFERENCE VOLTAGE 2 LOW
P0653	SENSOR REFERENCE VOLTAGE 2 HIGH
P0658	ACTUATOR SUPPLY VOLTAGE "A" CIRCUIT LOW
P0686	POWER ENABLE CONTROL CIRCUIT LOW
P0691	COOLING FAN 1 CONTROL CIRCUIT LOW
P0692	COOLING FAN 1 CONTROL CIRCUIT HIGH
P0698	SENSOR REFERENCE VOLTAGE 3 CIRCUIT LOW
P0699	SENSOR REFERENCE VOLTAGE 3 CIRCUIT HIGH
P06A4	SENSOR REFERENCE VOLTAGE 4 CIRCUIT LOW
P06A5	SENSOR REFERENCE VOLTAGE 4 CIRCUIT HIGH
P06F3	(DIESEL EXHAUST FLUID) REDUCTANT CONTROL MODULE INTERNAL TEMPERATURE SENSOR CIRCUIT HIGH
P0700	TRANSMISSION CONTROL SYSTEM (MIL REQUEST)
P0850	PARK/NEUTRAL SWITCH PERFORMANCE
P1123	POWER TAKE OFF SYSTEM MONITOR CONTROL ERROR
P1191	P1191 - INLET AIR TEMPERATURE SENSOR RATIONAL/PERFORMANCE
P1192	INLET AIR TEMPERATURE SENSOR CIRCUIT LOW
P1193	INLET AIR TEMPERATURE SENSOR CIRCUIT HIGH

P1451	DIESEL PARTICULATE FILTER SYSTEM PERFORMANCE
P1484	CATALYST OVERHEAT DETECTION
P1507	CRANKCASE FILTER RESTRICTION
P1593	SPEED CONTROL SWITCH 1 STUCK
P1C54	SCR NOx CATALYST MISSING
P1C55	NOx SENSOR INTERMITTENT - BANK 1 SENSOR 1
P1C56	NOx SENSOR INTERMITTENT - BANK 1 SENSOR 2
P1C57	REDUCTANT CONTROL MODULE SHUTDOWN - CRASH EVENT DETECTED
P1C6F	(DIESEL EXHAUST FLUID) REDUCTANT LINE HEATER RELAY CIRCUIT PERFORMANCE
P1C70	SCR ERROR DETECTED - ENGINE DISABLED
P2002	DIESEL PARTICULATE FILTER EFFICIENCY BELOW THRESHOLD
P202A	(DIESEL EXHAUST FLUID) REDUCTANT TANK HEATER CONTROL CIRCUIT OPEN
P202B	(DIESEL EXHAUST FLUID) REDUCTANT TANK HEATER CONTROL CIRCUIT LOW
P202C	(DIESEL EXHAUST FLUID) REDUCTANT TANK HEATER CONTROL CIRCUIT HIGH
P202E	(DIESEL EXHAUST FLUID) REDUCTANT INJECTOR PERFORMANCE
P2032	EXHAUST GAS TEMPERATURE SENSOR CIRCUIT LOW- BANK 1 SENSOR 2
P2033	EXHAUST GAS TEMPERATURE SENSOR CIRCUIT HIGH - BANK 1 SENSOR 2
P203C	(DIESEL EXHAUST FLUID) REDUCTANT LEVEL SENSOR CIRCUIT LOW
P203D	(DIESEL EXHAUST FLUID) REDUCTANT LEVEL SENSOR CIRCUIT HIGH
P203F	(DIESEL EXHAUST FLUID) REDUCTANT LEVEL TOO LOW
P2048	(DIESEL EXHAUST FLUID) REDUCTANT INJECTOR CIRCUIT LOW
P2049	(DIESEL EXHAUST FLUID) REDUCTANT INJECTOR CIRCUIT HIGH
P204A	(DIESEL EXHAUST FLUID) REDUCTANT PRESSURE SENSOR CIRCUIT
P204B	(DIESEL EXHAUST FLUID) REDUCTANT PRESSURE SENSOR CIRCUIT PERFORMANCE
P204C	(DIESEL EXHAUST FLUID) REDUCTANT PRESSURE SENSOR CIRCUIT LOW
P204D	(DIESEL EXHAUST FLUID) REDUCTANT PRESSURE SENSOR CIRCUIT HIGH
P204E	(DIESEL EXHAUST FLUID) REDUCTANT PRESSURE SENSOR CIRCUIT INTERMITTENT
P205B	(DIESEL EXHAUST FLUID) REDUCTANT TANK TEMPERATURE SENSOR CIRCUIT RANGE/PERFORMANCE
P205C	(DIESEL EXHAUST FLUID) REDUCTANT TANK TEMPERATURE SENSOR CIRCUIT LOW
P205D	(DIESEL EXHAUST FLUID) REDUCTANT TANK TEMPERATURE SENSOR

	CIRCUIT HIGH
P205E	(DIESEL EXHAUST FLUID) REDUCTANT TANK TEMPERATURE SENSOR CIRCUIT INTERMITTENT
P207F	REDUCTANT QUALITY PERFORMANCE
P2080	EXHAUST GAS TEMP SENSOR CIRCUIT PERFORMANCE - BANK 1 SENSOR 1
P2084	EXHAUST GAS TEMP SENSOR CIRCUIT PERFORMANCE - BANK 1 SENSOR 2
P208A	(DIESEL EXHAUST FLUID) REDUCTANT PUMP CONTROL CIRCUIT OPEN
P208B	(DIESEL EXHAUST FLUID) REDUCTANT PUMP PERFORMANCE
P208C	(DIESEL EXHAUST FLUID) REDUCTANT PUMP CONTROL CIRCUIT LOW
P208D	(DIESEL EXHAUST FLUID) REDUCTANT PUMP CONTROL CIRCUIT HIGH
P209F	(DIESEL EXHAUST FLUID) REDUCTANT TANK HEATER CONTROL CIRCUIT PERFORMANCE
P20A0	(DIESEL EXHAUST FLUID) REDUCTANT PURGE CONTROL VALVE CIRCUIT OPEN
P20A2	(DIESEL EXHAUST FLUID) REDUCTANT PURGE CONTROL VALVE CIRCUIT LOW
P20A3	(DIESEL EXHAUST FLUID) REDUCTANT PURGE CONTROL VALVE CIRCUIT HIGH
P20B0	(DIESEL EXHAUST FLUID) REDUCTANT PUMP TEMPERATURE PERFORMANCE
P20B2	(DIESEL EXHAUST FLUID) REDUCTANT HEATER CONTROL VALVE PERFORMANCE
P20B5	(DIESEL EXHAUST FLUID) REDUCTANT PUMP HEATER CONTROL CIRCUIT OPEN
P20B7	(DIESEL EXHAUST FLUID) REDUCTANT PUMP HEATER CONTROL CIRCUIT LOW
P20B8	(DIESEL EXHAUST FLUID) REDUCTANT PUMP HEATER CONTROL CIRCUIT HIGH
P20BD	(DIESEL EXHAUST FLUID) REDUCTANT PRESSURE LINE HEATER CONTROL CIRCUIT/OPEN
P20BE	(DIESEL EXHAUST FLUID) REDUCTANT PRESSURE LINE HEATER CONTROL CIRCUIT PERFORMANCE
P20BF	(DIESEL EXHAUST FLUID) REDUCTANT PRESSURE LINE HEATER CONTROL CIRCUIT LOW
P20C0	(DIESEL EXHAUST FLUID) REDUCTANT PRESSURE LINE HEATER CONTROL CIRCUIT HIGH
P20C1	(DIESEL EXHAUST FLUID) REDUCTANT RETURN LINE HEATER CONTROL CIRCUIT/OPEN
P20C3	(DIESEL EXHAUST FLUID) REDUCTANT RETURN LINE HEATER CONTROL CIRCUIT LOW
P20C4	(DIESEL EXHAUST FLUID) REDUCTANT RETURN LINE HEATER CONTROL CIRCUIT HIGH

P20C6	(DIESEL EXHAUST FLUID) REDUCTANT HEATER D CONTROL PERFORMANCE
P20E8	(DIESEL EXHAUST FLUID) REDUCTANT PRESSURE TOO LOW
P20E9	(DIESEL EXHAUST FLUID) REDUCTANT PRESSURE TOO HIGH
P20EC	SCR NOx CATALYST - OVER TEMPERATURE BANK 1
P20EE	SCR NOx CATALYST EFFICIENCY BELOW THRESHOLD - BANK 1
P20FE	(DIESEL EXHAUST FLUID) REDUCTANT METERING UNIT PERFORMANCE
P20FF	(DIESEL EXHAUST FLUID) REDUCTANT CONTROL MODULE PERFORMANCE
P2121	ACCELERATOR PEDAL POSITION SENSOR 1 PERFORMANCE
P2122	ACCELERATOR PEDAL POSITION SENSOR 1 CIRCUIT LOW
P2123	ACCELERATOR PEDAL POSITION SENSOR 1 CIRCUIT HIGH
P2127	ACCELERATOR PEDAL POSITION SENSOR 2 CIRCUIT LOW
P2128	ACCELERATOR PEDAL POSITION SENSOR 2 CIRCUIT HIGH
P214A	SCR NOx CATALYST INLET TEMPERATURE TOO HIGH
P214B	SCR NOx CATALYST INLET TEMPERATURE TOO HIGH DURING PARTICULATE FILTER REGENERATION
P214C	SCR NOx CATALYST OUTLET TEMPERATURE TOO HIGH
P214D	SCR NOx CATALYST OUTLET TEMPERATURE TOO HIGH DURING PARTICULATE FILTER REGENERATION
P21C2	(DIESEL EXHAUST FLUID) REDUCTANT LINE HEATER RELAY CONTROL CIRCUIT OPEN
P21C3	(DIESEL EXHAUST FLUID) REDUCTANT LINE HEATER RELAY CONTROL CIRCUIT LOW
P21C4	(DIESEL EXHAUST FLUID) REDUCTANT LINE HEATER RELAY CONTROL CIRCUIT HIGH
P2201	AFTERTREATMENT NOx SENSOR CIRCUIT PERFORMANCE - BANK 1 SENSOR 1
P2202	AFTERTREATMENT NOx SENSOR CIRCUIT - BANK 1 SENSOR 1
P2209	NOx SENSOR HEATER CIRCUIT PERFORMANCE - BANK 1 SENSOR 1
P220A	NOx SENSOR SUPPLY CIRCUIT PERFORMANCE - BANK 1 SENSOR 1
P220B	NOx SENSOR SUPPLY CIRCUIT PERFORMANCE - BANK 1 SENSOR 2
P2227	BAROMETERIC PRESSURE SENSOR RATIONALITY
P2228	BAROMETRIC PRESSURE CIRCUIT LOW
P2229	BAROMETRIC PRESSURE CIRCUIT HIGH
P2262	TURBOCHARGER BOOST PRESSURE NOT DETECTED - MECHANICAL
P2266	WATER IN FUEL SENSOR CIRCUIT LOW
P2267	WATER IN FUEL SENSOR CIRCUIT HIGH
P2269	WATER IN FUEL CONDITION
P226B	TURBOCHARGER BOOST PRESSURE NOT RESPONDING
P226C	TURBOCHARGER BOOST CONTROL "A" SLOW RESPONSE

P2280	AIR FLOW RESTRICTION / LEAK BETWEEN AIR CLEANER AND MAF
P2281	AIR LEAK BETWEEN MAF AND THROTTLE BODY
P2299	BRAKE PEDAL POSITION / ACCELERATOR PEDAL POSITION INCOMPATIBLE
P229E	AFTERTREATMENT NOx SENSOR CIRCUIT - BANK 1 SENSOR 2
P229F	AFTERTREATMENT NOx SENSOR CIRCUIT PERFORMANCE - BANK 1 SENSOR 2
P22A7	NOx SENSOR HEATER CIRCUIT PERFORMANCE - BANK 1 SENSOR 2
P240F	EGR SLOW RESPONSE
P242B	EXHAUST GAS TEMP SENSOR CIRCUIT PERFORMANCE - BANK 1 SENSOR 3
P242C	EXHAUST GAS TEMPERATURE SENSOR CIRCUIT LOW- BANK 1 SENSOR 3
P242D	EXHAUST GAS TEMPERATURE SENSOR CIRCUIT HIGH - BANK 1 SENSOR 3
P242F	DIESEL PARTICULATE FILTER RESTRICTION - ASH ACCUMULATION
P244A	DIESEL PARTICULATE FILTER DIFFERENTIAL PRESSURE TOO LOW
P244D	EXHAUST TEMPERATURE TOO HIGH FOR PARTICULATE FILTER REGENERATION
P2453	DIESEL PARTICULATE FILTER PRESSURE SENSOR A CIRCUIT PERFORMANCE
P2454	DIESEL PARTICULATE FILTER PRESSURE SENSOR A CIRCUIT LOW
P2455	DIESEL PARTICULATE FILTER PRESSURE SENSOR A CIRCUIT HIGH
P2457	EXHAUST GAS RECIRCULATION COOLING SYSTEM PERFORMANCE
P2459	DIESEL PARTICULATE FILTER REGENERATION TOO FREQUENT
P2463	DIESEL PARTICULATE FILTER - SOOT ACCUMULATION
P246F	EXHAUST GAS TEMP SENSOR CIRCUIT PERFORMANCE - BANK 1 SENSOR 4
P2470	EXHAUST GAS TEMPERATURE SENSOR CIRCUIT LOW - BANK 1 SENSOR 4
P242D	EXHAUST GAS TEMPERATURE SENSOR CIRCUIT HIGH - BANK 1 SENSOR 4
P249C	EXCESSIVE TIME TO ENTER CLOSED LOOP SCR REDUCTANT INJECTION CONTROL
P249E	CLOSED LOOP SCR REDUCTANT INJECTION CONTROL AT LIMIT - FLOW TOO HIGH
P249F	EXCESSIVE TIME TO ENTER CLOSED LOOP DPF REGENERATION CONTROL
P24A0	CLOSED LOOP DPF REGENERATION CONTROL AT LIMIT - TEMPERATURE TOO LOW
P2503	CHARGING SYSTEM OUTPUT LOW
P2504	CHARGING SYSTEM OUTPUT HIGH
P2509	PCM/PCM POWER INPUT SIGNAL INTERMITTENT

P2563	TURBOCHARGER BOOST CONTROL POSITION SENSOR PERFORMANCE
P2579	TURBOCHARGER SPEED SENSOR CIRCUIT PERFORMANCE
P2580	TURBOCHARGER SPEED SENSOR CIRCUIT LOW
P2609	INTAKE AIR HEATER SYSTEM PERFORMANCE
P268C	CYLINDER 1 INJECTOR DATA INCOMPATIBLE
P268D	CYLINDER 2 INJECTOR DATA INCOMPATIBLE
P268E	CYLINDER 3 INJECTOR DATA INCOMPATIBLE
P268F	CYLINDER 4 INJECTOR DATA INCOMPATIBLE
P2690	CYLINDER 5 INJECTOR DATA INCOMPATIBLE
P2691	CYLINDER 6 INJECTOR DATA INCOMPATIBLE
P2BAC	NOx EXCEEDANCE - DEACTIVATION OF EGR
U0001	CAN C BUS
U0101	LOST COMMUNICATION WITH TCM
U010C	LOST COMMUNICATION WITH TURBOCHARGER/SUPERCHARGER CONTROL MODULE
U010E	LOST COMMUNICATION WITH DIESEL EXHAUST FLUID CONTROL UNIT
U0121	LOST COMMUNICATION WITH ANTI-LOCK BRAKE MODULE
U0141	LOST COMMUNICATION WITH IPM (FCM/TIPM)
U029D	LOST COMMUNICATION WITH NOx SENSOR "A"
U029E	LOST COMMUNICATION WITH NOx SENSOR "B"
U040F	INVALID DATA RECEIVED FROM REDUCTANT CONTROL MODULE
U059E	INVALID DATA RECEIVED FROM NOx SENSOR "A"
U059F	INVALID DATA RECEIVED FROM NOx SENSOR "B"
U11C1	LOST COMMUNICATION WITH DIESEL EXHAUST FLUID CONTROL UNIT
U1403	IMPLAUSIBLE FUEL LEVEL SIGNAL RECEIVED
U1412	IMPLAUSIBLE VEHICLE SPEED SIGNAL RECEIVED
U1421	IMPLAUSIBLE IGNITION KEY OFF TIME RECEIVED
U1601	ECU APPLICATION SOFTWARE CODE 1 MISSING OR CORRUPTED

STANDARD PROCEDURE

DIESEL AFTERTREATMENT VALIDATION- 6.7L

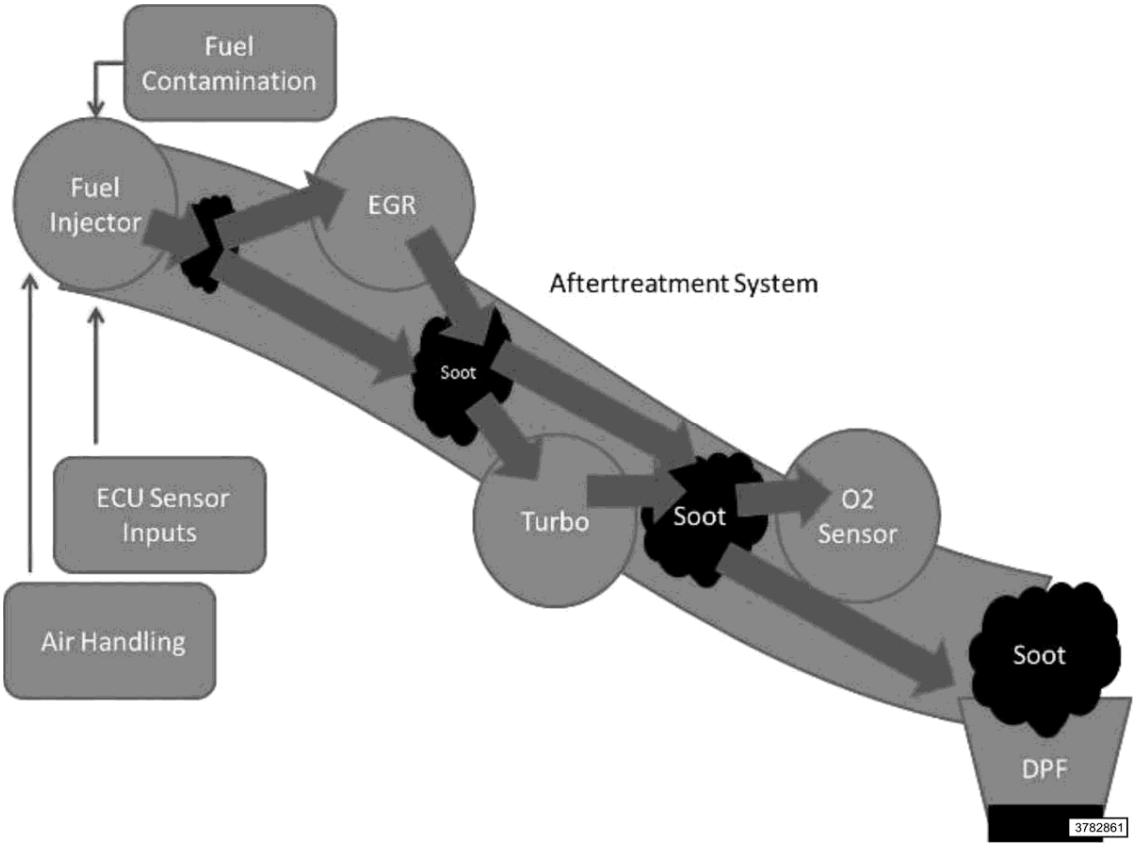

Fig. 1: Diesel Aftertreatment System Diagram
Courtesy of CHRYSLER GROUP, LLC

SOOT GENERATION CAUSES AND EFFECTS

When trying to understand the functionality of the exhaust and aftertreatment system, (more precisely the effects on the Diesel Particulate Filter (DPF)) you must think in terms of standard plumbing principals. Everything flows downstream. Systems and components along the path are affected by the soot in the exhaust, and these components can also contribute to the soot levels (cause and effect).

This overview will attempt to elaborate on the causes and effects of the Soot flowing downstream in the system. The soot originates in the combustion chamber as a by-product of the combustion process. This is the beginning of the stream. All soot generated in the combustion chamber flows downstream. Excessive amounts of soot can be caused by faulty inputs to the engine controller, air handling system leaks or restrictions, fuel contamination, or fuel injectors. Some soot will always be generated. Under proper operating conditions, soot levels will be low

and very manageable.

The next component downstream is the EGR. The EGR can be affected by soot coming from the combustion process. The soot can cause the EGR to stick open or closed, or become restricted. If the EGR malfunctions, it can cause soot generation which is then added to system.

The next component downstream is the Turbocharger. The Turbocharger can be affected by soot coming from the combustion process and/or the EGR. If the Turbocharger malfunctions (sticks, or leaks oil or coolant internally), it can cause soot generation which is then added to system.

The next components found downstream are the O2 Sensors. The O2 Sensors can be affected by soot coming from the combustion process, the EGR, and/or the Turbocharger. If an O2 Sensor malfunctions, it can cause (to a much lesser extent) soot generation which is added to system. O2 Sensor codes can be caused by excessive soot.

ALL of the soot generated upstream will land in the DPF. If a vehicle sets a DPF DTC, such as P1451 or P242F, which are related to the calculated amount of soot currently caught in the DPF this means the engine controller has calculated that the DPF is getting full. This number is and estimation, hence the name; "Estimated Soot Load Based on Delta" (ESL/D) and is measured in grams. Sometimes soot levels will be estimated high and set faults and there is little soot in the DPF!

When a DPF fault sets, it is important to root cause the reason the soot landed in the filter and could not be removed through a normal regeneration. Is fuel contamination the issue causing injectors to stick and over fuel? Is the EGR or Turbocharger sticking causing excess soot? Or is it a combination of these?

A DPF should NEVER be replaced without first determining if there is another root cause of the source of the high "Estimated Soot Load Based on Delta" and repairing this issue also. A DPF should also not be replaced without performing the AFTERTREATMENT INSPECTION GUIDELINE procedure. This will visually show you with examples how to determine if replacement of an aftertreatment component is necessary.

DIAGNOSTIC TEST

1. **VALIDATION**
    1. Before starting the validation, confirm on the scan tool that the engine is still at an operating temperature of 180°F (82°C).

        NOTE: **The following procedure will provide the necessary drive cycle to allow the PCM to learn normal system operation and the ability to detect most aftertreatment sooting issues. It is not necessary to have a technician perform the 50 minute drive cycle however, the technician must verify Estimated Soot Load Based on Delta" (ESL/D), measured in Grams while driving the vehicle at a steady state speed. The technician will monitor the scan tool while another person drives the vehicle.**

    2. The technician must perform a short light load steady state drive cycle to ensure the vehicle will operate normally and allow a passive regeneration if necessary during the next step. During the

drive cycle monitor Estimated Soot Load Based on Delta" (ESL/D), measured in Grams for a short period to ensure that the Diesel Particulate Filter (DPF) will not plug during the next steps. In addition, illumination of the MIL during the drive cycle indicates that further diagnosis may be required before proceeding.

NOTE: **If the soot load threshold for a P242F DTC is reached during this short drive cycle, the mil will illuminate and passive regeneration will not occur.**

3. Record the mileage from the vehicle odometer into section 4D "After Treatment Validation Test" of the Diesel Diagnostic Worksheet step 1.
4. Have an associate (porter) drive at the vehicle least 50 minutes at a steady state speed so the RPM is maintained at about 1900. If highway access is not available, use a lower gear on surface streets. A steady throttle is important. Use cruise control if possible.
5. Once the initial 50 minute drive cycle is complete, return to the repair shop and record the mileage from the vehicle odometer into section 4D "After Treatment Validation Test" of the Diesel Diagnostic Worksheet step 2. Turn the ignition key to OFF.
6. Have the associate restart the engine and record the key cycle event into step 3 of section 4D "After Treatment Validation Test" of the Diesel Diagnostic Worksheet.
7. The technician will ride in the passenger seat while monitoring the scan tool. Monitor "Estimated Soot Load Based on Delta" (ESL/D), measured in Grams.
8. Drive the vehicle and maintain steady engine speed of 1800 - 1900 RPM. Use cruise control if possible, (steady throttle pressure).
9. ESL/D should maintain steady or even start to decrease slowly even though truck is NOT in deSoot mode. This is because the latest software may actually "scrub" soot when driving at higher speeds.
10. Ensure vehicle is operating in "Normal" mode. (Not in desoot, desox or denox mode).
11. Take a reading of the ESL/D. Record the ESLD into step 4 of section 4D "After Treatment Validation Test" of the Diesel Diagnostic Worksheet and continue to drive for 10 minutes.
12. Record that the 10 minute drive cycle has been completed in step 5 of section 4D "After Treatment Validation Test" of the Diesel Diagnostic Worksheet.
13. After 10 minutes, take another reading of the ESL/D and record this number in step 6 of section 4D "After Treatment Validation Test" of the Diesel Diagnostic Worksheet.
14. Step 7 of section 4D "After Treatment Validation Test" of the Diesel Diagnostic Worksheet will automatically calculate the estimated soot load difference.
15. Step 8 of section 4D "After Treatment Validation Test" of the Diesel Diagnostic Worksheet will automatically PASS or FAIL based upon results of step 7 of section 4D "After Treatment Validation Test" of the Diesel Diagnostic Worksheet.

Did the ESL/D test pass?

Yes

- Vehicle is properly repaired.

No

- Vehicle is NOT repaired completely. Return back to the test that sent you here or continue diagnosing the vehicle with the ENGINE MISFIRE/RUNS ROUGH/POOR PERFORMANCE test procedure. Refer to **DIAGNOSIS AND TESTING, 6.7L** .

MIL LIGHT ON PRETEST PROCEDURE

For a complete wiring diagram, **Refer to appropriate SYSTEM WIRING DIAGRAMS article** .

DIAGNOSTIC TEST

1. **FUEL SYSTEM, AIR HANDLING, OR AFTERTREATMENT RELATED DTCS PRESENT**

   CAUTION: Inspect for aftermarket engine components on the vehicle (including labels indicating aftermarket software). If equipped with aftermarket components or software, the vehicle must be returned to OEM specifications.

   1. With the scan tool, read and record all DTCs active and stored.

      Are any one or more of the following DTCs present (P000F, P0087, P0402, P042E, P0489, P1011, P1451, P2262, P226B, P242F, P245A, P2563)?

      Yes

      - Go To 2.

      No

      - Go To 5.
2. **VISUALLY INSPECT FOR SIGNS OF AFTERMARKET COMPONENTS**
   1. Inspect for aftermarket engine components on the vehicle (including labels indicating aftermarket software).

      NOTE: If equipped with aftermarket components or software, the vehicle must be returned to OEM specifications.

      Is the vehicle equipped with aftermarket performance software/parts?

      Yes

      - Performance enhancing software/parts may be the root cause of the customers concern. Performance enhancing software should be removed and the vehicle returned to stock before proceeding.
      - Go To 3.

No

- Go To 3.

3. **REVIEW VEHICLE WARRANTY HISTORY**
   1. Review vehicle warranty history and/or previously authorized Diesel Diagnostic Worksheets to determine if the vehicle has returned for a repeat repair.

      Has the vehicle returned within the last 90 days for a repeat with any of the following DTCs present, P000F, P0087, P0402, P042E, P0489, P1011, P1451, P2262, P226B, P242F, P245A, P2563?

      Yes

      - Perform the DIESEL FUEL CONTAMINATION AND CLEANING PROCEDURE. Refer to **DIESEL FUEL SYSTEM CLEANING PROCEDURE** .

      No

      - Go To 4.

4. **VISUALLY INSPECT FOR EXTERNAL SIGNS OF FUEL CONTAMINATION**
   1. Inspect the vehicle for the following conditions:
      - Review the vehicles repair history and verify proper Fuel Filter maintenance intervals have been followed.
      - Auxiliary fuel tank that is CONNECTED to the vehicles fuel system or used as a STORAGE tank to fill the truck.
      - Fuel stains on outside and inside of truck box/bed. This may be in indication that the driver is fueling the vehicle from an auxiliary source.
      - Inspect the fuel filler cap, filler tube, and fuel filler cavity for signs of dirt and possible overfilling. Most auxiliary fuel tanks do not contain automatic shut off filler valves which may lead to over filling of the fuel tank.
      - Inspect the top of the vehicles fuel tank for excessive oily dirt stains. Sometimes, gravity feed auxiliary fuel tank installers may feed the vehicles fuel tank from the auxiliary tank through the fuel tank vent valves.
      - Inspect the fuel tank vent valves for signs of dirt or moisture contamination.
      - Both P1451 AND P242F are the ONLY DTCs present.

      Were any of the above conditions noted?

      Yes

      - Perform the DIESEL FUEL CONTAMINATION AND CLEANING PROCEDURE. Refer to **DIESEL FUEL SYSTEM CLEANING PROCEDURE** .

      No

- Go To 5.

5. **CHECK FOR TSBs/SOFTWARE FLASHES**
    1. Check for any TSBs/Software Flashes that may apply.

       Were any TSBs/Software Flashes found and did they repair the problem?

       Yes

       - Repair complete.
       - Perform POWERTRAIN VERIFICATION TEST - 6.7L. Refer to **POWERTRAIN VERIFICATION TEST - 6.7L** .

       No

       - Perform the diagnostic trouble code test that was found to be present. Refer to **DIAGNOSTIC CODE INDEX** .

PRE-DIAGNOSTIC TROUBLESHOOTING PROCEDURE - 6.7L

For a complete wiring diagram, **Refer to appropriate SYSTEM WIRING DIAGRAMS article** .

DIAGNOSTIC TEST

1. **NO RESPONSE**
    1. Make sure the scan tool will communicate with the appropriate modules.

       Are you currently experiencing a NO RESPONSE condition?

       Yes

       - The NO RESPONSE condition must be properly diagnosed before continuing.
       - Perform the appropriate BUS Communication test . Refer to **DIAGNOSIS AND TESTING** .

       No

       - Go To 2.
2. **DTC PRESENT**

   NOTE: **Before continuing, complete the 6.7L Cummins Turbo Diesel Diagnostic Worksheet. Go to the TechConnect > submit the vehicle's VIN number > Search Tab > and Select Create Diagnostic Worksheet.**

    1. Turn the ignition on.
    2. With the scan tool, view PCM for DTCs.

Is there a DTC present?

Yes

- Proceed to the MIL LIGHT ON PRETEST PROCEDURE. Refer to **MIL LIGHT ON PRETEST PROCEDURE** .

No

- Go To 3.

3. **CHECK FOR SYMPTOM BASED ISSUES**
   1. Check the vehicle for one of the following conditions:
      - Engine No Start / Hard Start
      - Engine Misfires / Runs Rough / Poor Performance
      - Engine Noise
      - Excessive Smoke (Black/Blue/White)

      Do one of the following conditions exist?

      Yes

      - Perform the appropriate symptom based diagnostic procedure. Refer to **DIAGNOSIS AND TESTING, 6.7L** .

      No

      - Verify the vehicles performance by performing the Diesel Fuel System Validation procedure. Refer to **DIESEL AFTERTREATMENT VALIDATION- 6.7L** .

PCM/ECM / TCM PROGRAMMING

PCM/ECM / TCM FLASH PROGRAMING

This procedure will need to be done when one or more of the following situations are true:

1. A vehicle's Powertrain Control Module/Engine Control Module (PCM/ECM) has been replaced.
2. A diagnostic trouble code (DTC) is set P1602 - PCM/ECM Not Programmed.
3. An updated calibration or software release is available for either the PCM/ECM or TCM ECUs.

This procedure assumes that the wiTECH™ Vehicle Connection Interface (VCI) pod, StarSCAN® and StarMOBILE® devices are configured to your dealership's network with either a wired or wireless connection. The wiTECH™ VCI pod, StarSCAN® and StarMOBILE® must also be running at the latest operating system and software release level. For more help on how to network your StarSCAN® or StarMOBILE® reference the StarSCAN® / StarMOBILE® Quick Start Networking Guide available on 'DealerCONNECT > Service > StarSCAN® and StarMOBILE® Tools > Online Documentation' or at www.dcctools.com, under the Download

Center. For the wiTECH™ VCI pod use the "HELP" tab in the wiTECH™ Diagnostic Application.

TABLE OF CONTENTS

SECTION 1 - PCM/ECM / TCM FLASH PROCEDURE

If using StarSCAN® or StarMOBILE® Desktop Client. Go to **REPAIR PROCEDURE - USING STARSCAN® OR STARMOBILE® DESKTOP CLIENT**.

If using wiTECH™ Diagnostic Application. Go to **REPAIR PROCEDURE - WITECH™ DIAGNOSTIC APPLICATION**.

REPAIR PROCEDURE - USING STARSCAN® OR STARMOBILE® DESKTOP CLIENT

NOTE: If this flash process is interrupted or aborted, the flash should be restarted.

1. Open the hood of the vehicle and install a battery charger. Verify that the charging rate provides a continuous charge of 13.2 - 13.5 Volts.
2. Connect the StarSCAN® or StarMOBILE® to the vehicle data link connector located under the steering column and turn the ignition key to the "RUN" position.
3. Power on the StarSCAN® or StarMOBILE®. If the StarMOBILE® is being used, launch the StarMOBILE® Desktop Client and connect to the appropriate StarMOBILE® device.
4. Retrieve the old ECU part number. From the tool's Home screen,
   a. Select "ECU View"
   b. Select "PCM/ECM"
   c. Select "More Options"
   d. Select "ECU Flash"
   e. Record the part number at the top of the Flash PCM/ECM screen for later reference.
5. Program the ECU as follows:
   a. Using the StarSCAN® / StarMOBILE® at the Home screen, select "ECU View"
   b. Select "PCM/ECM"
   c. Select "More Options"
   d. Select "ECU Flash"
   e. Select "Browse for New File" and follow the on screen instructions
   f. Highlight the appropriate calibration based on the part number recorded in Step 4e , or by using Year/Model/Engine and appropriate emissions selection for the vehicle being worked on
   g. Select "Download to Client/Scantool"

h. Once the download is complete, select "Close" and then "Back"
i. Highlight the listed calibration, select "Update Controller" and follow the on screen instructions
j. When the PCM/ECM update is complete, select "OK"
k. Verify that the part number at the top of the Flash PCM/ECM screen has updated to the new part number

NOTE: If this flash process is interrupted or aborted, the flash should be restarted.

6. Continue to complete the process if the ECU has been replaced.
7. Type the necessary information on the "Authorized Modification Label" (p/n 04275086AB) and attach near the VECI label (See Section 3 for details). Refer to **SECTION 3 - AUTHORIZED MODIFICATION LABEL**.

REPAIR PROCEDURE - WITECH™ DIAGNOSTIC APPLICATION

NOTE: If this flash process is interrupted or aborted, the flash should be restarted.

1. Open the hood of the vehicle and install a battery charger. Verify that the charging rate provides a continuous charge of 13.2 - 13.5 Volts.
2. Connect the wiTECH™ Vehicle Connection Interface (VCI) pod to the vehicle data link connector located under the steering column and turn the ignition key to the "RUN" position.
3. Launch the wiTECH™ Diagnostic Application and connect to the appropriate wiTECH™ device.
4. From the wiTECH™ Diagnostic Application Home screen,
    1. Select "HELP"
    2. Select "HELP CONTENTS"
    3. Follow the "HELP TOPIC" for flashing an ECU.

SECTION 2 - ADDITIONAL PCM/ECM / TCM REPLACEMENT PROCEDURES

NOTE: Find the PCM/ECM /TCM Type for the vehicle, read and write down the steps, and then go to the step by step instructions for additional information on how to perform these procedures. Refer to STEP-BY-STEP INSTRUCTIONS.

If a 2.0L Controller was replaced, navigate to "Misc. Functions" and perform all applicable routines:

NOTE: The available routines may vary depending on model and year of vehicle.

1. PCM/ECM Replaced - Located within the Security Module
2. ECU Replacement With Value Transfer - if the ECU to be replaced is still responsive

NOTE: If the PCM/ECM data transfer is able to be completed, it may not be necessary to perform routines 7 - 9.

3. ECU Replacement Without Value Transfer - if the ECU to be replaced is NOT responsive
4. Verify PCM/ECM VIN
5. Injector Quantity Adjustment
6. Program Variant Code
7. Service Diesel Particulate Filter Regeneration
8. Reset Zero Fuel
9. Reset of Lambda Values

If a PT Cruiser, 2.2L Controller was replaced, navigate to "Misc. Functions" and perform all applicable routines:

NOTE: The available routines may vary depending on model and year of vehicle.

1. PCM/ECM Replaced - Located within the Security Module
2. Injector Quantity Adjustment - Only on 06 PT AND up
3. IMA Rapid Calibration Test - Only on 06 PT AND up

If a 3.0L Controller was replaced, navigate to "Misc. Functions" and perform all applicable routines:

NOTE: The available routines may vary depending on model and year of vehicle.

1. PCM/ECM Replaced - Located within the Security Module
2. ECU Replacement With Value Transfer - if the ECU to be replaced is still responsive

NOTE: If the PCM/ECM data transfer is able to be completed, it may not be necessary to perform routines 7 - 12.

3. ECU Replacement Without Value Transfer - if the ECU to be replaced is NOT responsive
4. Injector Quantity Adjustment
5. Program Variant Code
6. Verify PCM/ECM VIN
7. Diesel Particulate Filter (Used) Learning
8. Reset of Lambda Values
9. Reset Zero Fuel
10. NOx Catalyst (New) Initialization
11. IMA Rapid Calibration Test
12. Fuel Mean Value Adaptation Initialization
13. Exhaust Throttle Plate Adaptive Learn Position

If a 2.8L Controller was replaced, navigate to "Misc. Functions" and perform all applicable routines:

NOTE: The available routines may vary depending on model and year of vehicle.

1. PCM/ECM Replaced - Located within the Security Module
2. ECU Replacement With Value Transfer - if the ECU to be replaced is still responsive

NOTE: If the PCM/ECM data transfer is able to be completed, it may not be necessary to perform routines 6 - 8.

3. ECU Replacement Without Value Transfer - if the ECU to be replaced is NOT responsive
4. Injector Quantity Adjustment
5. Program Variant Code
6. Fuel Mean Value Adaptation Initialization
7. IMA Rapid Calibration Test
8. Set Oil Dilution Mass Value

If a PM/MK, 2.2L Controller was replaced, navigate to "Misc. Functions" and perform all applicable routines:

NOTE: The available routines may vary depending on model and year of vehicle.

1. PCM/ECM Replaced - Located within the Security Module
2. Engine ECU Replacement

NOTE: If the PCM/ECM data transfer is able to be completed, it may not be necessary to perform routines 5 - 10.

3. Injector Quantity Adjustment
4. Program Variant Code
5. Swirl Control Learn
6. Throttle Valve Learn
7. VGT Learn
8. MAF Sensor Replace
9. O2 Sensor Replace
10. Used DPF initialize

If a 5.9L Controller was replaced, navigate to "Misc. Functions" and perform all applicable routines:

NOTE: The available routines may vary depending on model and year of vehicle.

1. PCM/ECM Replaced - Located within the Security Module
2. Check PCM/ECM VIN - if NOT WCM equipped

If a 6.7L Controller was replaced, navigate to "Misc. Functions" and perform all applicable routines:

NOTE: The available routines may vary depending on model and year of vehicle.

1. PCM/ECM Replaced - Located within the Security Module
2. Injector Quantity Adjustment
3. Enable / Disable Vehicle Features - need to enable features
4. Set max vehicle speed
5. Set max cruise speed
6. Idle shutdown timer
7. PTO RPM adjustment
8. Set PTO Max vehicle speed

NOTE: **The numbers can be retrieved from the old PCM/ECM using the scan tool if the PCM/ECM is still functional or they may be retrieved from the Fuel Injectors themselves. The numbers are stamped on the intake manifold side of the injectors.**

9. Reset Regenerative Filter Timers

TCM Replacement:

If an Aisin TCM was replaced, perform the following additional steps and/or routines:

If an EATX TCM was replaced, perform the following additional steps and/or routines:

If an NGC3 TCM ONLY was replaced, perform the following additional steps and/or routines:

If an NGC4 TCM ONLY was replaced, perform the following additional steps and/or routines:

1. Quicklearn

If an EGS TCM was replaced, perform the following additional steps and/or routines:

1. Initialize EGS

STEP-BY-STEP INSTRUCTIONS

PCM/ECM Replaced

The vehicle PIN (Personal Identification Number) will be required to complete the routine. This information may be obtained in three ways:

1. The original selling invoice
2. DealerCONNECT > Parts > Key Codes
3. Contacting the District Manager.

From the "Home" screen, select "ECU View"

- Select the applicable Security Module
- Select "Misc. Functions"
- Select "PCM/ECM Replaced" and follow the on screen instructions.
- When complete, select "Finish"

Check PCM VIN

From the "Home" screen, select "ECU View"

- Select "PCM/ECM"
- Select "Misc. Functions"
- Select "Check PCM/ECM VIN" and follow the on screen instructions.
- When complete, select "Finish"

Diesel Particulate Filter (Used) Learning

From the "Home" screen, select "ECU View"

- Select "PCM/ECM"
- Select "Misc. Functions"
- Select "Diesel Particulate Filter (Used) Learning" and follow the on screen instructions.
- When complete, select "Finish"

ECU Replacement with Value Transfer

From the "Home" screen, select "ECU View"

- Select "PCM/ECM"
- Select "Misc. Functions"
- Select "ECU Replacement with Value Transfer" and follow the on screen instructions.
- When complete, select "Finish"

ECU Replacement without Value Transfer

From the "Home" screen, select "ECU View"

- Select "PCM/ECM"
- Select "Misc. Functions"
- Select "ECU Replacement without Value Transfer" and follow the on screen instructions.
- When complete, select "Finish"

Enable / Disable Vehicle Features

From the "Home" screen, select "ECU View"

- Select "PCM/ECM"
- Select "Misc. Functions"
- Select "Enable / Disable Vehicle Features" and follow the on screen instructions.
- When complete, select "Finish"

Exhaust Throttle Plate Adaptive Learn Position

From the "Home" screen, select "ECU View"

- Select "PCM/ECM"
- Select "Misc. Functions"
- Select "Exhaust Throttle Plate Adaptive Learn Position" and follow the on screen instructions.
- When complete, select "Finish"

Fuel Mean Value Adaptation Initialization

From the "Home" screen, select "ECU View"

- Select "PCM/ECM"
- Select "Misc. Functions"
- Select "Fuel Mean Value Adaptation Initialization" and follow the on screen instructions.
- When complete, select "Finish"

IMA Rapid Calibration

From the "Home" screen, select "ECU View"

- Select "PCM/ECM"
- Select "Misc. Functions"
- Select "IMA Rapid Calibration Test" and follow the on screen instructions.
- When complete, select "Finish"

Initialize EGS

From the "Home" screen, select "ECU View"

- Select "PCM/ECM"
- Select "Misc. Functions"
- Select "Initialize EGS" and follow the on screen instructions.
- When complete, select "Finish"

Injector Quantity Adjustment

From the "Home" screen, select "ECU View"

- Select "PCM/ECM"
- Select "Misc. Functions"
- Select "Injector Quantity Adjustment" and follow the on screen instructions.
- When complete, select "Finish"

Mobile DeSoot - NO Minimum Required Soot Load

From the "Home" screen, select "ECU View"

- Select "PCM/ECM"
- Select "Misc. Functions"
- Select "Mobile DeSoot - NO Minimum Required Soot Load" and follow the on screen instructions.
- When complete, select "Finish"

NOx Catalyst (New) Initialization

From the "Home" screen, select "ECU View"

- Select "PCM/ECM"
- Select "Misc. Functions"
- Select "NOx Catalyst (New) Initialization" and follow the on screen instructions.
- When complete, select "Finish"

Program Variant Code

From the "Home" screen, select "ECU View"

- Select "PCM/ECM"
- Select "Misc. Functions"
- Select "Program Variant Code" and follow the on screen instructions.
- When complete, select "Finish"

Quicklearn

From the "Home" screen, select "ECU View"

- Select "PCM/ECM"
- Select "Misc. Functions"
- Select "Quicklearn" and follow the on screen instructions.

- When complete, select "Finish"

Reset Regenerative Filter Timers

From the "Home" screen, select "ECU View"

- Select "PCM/ECM"
- Select "Misc. Functions"
- Select "Reset Regenerative Filter Times" and follow the on screen instructions.
- When complete, select "Finish"

Set Oil Dilution Mass Value

From the "Home" screen, select "ECU View"

- Select "PCM/ECM"
- Select "Misc. Functions"
- Select "Set Oil Dilution Mass Value" and follow the on screen instructions.
- When complete, select "Finish"

SECTION 3 - AUTHORIZED MODIFICATION LABEL

NOTE: The following step is required by law when reprogramming a PCM/ECM and/or TCM.

Type the necessary information on the "Authorized Modification Label" and attach near the VECI label.

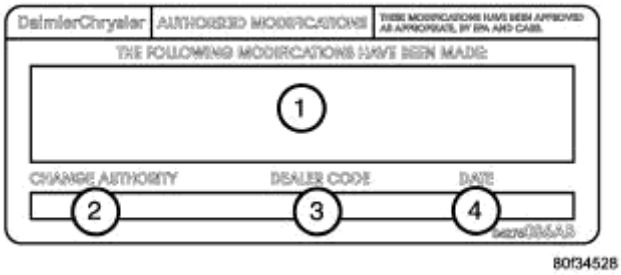

Fig. 2: Authorized Modification Label
Courtesy of CHRYSLER GROUP, LLC

1. Powertrain Control / Transmission Control Module Part Numbers (Insert P/Ns) Used
2. Change Authority: TSB XX--XX
3. Dealer Code: XXXXX
4. Date: XX-XX-XX

REQUIRED TOOLS / EQUIPMENT:

StarSCAN®	StarMOBILE®	wiTECH™
Battery Charger	Battery Charger	Battery Charger
StarSCAN® Tool Kit	StarMOBILE® Tool Kit	wiTECH™ Tool Kit
StarSCAN® Vehicle Cable	StarMOBILE® Vehicle Cable	wiTECH™ Vehicle Cable
	TechCONNECT PC or equivalent	TechCONNECT PC or equivalent
		wiTECH™ Diagnostic Application

TECH TIPS AND INFORMATION:

CAUTION: Extreme care must be taken when programming a calibration into a generic PCM. Do not randomly select a calibration. Once a calibration is selected and programmed, the controller cannot be reprogrammed to a different calibration. The module can only be reprogrammed to a more recent version of that calibration.

1. The wiTECH™ Diagnostic Application is the preferred method for flashing any Chrysler vehicle ECU. For more information, training tutorials are available under the "HELP" tab in the wiTECH™ Diagnostic Application or at www.dcctools.com, under the 'Training Aids' link.
2. To use the StarMOBILE® in Pass-Through Mode requires that your StarMOBILE® is connected to the dealership's network via a wired or wireless connection. For more information on how to use the StarMOBILE in Pass-Through Mode see the StarMOBILE® training tutorials available on 'DealerCONNECT > Service > StarSCAN® and StarMOBILE® Tools > Training Aids' link or at www.dcctools.com, under the 'Training Aids' link.
3. If the flash process is interrupted or aborted, the flash should be restarted.
4. Due to the PCM/ECM / TCM programming procedure, a DTC may be set in other ECUs within the vehicle. Some DTCs may cause the MIL to illuminate. From the "Home" screen select "System View". Then select "All DTCs". Press "Clear All Stored DTCs" if there are any DTCs shown on the list.
5. Do not allow the battery charger to time out or the charging rate to climb above 13.5 Volts during the flash process.
6. The StarSCAN® and StarMOBILE® diagnostic tools fully support Internet connectivity and must be configured for your dealership's network. For help on setting up your StarSCAN® / StarMOBILE® for the dealership's network, Refer to the StarSCAN® / StarMOBILE® Quick Start Networking Guide available on 'DealerCONNECT > Service > StarSCAN® and StarMOBILE® Tools > Online Documentation' or at www.dcctools.com, under the download center.
7. The operating software in the StarSCAN® and StarMOBILE® must be programmed with the latest software release level. The software level is visible in the blue header at the top of the StarSCAN® and StarMOBILE® Desktop Client screens. For instructions on how to update your scan tool, Refer to the StarSCAN® / StarMOBILE® Software Update guide available on 'DealerCONNECT > Service > StarSCAN® and StarMOBILE® Tools > Online Documentation' or at www.dcctools.com, under the download center.

PARTS REQUIRED

Qty	Part Number	DESCRIPTION
1	04275086AB	Label, Authorized Modification

POWERTRAIN VERIFICATION TEST - 6.7L

DIAGNOSTIC TEST

1. **POWERTRAIN VERIFICATION TEST**

NOTE: **If the battery was disconnected for any reason, you must perform the Battery Reconnection procedure in the BATTERY SYSTEM - SERVICE INFORMATION .**

1. Clear the DTC before continuing.
2. Check if any of the following conditions exist.
3. The PCM has been disconnected or replaced.
4. The battery power has been disconnected.
5. If the PCM has been replaced, do the following:
6. Record injector correlation codes.
7. For ABS and Airbag Systems: Action: Enter correct VIN and Mileage in PCM. Erase ABS and Airbag Module codes.

NOTE: **If the Powertrain Control Module has been replaced and the correct VIN and mileage have not been programmed, a DTC will be set in the ABS, Airbag Modules and Wireless Control Module.**

8. If the PCM has not been replaced, do the following.
9. Inspect the vehicles to ensure that all engine components are connected. Reassemble and reconnect components as necessary.
10. Attempt to start the engine.
11. If the engine is unable to start, look for any Technical Service Bulletins that may relate to this condition. Return to DTC list if necessary.
12. If this verification procedure is being performed after a No Trouble Code repair, do the following.
13. Check to see if the initial symptom still exists. If the initial or another symptom exists, the repair is not complete. Check all pertinent Technical Service Bulletins and return to the DTC list if necessary.
14. If this verification procedure is being performed after a Trouble Code repair, do the following.
15. Connect the scan tool to the data link connector and erase trouble codes.
16. With the scan tool, reset all memory values.
17. If this test is for an A/C trouble code, ensure it is operating during the following road test.

18. Drive the vehicle for at least five minutes, For some of the drive, go at least 64 km/h (40 MPH). At some point stop the vehicle and turn the engine off for 10 seconds or more; then restart and continue. Make sure the transmission shifts through all gears.
19. Upon completion of the road test, turn the engine off and read trouble codes with the scan tool. If a trouble code has been set, return to the DTC list and follow the path specified.

    Are any DTCs present?

    Yes

    - Repair is not complete, perform appropriate diagnostic procedure. Refer to **DIAGNOSTIC CODE INDEX** .

    No

    - Repair is complete.

INTERMITTENT CONDITION - 6.7L

POSSIBLE CAUSES

POSSIBLE CAUSES
INTERMITTENT CONDITION

DIAGNOSTIC TEST

1. **INTERMITTENT CONDITION**

NOTE: **The conditions that set the DTC are not present at this time. The following list may help in identifying the intermittent condition.**

WARNING: When the engine is operating, do not stand in direct line with the fan. Do not put your hands near the pulleys, belts or fan. Do not wear loose clothing. Failure to follow these instructions may result in possible serious or fatal injury.

1. Perform any Technical Service Bulletins (TSBs) that may apply.
2. Review the scan tool Freeze Frame information. If possible, try to duplicate the conditions under which the DTC set.
3. With the engine running at normal operating temperature, monitor the scan tool parameters related to the DTC while wiggling the wire harness. Look for parameter values to change and/or a DTC to set.
4. Turn the ignition off.
5. Visually inspect the related wire harness. Disconnect all the related harness connectors. Look for any chafed, pierced, pinched, partially broken wires and broken, bent, pushed out, or corroded

terminals.

6. Perform a voltage drop test on the related circuits between the suspected inoperative component and the PCM.
7. Inspect and clean all PCM, engine, and chassis grounds that are related to the most current DTC.
8. If numerous trouble codes were set, use a wire schematic and look for any common ground or supply circuits.
9. For any Relay DTCs, actuate the Relay with the scan tool and wiggle the related wire harness to try to interrupt the actuation.
10. For intermittent Misfire DTCs check for restrictions in the Intake and Exhaust system, proper installation of Sensors, vacuum leaks, and binding components that are run by the accessory drive belt.
11. Use the scan tool to perform a System Test if one applies to failing component.
12. A co-pilot, data recorder, and/or lab scope should be used to help diagnose intermittent conditions.

Were any problems found during the above inspections?

Yes

- Perform the necessary repairs.
- Perform the POWERTRAIN VERIFICATION TEST 6.7L. Refer to **POWERTRAIN VERIFICATION TEST - 6.7L** .

No

- Test Complete.

Powertrain Control Module (PCM) - Electrical Diagnostics, 6.7L Diesel - 3500 Cab & Chassis, 4500 & 5500

DIAGNOSIS AND TESTING

P0008-ENGINE POSITION SYSTEM PERFORMANCE BANK 1

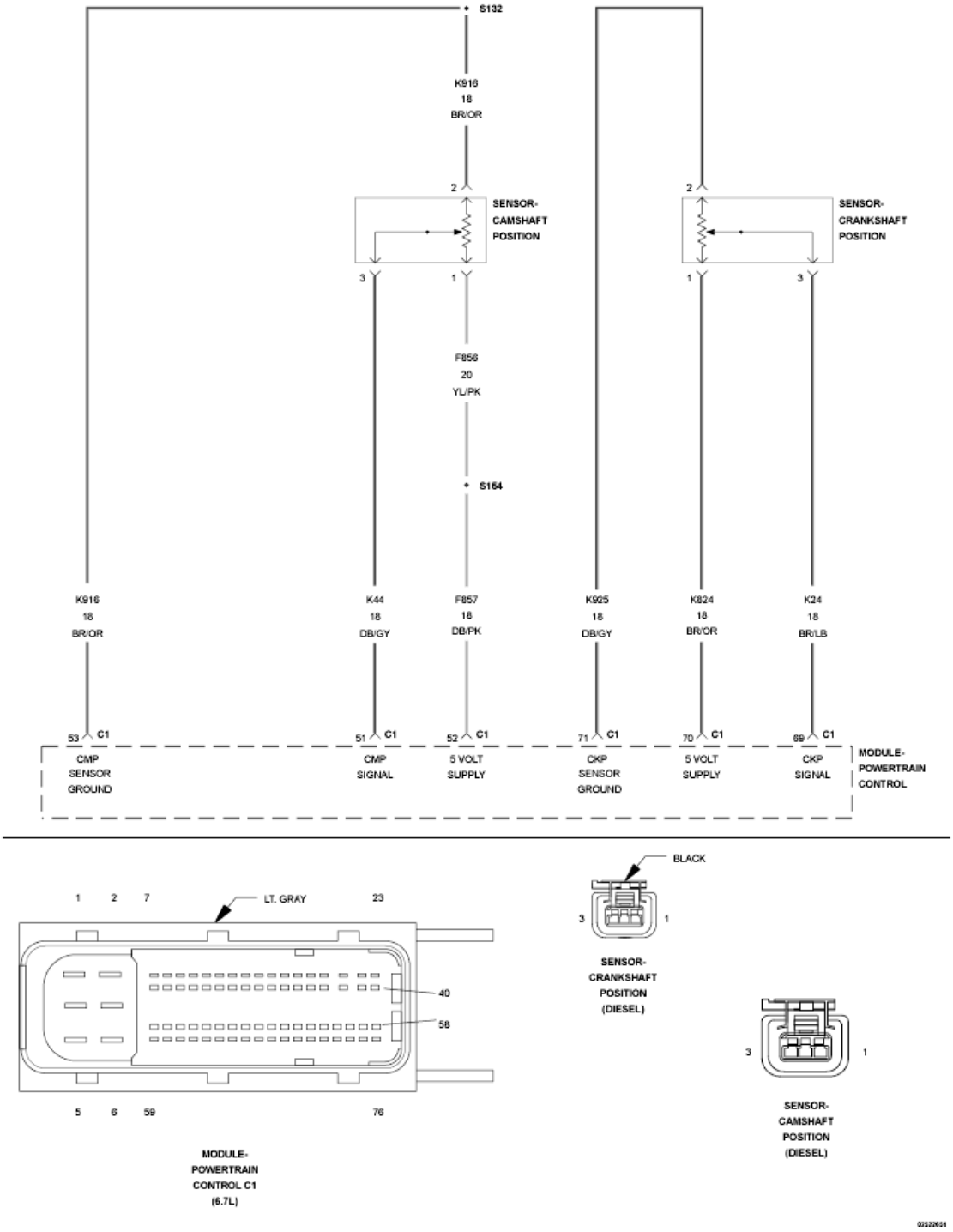

Fig. 1: Crankshaft Position Sensor & Camshaft Position Sensor Circuit Schematic
Courtesy of CHRYSLER GROUP, LLC

For a complete wiring diagram, **refer to appropriate SYSTEM WIRING DIAGRAMS article** .

THEORY OF OPERATION

The Powertrain Control Module (PCM) will turn on the MIL lamp immediately after this diagnostic runs and

fails. The PCM will turn off the MIL lamp after the diagnostic runs and passes in four consecutive drive cycles.

WHEN MONITORED:

With the engine running.

SET CONDITION:

The PCM has detected that the Crank Position Sensor (CKP) and Cam Position Sensor (CMP) signals are reversed.

POSSIBLE CAUSES

Possible Causes
CRANK AND CAM POSITION SENSOR CONNECTORS REVERSED

Always perform the Pre-Diagnostic Troubleshooting procedure before proceeding. Refer to PRE-DIAGNOSTIC TROUBLESHOOTING PROCEDURE - 6.7L .

DIAGNOSTIC TEST

1. **ACTIVE DTC**
    1. Ignition on, engine not running.
    2. With the scan tool, clear the DTC.
    3. Start or crank the engine.
    4. With the scan tool, read DTCs.

    Did the DTC reset?

    Yes

    - Go To 2.

    No

    - Perform the INTERMITTENT CONDITION - 6.7L diagnostic procedure. Refer to **INTERMITTENT CONDITION - 6.7L** .
2. **CRANK AND CAM SENSOR CONNECTORS REVERSED**
    1. This DTC indicates that the CKP and CMP Position Sensor signals are reversed.
    2. Switch the CKP and CMP Position Sensor connectors.
    3. With the scan tool, clear the DTC.
    4. Start or crank the engine.
    5. With the scan tool, read DTCs.

    Did the DTC reset?

Yes

- Using the wiring diagram as a guide, check the connectors and wiring for proper configuration.
- Perform the POWERTRAIN VERIFICATION TEST - 6.7L. Refer to **POWERTRAIN VERIFICATION TEST - 6.7L** .

No

- Repair complete.
- Perform the POWERTRAIN VERIFICATION TEST - 6.7L. Refer to **POWERTRAIN VERIFICATION TEST - 6.7L** .

P000F-FUEL SYSTEM OVER PRESSURE RELIEF VALVE ACTIVATED

For a complete wiring diagram, **refer to appropriate SYSTEM WIRING DIAGRAMS article** .

THEORY OF OPERATION

The Powertrain Control Module (PCM) will turn on the MIL lamp immediately after this diagnostic runs and fails. This DTC will cause active regeneration to be disabled. The PCM will turn off the MIL lamp after the diagnostic runs and passes in 4 consecutive drive cycles.

WHEN MONITORED:

With the engine running.

SET CONDITION:

Fuel pressure deviation from setpoint occurs at a rate higher than a calibrated amount.

POSSIBLE CAUSES

Possible Causes
PRESSURE LIMITING VALVE
LIFT PUMP
HIGH PRESSURE PUMP
EXCESSIVE INJECTOR DRAINS

Always perform the Pre-Diagnostic Troubleshooting procedure before proceeding. Refer to PRE-DIAGNOSTIC TROUBLESHOOTING PROCEDURE - 6.7L .

DIAGNOSTIC TEST

1. **CHECK THE FUEL DELIVERY SYSTEM**
    1. Perform the CHECKING THE FUEL DELIVERY SYSTEM diagnostic procedure. Refer to

DIAGNOSIS AND TESTING, 6.7L .

Were any problems found?

Yes

- Repair as necessary.

No

- Perform the INTERMITTENT CONDITION - 6.7L diagnostic procedure. Refer to **INTERMITTENT CONDITION - 6.7L** .

P0016-CRANKSHAFT/CAMSHAFT TIMING MISALIGNMENT - BANK 1 SENSOR 1

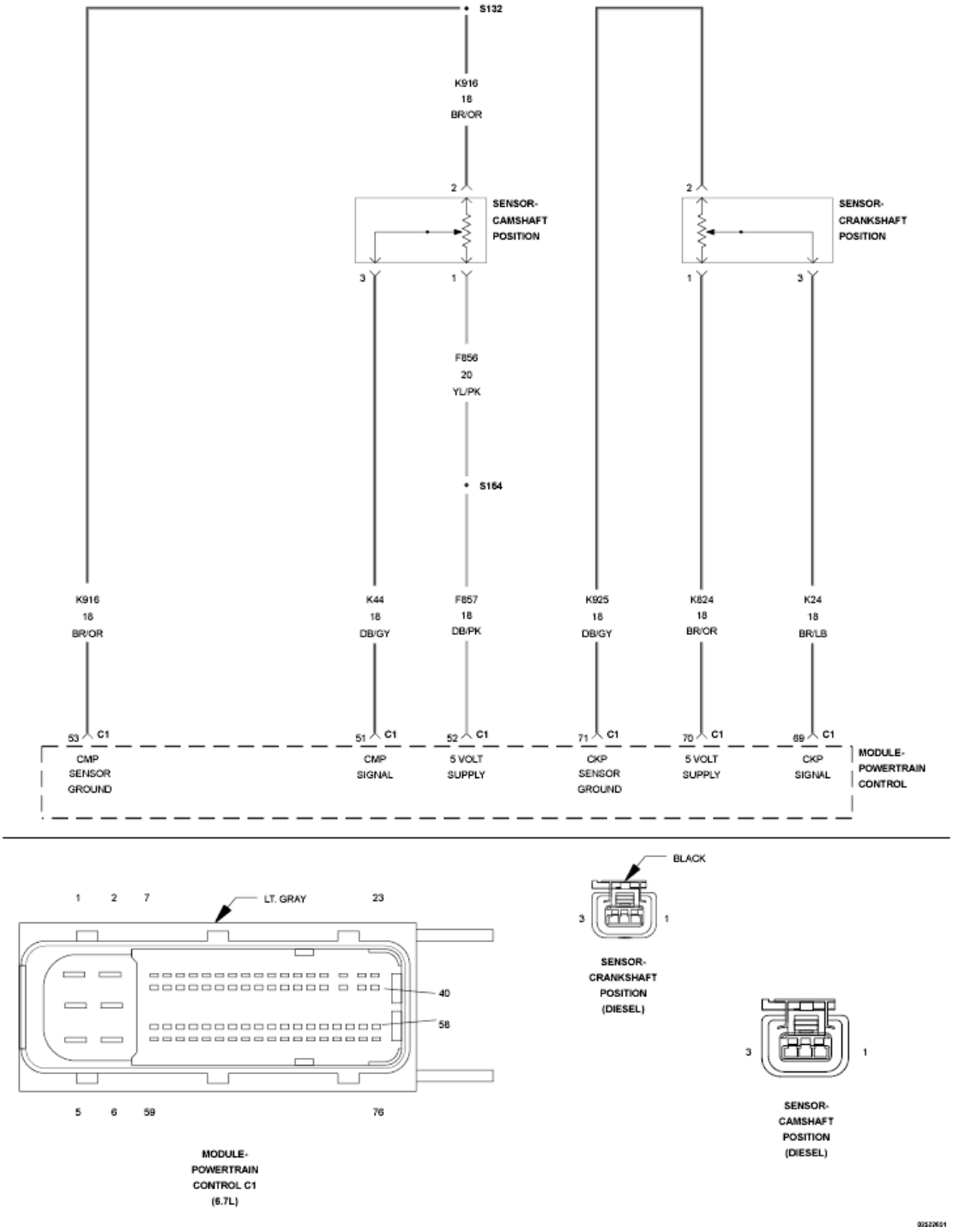

Fig. 2: Crankshaft Position Sensor & Camshaft Position Sensor Circuit Schematic
Courtesy of CHRYSLER GROUP, LLC

For a complete wiring diagram, **refer to appropriate SYSTEM WIRING DIAGRAMS article** .

THEORY OF OPERATION

The Crankshaft Position Sensor (CKP) and Camshaft Position Sensor (CMP) are hall effect type sensors. The

Powertrain Control Module (PCM) provides the sensors with a 5-Volt supply and a ground on the sensor return circuit. As the notch on the crank pulley or the windows on the camshaft gear travel by the position sensor, a signal is generated on the position sensor signal circuit. The PCM interprets this signal and converts it to an engine speed. If the fault is active the engine will run derated and a hard start/rough idle is possible.

WHEN MONITORED:

While engine is running. The Powertrain Control Module (PCM) monitors the position of the notch on the crankshaft speed sensor target and the camshaft speed sensor target. If the two positions do not match, the PCM then determines that there is a mechanical mis-alignment between the two sensors.

SET CONDITION:

When the Crankshaft Position Sensor (CKP) and Camshaft Position Sensor (CMP) are out of sync for more than five seconds. The Powertrain Control Module (PCM) illuminates the MIL light immediately.

POSSIBLE CAUSES

Possible Causes
DAMAGE TO THE CRANKSHAFT POSITION SENSOR (CKP) OR CAMSHAFT POSITION SENSOR (CMP)
DAMAGED TONE WHEEL
MECHANICAL MISALIGNMENT OF THE CKP OR CMP
MECHANICAL MISALIGNMENT OF THE CRANKSHAFT AND CAMSHAFT GEARS

Always perform the Pre-Diagnostic Troubleshooting procedure before proceeding. Refer to PRE-DIAGNOSTIC TROUBLESHOOTING PROCEDURE - 6.7L .

DIAGNOSTIC TEST

1. **DAMAGE TO THE CKP OR CMP**
    1. Visually inspect the condition of the tone wheel, CKP, and CMP for damage.

       Are any of the components damaged?

       Yes

       - Repair or replace any damaged component.
       - Perform the POWERTRAIN VERIFICATION TEST - 6.7L. Refer to **POWERTRAIN VERIFICATION TEST - 6.7L** .

       No

       - Go To 2.
2. **MECHANICAL MISALIGNMENT OF THE CKP OR CMP**
    1. Verify the tone wheel is properly positioned relative to the locating pin in the front face of the

crankshaft.

Is the tone wheel properly installed?

Yes

- Go To 3.

No

- Repair the tone wheel installation.
- Perform the POWERTRAIN VERIFICATION TEST - 6.7L. Refer to **POWERTRAIN VERIFICATION TEST - 6.7L** .

3. **MECHANICAL MISALIGNMENT OF THE CRANKSHAFT AND CAMSHAFT GEARS**
   1. Check the mechanical alignment of the camshaft gear to the crankshaft gear. Refer to service information for assistance.

      Are the gear teeth in proper alignment?

      Yes

      - Perform the INTERMITTENT CONDITION - 6.7L diagnostic procedure. Refer to **INTERMITTENT CONDITION - 6.7L** .

      No

      - Repair the gear alignment.
      - Perform the POWERTRAIN VERIFICATION TEST - 6.7L. Refer to **POWERTRAIN VERIFICATION TEST - 6.7L** .

P003A-TURBOCHARGER BOOST CONTROL MODULE POSITION EXCEEDED LEARNING LIMIT

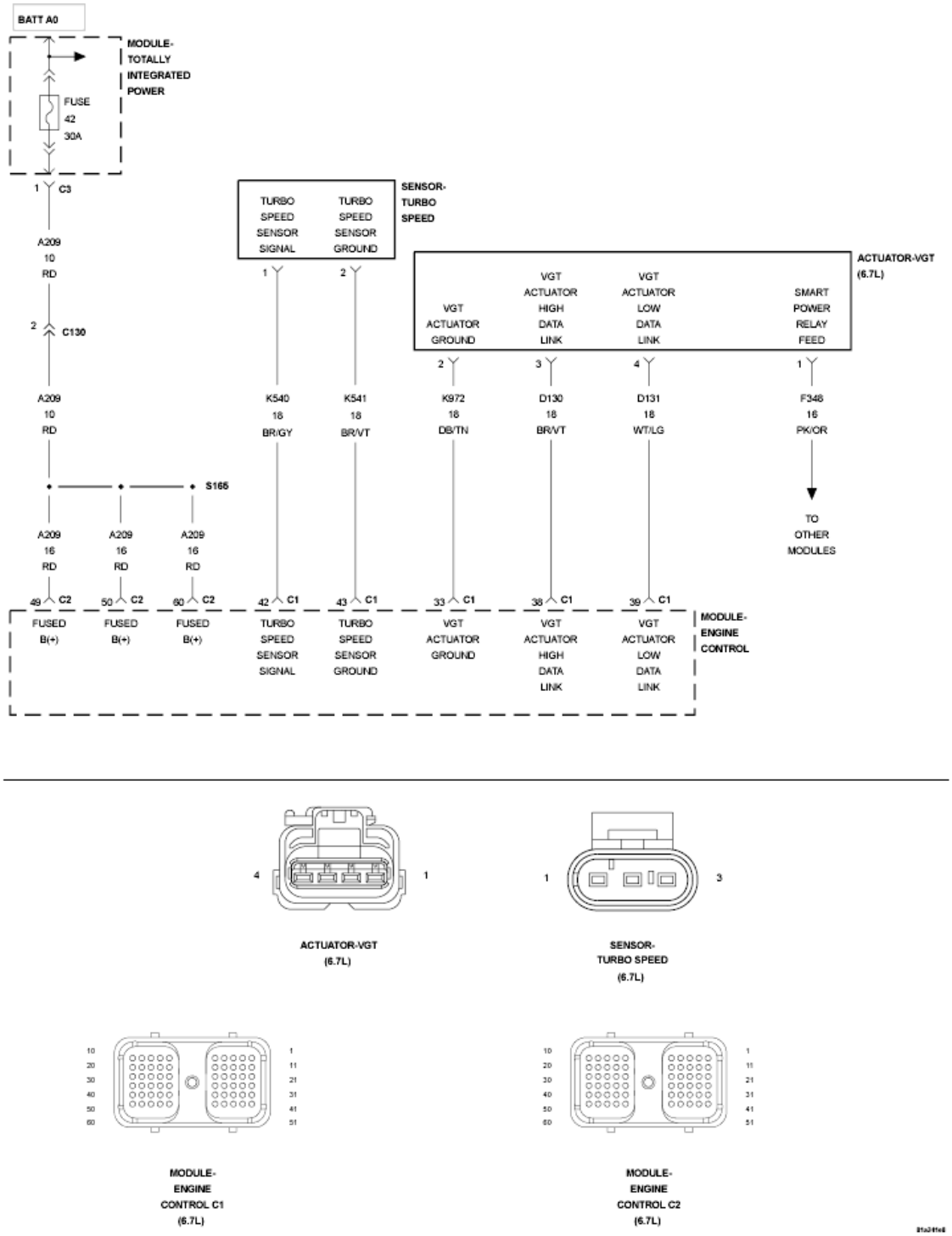

Fig. 3: Variable Geometry Turbocharger (VGT) Control Circuit Schematic
Courtesy of CHRYSLER GROUP, LLC

For a complete wiring diagram, **refer to appropriate SYSTEM WIRING DIAGRAMS article** .

THEORY OF OPERATION

The Variable Geometry Turbocharger (VGT) is electronically controlled by the Electronic Turbo Actuator. The Electronic Turbo Actuator is a smart device; it communicates information with the Powertrain Control Module (PCM) over the CAN C BUS. The Electronic Turbo Actuator performs its own internal diagnostics and reports failures back to the PCM. The PCM then decodes the error message and converts it to a fault code. The PCM lights the Malfunction Indicator Lamp (MIL) after the diagnostic runs and fails in two consecutive drive cycles. The PCM will turn off the MIL immediately after this diagnostic runs and passes in four (4) consecutive drive cycles.

WHEN MONITORED:

With the ignition on.

SET CONDITION:

The VGT Actuator calibrated end-stops were not detected.

POSSIBLE CAUSES

Possible Causes
VGT ACTUATOR CALIBRATION MISSING/CORRUPTED

Always perform the Pre-Diagnostic Troubleshooting procedure before proceeding. Refer to PRE-DIAGNOSTIC TROUBLESHOOTING PROCEDURE - 6.7L .

DIAGNOSTIC TEST

1. **ACTIVE DTC**
    1. Turn ignition on, engine not running.
    2. With the scan tool, read DTCs

    Is P003A active?

    Yes

    - Replace the Turbocharger Assembly in accordance with the service information.
    - Perform the POWERTRAIN VERIFICATION TEST - 6.7L. Refer to **POWERTRAIN VERIFICATION TEST - 6.7L** .

    No

    - Perform the INTERMITTENT CONDITION - 6.7L diagnostic procedure. Refer to **INTERMITTENT CONDITION - 6.7L** .

P0046-TURBOCHARGER BOOST CONTROL CIRCUIT PERFORMANCE

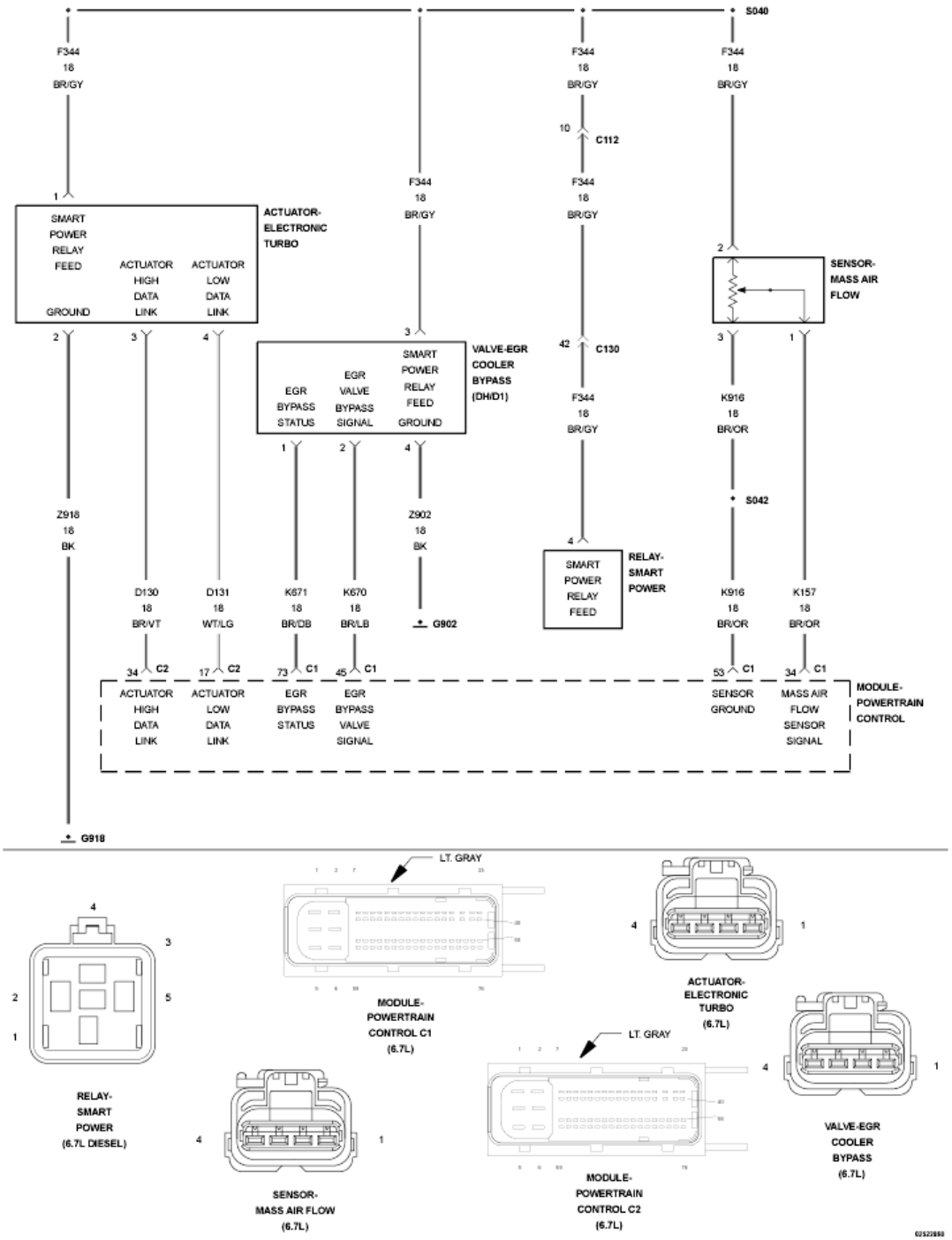

Fig. 4: Turbocharger Boost Control Circuit Schematic
Courtesy of CHRYSLER GROUP, LLC

For a complete wiring diagram, **refer to appropriate SYSTEM WIRING DIAGRAMS article** .

THEORY OF OPERATION

The Variable Geometry Turbocharger (VGT) is electronically controlled by the Electronic Turbo Actuator. The Electronic Turbo Actuator is a smart device; it communicates information with the Powertrain Control Module

(PCM) over the J1939 BUS. The Electronic Turbo Actuator performs its own internal diagnostics and reports failures back to the PCM. The PCM then decodes the error message and converts it to a fault code. The PCM lights the Malfunction Indicator Lamp (MIL) after the diagnostic runs and fails in two consecutive drive cycles. The PCM will turn off the MIL immediately after this diagnostic runs and passes in four consecutive drive cycles.

WHEN MONITORED:

With the ignition on.

SET CONDITION:

The Electronic Turbo Actuator does not receive a valid J1939 BUS message from the Powertrain Control Module (PCM) for five seconds.

POSSIBLE CAUSES

Possible Causes
(F344) SMART POWER RELAY FEED
(K918) ACTUATOR GROUND
TURBOCHARGER ASSEMBLY
POWERTRAIN CONTROL MODULE (PCM)

Always perform the Pre-Diagnostic Troubleshooting procedure before proceeding. Refer to PRE-DIAGNOSTIC TROUBLESHOOTING PROCEDURE - 6.7L .

DIAGNOSTIC TEST

1. **OTHER DTCs**
    1. Ignition on, engine not running.
    2. With the scan tool, read DTCs.

       Is U010C active?

       Yes

       - Repair U010C first.
       - Perform the POWERTRAIN VERIFICATION TEST - 6.7L. Refer to **POWERTRAIN VERIFICATION TEST - 6.7L** .

       No

       - Go To 2.
2. **POWERTRAIN CONTROL MODULE**
    1. Turn ignition off.

2. Disconnect the Electronic Turbo Actuator harness connector.

NOTE: Check connectors - Clean/repair as necessary.

3. Ignition on, engine not running.
4. After 75 seconds, monitor the system response with the scan tool.

Is U010C active?

Yes

- Go To 3.

No

- Replace the Powertrain Control Module in accordance with the Service Information.
- Perform the POWERTRAIN VERIFICATION TEST - 6.7L. Refer to **POWERTRAIN VERIFICATION TEST - 6.7L** .

3. **INTERMITTENT CONNECTION**
   1. Turn ignition off.
   2. Reconnect the Electronic Turbo Actuator harness connector.
   3. Ignition on, engine not running.
   4. After 75 seconds, monitor the system response with the scan tool.

   Is P0046 active?

   Yes

   - Go To 4.

   No

   - Repair complete.
   - Perform the POWERTRAIN VERIFICATION TEST - 6.7L. Refer to **POWERTRAIN VERIFICATION TEST - 6.7L** .
4. **PCM CONNECTION**
   1. Turn ignition off.
   2. Disconnect the PCM harness connector.

   NOTE: Check connectors - Clean/repair as necessary.

   Were their any dirty or damaged terminals?

Yes

- Repair/Replace as necessary.
- Perform the POWERTRAIN VERIFICATION TEST - 6.7L. Refer to **POWERTRAIN VERIFICATION TEST - 6.7L** .

No

- Go To 5.

5. **INTERMITTENT CONNECTION**
   1. Turn ignition off.
   2. Reconnect the Electronic Turbo Actuator harness connector.
   3. Reconnect the PCM harness connector.
   4. Ignition on, engine not running.
   5. After 75 seconds, monitor the system response with the scan tool.

   Is P0046 active?

   Yes

   - Replace the Turbocharger Assembly in accordance with the service information.
   - Perform the POWERTRAIN VERIFICATION TEST - 6.7L. Refer to **POWERTRAIN VERIFICATION TEST - 6.7L** .

   No

   - Repair complete.
   - Perform the POWERTRAIN VERIFICATION TEST - 6.7L. Refer to **POWERTRAIN VERIFICATION TEST - 6.7L** .

P0049-TURBOCHARGER TURBINE OVERSPEED

For a complete wiring diagram, **refer to appropriate SYSTEM WIRING DIAGRAMS article** .

THEORY OF OPERATION

The Turbocharger Speed Sensor is a variable reluctance speed sensor. It consists of a coil of wire and an iron core. The target on the turbocharger shaft is a ground flat surface in the center of the shaft. As the flat surface on the turbocharger shaft spins past the speed sensor, a signal is generated. The Powertrain Control Module (PCM) interprets this signal and converts it to a turbocharger speed reading. If this fault becomes active the PCM will light the MIL light immediately. During this time the PCM uses an estimated turbocharger speed. An engine power derate may be experienced. The PCM turns off the MIL when the diagnostic runs and passes in four consecutive drive cycles.

WHEN MONITORED:

When the key is on and the Powertrain Control Module (PCM) detects a valid turbocharger speed.

SET CONDITION:

Powertrain Control Module (PCM) detects that the Turbocharger Speed Sensor is out of range high.

POSSIBLE CAUSES

Possible Causes
(K540) TURBO SPEED SENSOR SIGNAL CIRCUIT SHORTED TO GROUND
(K540) TURBO SPEED SENSOR SIGNAL CIRCUIT OPEN/HIGH RESISTANCE
(K541) TURBO SPEED SENSOR RETURN CIRCUIT OPEN/HIGH RESISTANCE
TURBOCHARGER SPEED SENSOR

Always perform the Pre-Diagnostic Troubleshooting procedure before proceeding. Refer to PRE-DIAGNOSTIC TROUBLESHOOTING PROCEDURE - 6.7L .

DIAGNOSTIC TEST

1. **OTHER DTCS**
   1. With the scan tool, read DTCs.

      Are any DTCs present for Inlet Air Pressure Sensor or Boost Pressure Sensor?

      Yes

      - Troubleshoot other DTCs first.
      - Perform the POWERTRAIN VERIFICATION TEST - 6.7L. Refer to **POWERTRAIN VERIFICATION TEST - 6.7L** .

      No

      - Go To 2.
2. **INTERMITTENT CONDITION**
   1. Start the engine.
   2. Using the accelerator pedal, accelerate the engine speed to high idle and hold the engine speed at high idle for at least 20 seconds.

      Does DTC P0049 become active?

      Yes

      - Go To 3.

      No

- Perform the INTERMITTENT CONDITION - 6.7L diagnostic procedure. Refer to **INTERMITTENT CONDITION - 6.7L** .

3. **TURBOCHARGER SPEED SENSOR**

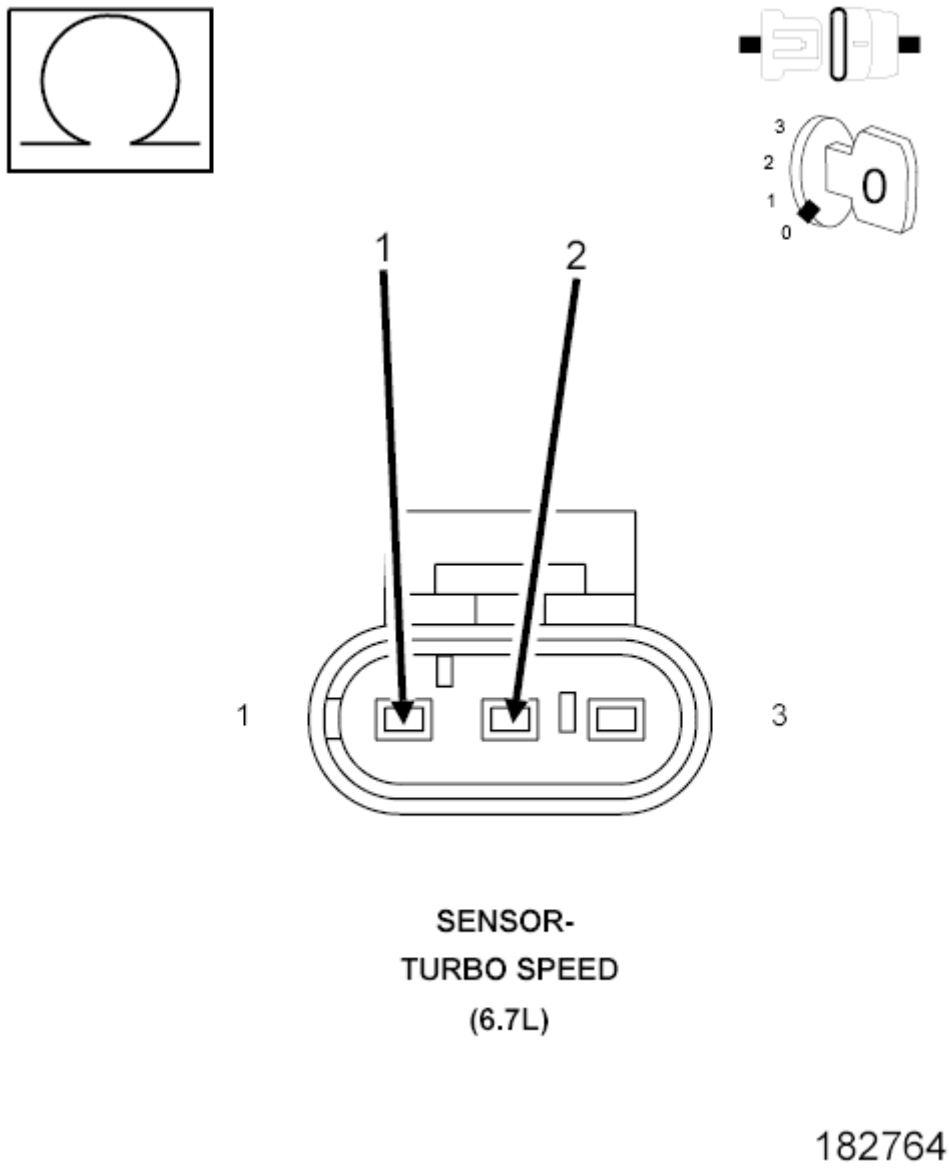

Fig. 5: Checking Turbocharger Speed Sensor
Courtesy of CHRYSLER GROUP, LLC

1. Turn Ignition off.
2. Disconnect the Turbocharger Speed Sensor connector.

NOTE: Check connectors - Clean/repair as necessary.

3. Measure the resistance across the (K540) Turbocharger Speed Sensor Signal circuit and the (K541)

Turbocharger Speed Sensor Return circuit at the Turbocharger Speed Sensor.

Is the resistance between 600 and 1600 Ohms?

Yes

- Go To 4.

No

- Replace the Turbocharger Speed Sensor.
- Perform the POWERTRAIN VERIFICATION TEST - 6.7L. Refer to **POWERTRAIN VERIFICATION TEST - 6.7L** .

4. **CHECK THE (K540) TURBO SPEED SENSOR SIGNAL CIRCUIT FOR A SHORT TO GROUND**

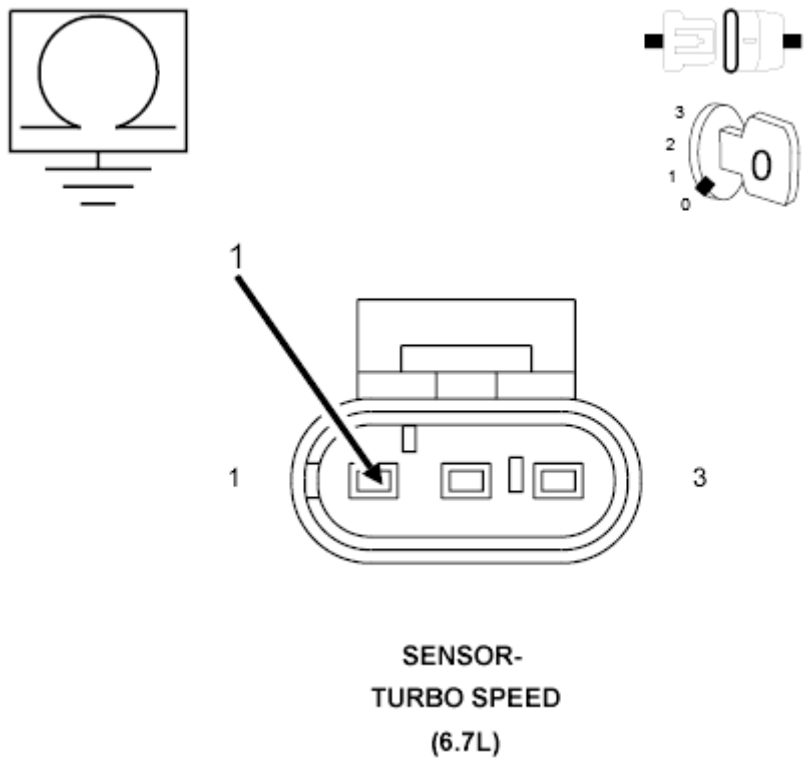

Fig. 6: Checking Turbo Speed Sensor Signal Circuit For Short To Ground
Courtesy of CHRYSLER GROUP, LLC

1. Measure the resistance between ground and the (K540) Turbocharger Speed Sensor Signal circuit at the Turbocharger Speed Sensor connector.

   Is the resistance greater than 10k Ohms?

   Yes

- Go To 5.

No

- Repair the (K540) Turbocharger Speed Sensor Signal circuit for a short to ground.
- Perform the POWERTRAIN VERIFICATION TEST - 6.7L. Refer to **POWERTRAIN VERIFICATION TEST - 6.7L** .

5. **CHECK THE (K540) TURBO SPEED SENSOR SIGNAL CIRCUIT FOR AN OPEN/HIGH RESISTANCE**

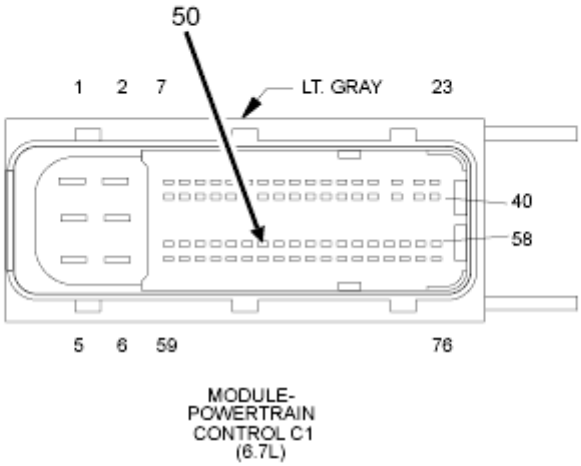

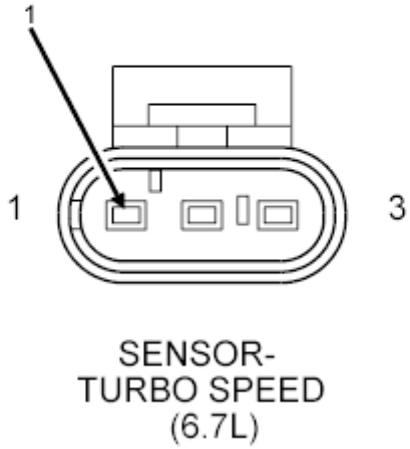

2570525

Fig. 7: Checking Turbo Speed Sensor Signal Circuit For Open Or High Resistance
Courtesy of CHRYSLER GROUP, LLC

1. Disconnect the PCM C1 harness connector.

   NOTE: Check connectors - Clean/repair as necessary.

2. Measure the resistance of the (K540) Turbocharger Speed Sensor Signal circuit between the Turbocharger Speed Sensor harness connector and the PCM C1 harness connector.

   Is the resistance below 5.0 Ohms?

   Yes

   - Go To 6.

   No

   - Repair the (K540) Turbocharger Speed Sensor Signal circuit for an open or high resistance.
   - Perform the POWERTRAIN VERIFICATION TEST - 6.7L. Refer to **POWERTRAIN VERIFICATION TEST - 6.7L** .

6. **CHECK THE (K541) TURBO SPEED SENSOR RETURN CIRCUIT FOR AN OPEN/HIGH RESISTANCE**

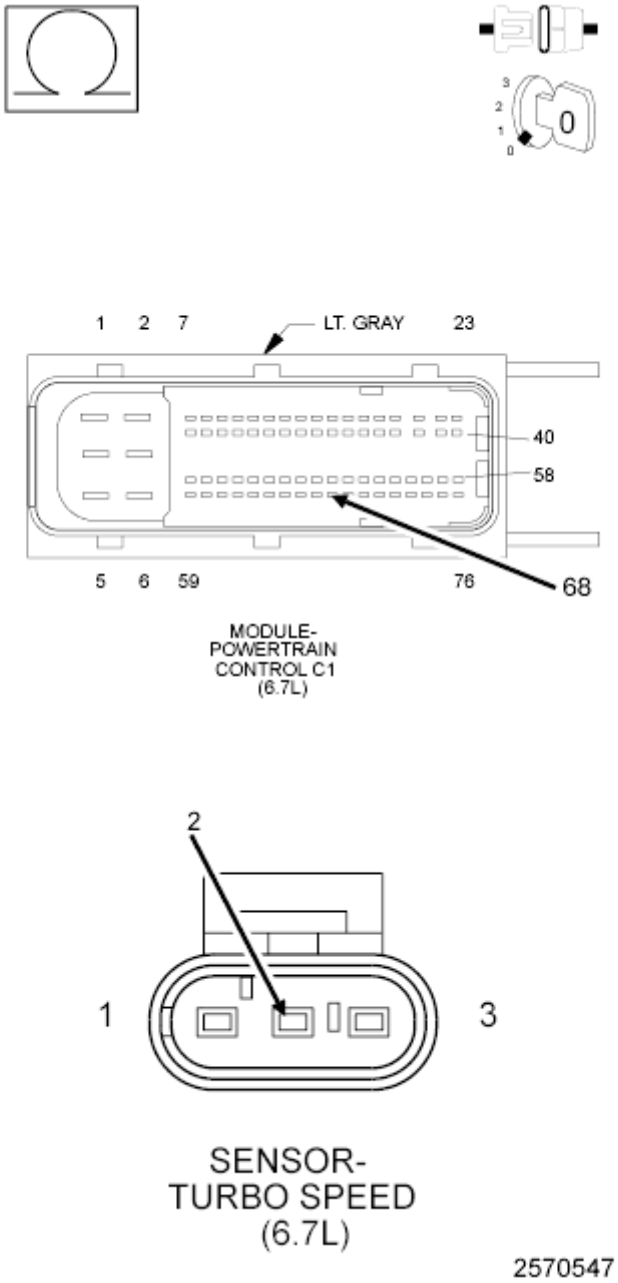

Fig. 8: Checking Turbo Speed Sensor Return Circuit For Open Or High Resistance
Courtesy of CHRYSLER GROUP, LLC

1. Measure the resistance of the (K541) Turbocharger Speed Sensor Return circuit between the Turbocharger Speed Sensor harness connector and the PCM C1 harness connector.

   Is the resistance below 5.0 Ohms?

   Yes

   - Go To 7.

No

- Repair the (K541) Turbocharger Speed Sensor Return circuit for an open or high resistance.
- Perform the POWERTRAIN VERIFICATION TEST - 6.7L. Refer to **POWERTRAIN VERIFICATION TEST - 6.7L** .

7. **POWERTRAIN CONTROL MODULE**
    1. Reconnect PCM C1 harness connector.
    2. Reconnect the Turbocharger Speed Sensor connector.
    3. Turn the ignition on.
    4. With the scan tool, clear DTCs.
    5. Test drive the vehicle.

    Does DTC P0049 become active?

    Yes

    - Replace the Powertrain Control Module in accordance with the Service Information.
    - Perform the POWERTRAIN VERIFICATION TEST - 6.7L. Refer to **POWERTRAIN VERIFICATION TEST - 6.7L** .

    No

    - Repair complete.
    - Perform the POWERTRAIN VERIFICATION TEST - 6.7L. Refer to **POWERTRAIN VERIFICATION TEST - 6.7L** .

P006E-TURBOCHARGER BOOST CONTROL SUPPLY VOLTAGE CIRCUIT LOW

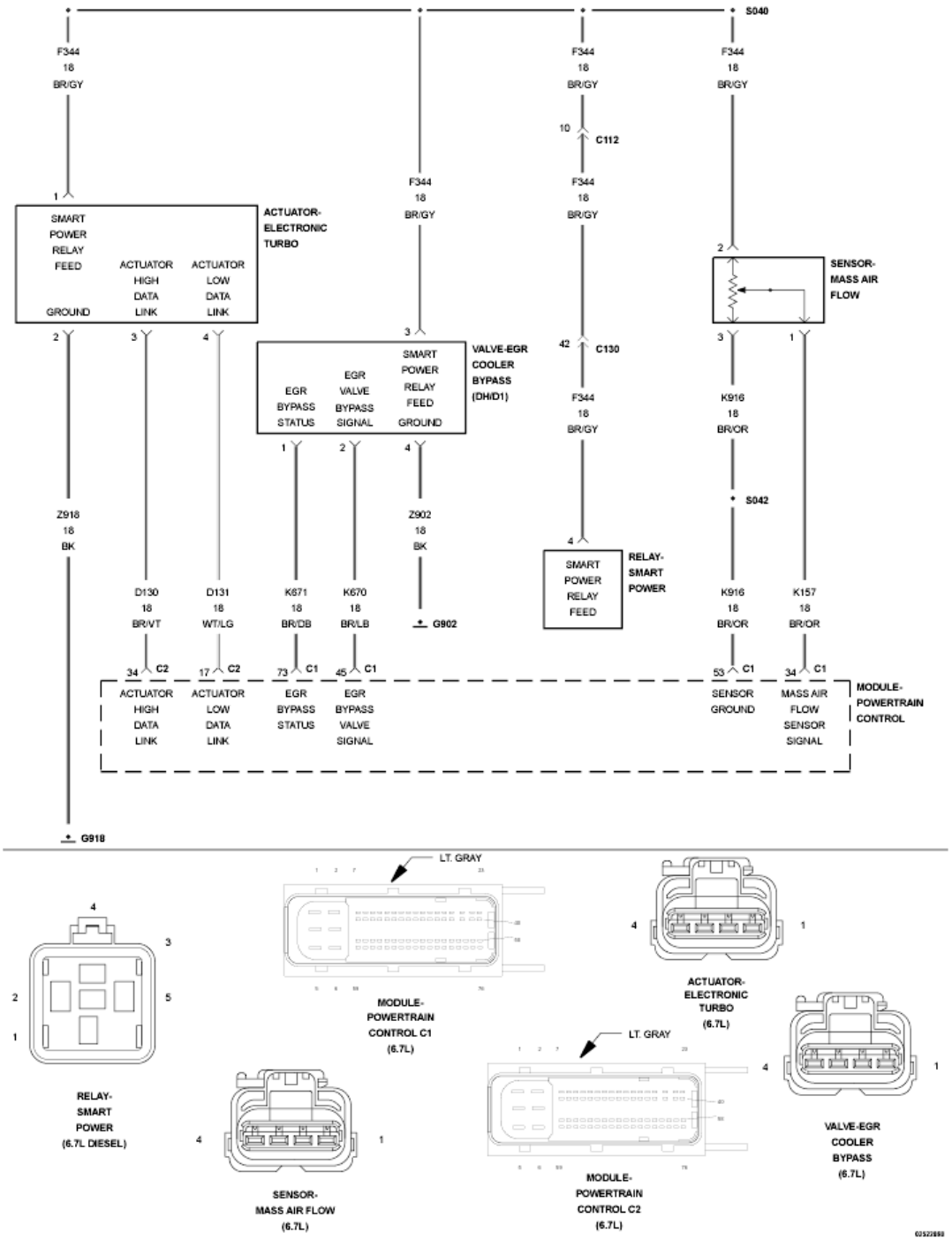

Fig. 9: Turbocharger Boost Control Circuit Schematic
Courtesy of CHRYSLER GROUP, LLC

For a complete wiring diagram, **refer to appropriate SYSTEM WIRING DIAGRAMS article** .

THEORY OF OPERATION

The Variable Geometry Turbocharger (VGT) is electronically controlled by the Electronic Turbo Actuator. The Electronic Turbo Actuator is a smart device; it communicates information with the PCM over the J1939 BUS.

The Electronic Turbo Actuator performs its own internal diagnostics and reports failures back to the PCM. The PCM then decodes the error message and converts it to a fault code. The PCM lights the Malfunction Indicator Lamp (MIL) after the diagnostic runs and fails in two consecutive drive cycles. The PCM will turn off the MIL immediately after this diagnostic runs and passes in four consecutive drive cycles.

WHEN MONITORED:

With the iIgnition on.

SET CONDITION:

Supplied voltage to the VGT Actuator dropped below 10.0 Volts.

POSSIBLE CAUSES

Possible Causes
(F344) SMART POWER RELAY FEED OPEN/HIGH RESISTANCE
SMART POWER RELAY
TURBOCHARGER ASSEMBLY

Always perform the Pre-Diagnostic Troubleshooting procedure before proceeding. Refer to PRE-DIAGNOSTIC TROUBLESHOOTING PROCEDURE - 6.7L .

DIAGNOSTIC TEST

1. **ACTIVE DTC**
    1. Turn the ignition on.
    2. With the scan tool, read DTCs.

    Is P006E active?

    Yes

    - Go To 2.

    No

    - Perform the INTERMITTENT CONDITION - 6.7L diagnostic procedure. Refer to **INTERMITTENT CONDITION - 6.7L** .
2. **RELATED DTCs**
    1. Ignition on.
    2. With the scan tool, read DTCs.

    Are there any other system voltage low DTCs present?

    Yes

- Repair the (F344) Smart Power Relay Feed circuit for an open or high resistance.
- Perform the POWERTRAIN VERIFICATION TEST - 6.7L. Refer to **POWERTRAIN VERIFICATION TEST - 6.7L** .

No

- Go To 3.

3. **CHECK THE (F344) SMART POWER RELAY FEED FOR AN OPEN**
   1. Disconnect the VGT Actuator harness connector.
   2. With a voltmeter connected to ground, measure the voltage of the (F344) Smart Power Relay Feed circuit at the VGT Actuator harness connector.

      Is the voltage above 12.0 Volts?

      Yes

      - Replace the Turbocharger Assembly in accordance with the service information.
      - Perform the POWERTRAIN VERIFICATION TEST - 6.7L. Refer to **POWERTRAIN VERIFICATION TEST - 6.7L** .

      No

      - Repair the (F344) Smart Power Relay Feed circuit for an open or high resistance.
      - Perform the POWERTRAIN VERIFICATION TEST - 6.7L. Refer to **POWERTRAIN VERIFICATION TEST - 6.7L** .

P0087-FUEL RAIL PRESSURE TOO LOW

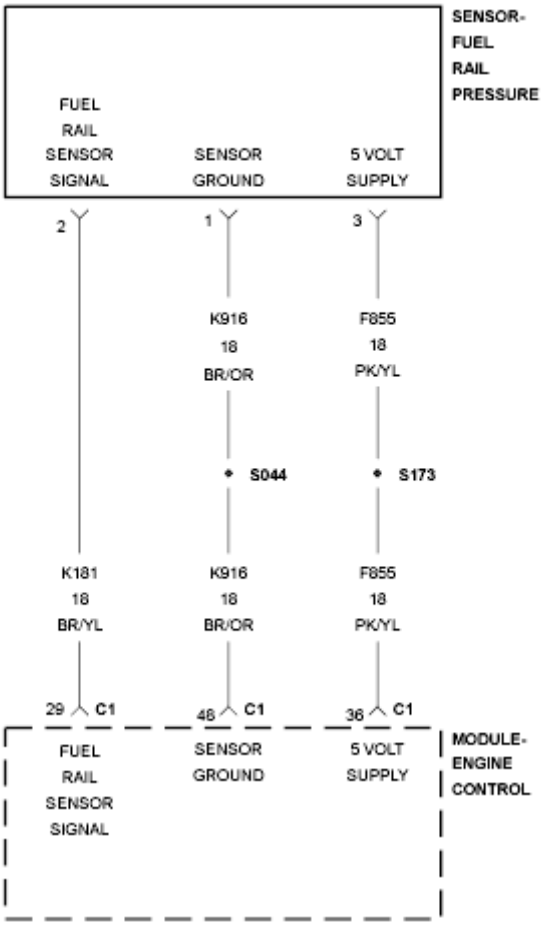

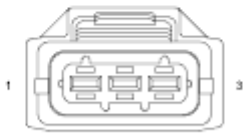

SENSOR-
FUEL RAIL
PRESSURE
(DIESEL)

Fig. 10: Fuel Rail Pressure Sensor Circuit Schematic
Courtesy of CHRYSLER GROUP, LLC

For a complete wiring diagram, **refer to appropriate SYSTEM WIRING DIAGRAMS article** .

THEORY OF OPERATION

The Powertrain Control Module (PCM) will turn on the MIL lamp immediately after this diagnostic runs and fails. This DTC will cause active regeneration to be disabled. The PCM will turn off the MIL lamp after the diagnostic runs and passes in four consecutive drive cycles.

WHEN MONITORED:

With the engine running.

SET CONDITION:

Actual fuel pressure differs from set point more than a calibrated amount for a calibrated amount of time.

POSSIBLE CAUSES

Possible Causes
P000F PRESENT
EXTERNAL FUEL LEAKS
LOW LIFT PUMP FLOW
FUEL FILTER
HIGH PRESSURE PUMP
INJECTOR LEAKAGE
IN TANK LIFT PUMP
FUEL PRESSURE LIMITING VALVE

Always perform the Pre-Diagnostic Troubleshooting procedure before proceeding. Refer to PRE-DIAGNOSTIC TROUBLESHOOTING PROCEDURE - 6.7L .

DIAGNOSTIC TEST

1. **P000F PRESENT**
    1. Ignition on, engine not running.
    2. With the scan tool, read DTCs.

    Yes

    - Troubleshoot P000F first.
    - Perform the POWERTRAIN VERIFICATION TEST - 6.7L. Refer to **POWERTRAIN VERIFICATION TEST - 6.7L** .

No

- Go To 2.

2. **OTHER DTCS**
   1. With the scan tool, read DTCs.

      Are any other injector/fuel pressure related DTCs present?

      Yes

      - Troubleshoot other injector/fuel pressure related DTCs first.

      No

      - Go To 3.

3. **EXTERNAL FUEL LEAKS**
   1. Put on personal protective equipment.
   2. Operate engine at idle when looking for fuel leaks.
   3. Use the scan tool to operate engine at a variety of engine speeds.

      Any external leaks detected?

      Yes

      - Repair or replace component with external fuel leak.
      - Perform the POWERTRAIN VERIFICATION TEST - 6.7L. Refer to **POWERTRAIN VERIFICATION TEST - 6.7L** .

      No

      - Go To 4.

4. **CHECK THE FUEL DELIVERY SYSTEM**
   1. Perform the CHECKING THE FUEL DELIVERY SYSTEM diagnostic procedure. Refer to **DIAGNOSIS AND TESTING, 6.7L** .

      Were any problems found?

      Yes

      - Repair as necessary.

      No

      - Perform the INTERMITTENT CONDITION - 6.7L diagnostic procedure. Refer to **INTERMITTENT CONDITION - 6.7L** .

P0088-FUEL RAIL PRESSURE TOO HIGH

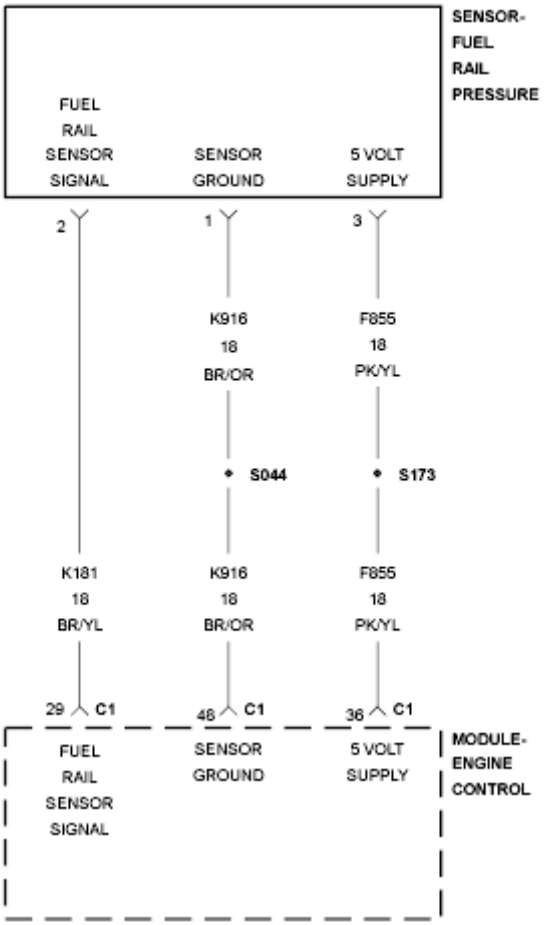

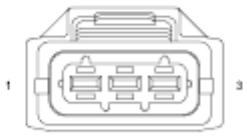

SENSOR-
FUEL RAIL
PRESSURE
(DIESEL)

Fig. 11: Fuel Rail Pressure Sensor Circuit Schematic
Courtesy of CHRYSLER GROUP, LLC

For a complete wiring diagram, **refer to appropriate SYSTEM WIRING DIAGRAMS article** .

THEORY OF OPERATION

The Powertrain Control Module (PCM) will turn on the MIL lamp immediately after the diagnostic runs and fails. During this time the ETC lamp will also illuminate. The PCM will turn off the MIL lamp after the diagnostic runs and passes in four consecutive drive cycles.

WHEN MONITORED:

With the engine running.

SET CONDITION:

Fuel pressure is above a calibrated value for a calibrated amount of time.

POSSIBLE CAUSES

Possible Causes
FUEL CONTROL ACTUATOR
CHECK VALVE DAMAGED OR BLOCKED
LOW PRESSURE FUEL SYSTEM SUPPLY
HIGH PRESSURE FUEL SYSTEM LEAKS
HIGH INLET RESTRICTION
FUEL FILTER
FUEL PRESSURE SENSOR
IN TANK LIFT PUMP

Always perform the Pre-Diagnostic Troubleshooting procedure before proceeding. Refer to PRE-DIAGNOSTIC TROUBLESHOOTING PROCEDURE - 6.7L .

DIAGNOSTIC TEST

1. **OTHER DTCs**
    1. With the scan tool, read DTCs.

       Are any other injector/fuel pressure related DTCs present?

       Yes

       - Troubleshoot other injector/fuel pressure related DTCs first.

       No

- Go To 2.

2. **CHECK THE FUEL DELIVERY SYSTEM**
   1. Perform the CHECKING THE FUEL DELIVERY SYSTEM procedure. Refer to **DIAGNOSIS AND TESTING, 6.7L** .

      Did vehicle pass the CHECKING THE FUEL DELIVERY SYSTEM TEST?

      Yes

      - Go To 3.

      No

      - Perform the appropriate repair.
      - Perform the POWERTRAIN VERIFICATION TEST - 6.7L. Refer to **POWERTRAIN VERIFICATION TEST - 6.7L** .
3. **FUEL CONTROL ACTUATOR**
   1. Check for a mechanically stuck Fuel Control Actuator (FCA). Using the scan tool, actuate the Fuel Control Actuator.

      NOTE: The Fuel Control Actuator will only click when cycled off.

      Do you hear a click from the Fuel Control Actuator when you cycle the actuator off with the scan tool?

      Yes

      - Go To 4.

      No

      - Replace the Fuel Control Actuator in accordance with the service information.
      - Perform the POWERTRAIN VERIFICATION TEST - 6.7L. Refer to **POWERTRAIN VERIFICATION TEST - 6.7L** .
4. **CHECK VALVE DAMAGED OR BLOCKED**
   1. Check the fuel drain line check valve in the rear of the cylinder head for signs of damage, blockage, or debris.

      Is the check valve damaged or blocked?

      Yes

      - Repair the cause of the damaged or blocked check valve or replace the valve.
      - Perform the POWERTRAIN VERIFICATION TEST - 6.7L. Refer to **POWERTRAIN**

VERIFICATION TEST - 6.7L .

No

- Go To 5.

5. **FUEL PRESSURE SENSOR**
   1. Using the scan tool, monitor the fuel pressure reading from the Fuel Rail Pressure Sensor at idle and at 2000 RPM.

      Is the fuel rail pressure reading higher at 2000 RPM than at idle?

      Yes

      - Repair Complete.
      - Perform the POWERTRAIN VERIFICATION TEST - 6.7L. Refer to **POWERTRAIN VERIFICATION TEST - 6.7L** .

      No

      - Replace the Fuel Rail Pressure Sensor in accordance with the service information.
      - Perform the POWERTRAIN VERIFICATION TEST - 6.7L. Refer to **POWERTRAIN VERIFICATION TEST - 6.7L** .

P00AF-TURBOCHARGER BOOST CONTROL MODULE PERFORMANCE

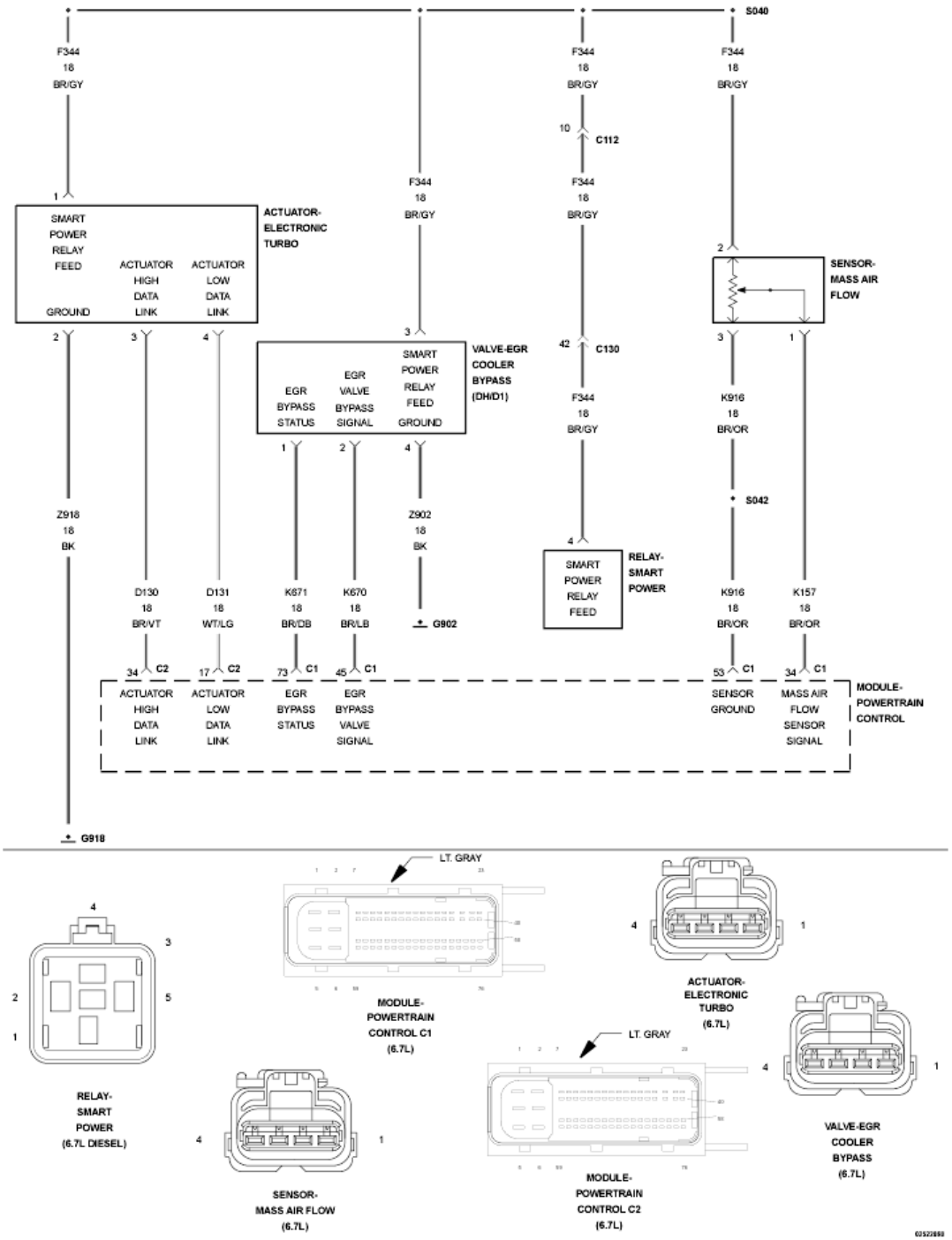

Fig. 12: Turbocharger Boost Control Circuit Schematic
Courtesy of CHRYSLER GROUP, LLC

For a complete wiring diagram, **refer to appropriate SYSTEM WIRING DIAGRAMS article** .

THEORY OF OPERATION

The Variable Geometry Turbocharger (VGT) is electronically controlled by the Electronic Turbo Actuator. The Electronic Turbo Actuator is a smart device; it communicates information with the Powertrain Control Module

(PCM) over the J1939 BUS. The Electronic Turbo Actuator performs its own internal diagnostics and reports failures back to the Powertrain Control Module (PCM). The PCM then decodes the error message and converts it to a fault code. The PCM lights the Malfunction Indicator Lamp (MIL) after the diagnostic runs and fails in two consecutive drive cycles. The PCM will turn off the MIL immediately after this diagnostic runs and passes in four consecutive drive cycles.

WHEN MONITORED:

With the ignition on.

SET CONDITION:

The Electronic Turbo Actuator has detected an internal error in the Variable Geometry Turbocharger (VGT) smart device.

POSSIBLE CAUSES

Possible Causes
TURBOCHARGER ASSEMBLY

Always perform the Pre-Diagnostic Troubleshooting procedure before proceeding. Refer to PRE-DIAGNOSTIC TROUBLESHOOTING PROCEDURE - 6.7L .

DIAGNOSTIC TEST

1. **OTHER DTCS**
    1. Ignition on, engine not running.
    2. With the scan tool, read DTCs.

    Is U010C active?

    Yes

    - Repair U010C first.
    - Perform the POWERTRAIN VERIFICATION TEST - 6.7L. Refer to **POWERTRAIN VERIFICATION TEST - 6.7L** .

    No

    - Go To 2.
2. **ELECTRONIC TURBO ACTUATOR**
    1. Turn ignition off.
    2. Disconnect the Electronic Turbo Actuator harness connector.

    NOTE: Check connectors - Clean/repair as necessary.

Are there dirty or damaged pins?

Yes

- Repair/Replace as necessary.
- Perform the POWERTRAIN VERIFICATION TEST - 6.7L. Refer to **POWERTRAIN VERIFICATION TEST - 6.7L** .

No

- Replace the Turbocharger Assembly in accordance with the service information.
- Perform the POWERTRAIN VERIFICATION TEST - 6.7L. Refer to **POWERTRAIN VERIFICATION TEST - 6.7L** .

P00DA-AMBIENT AIR TEMPERATURE SENSOR CIRCUIT PERFORMANCE

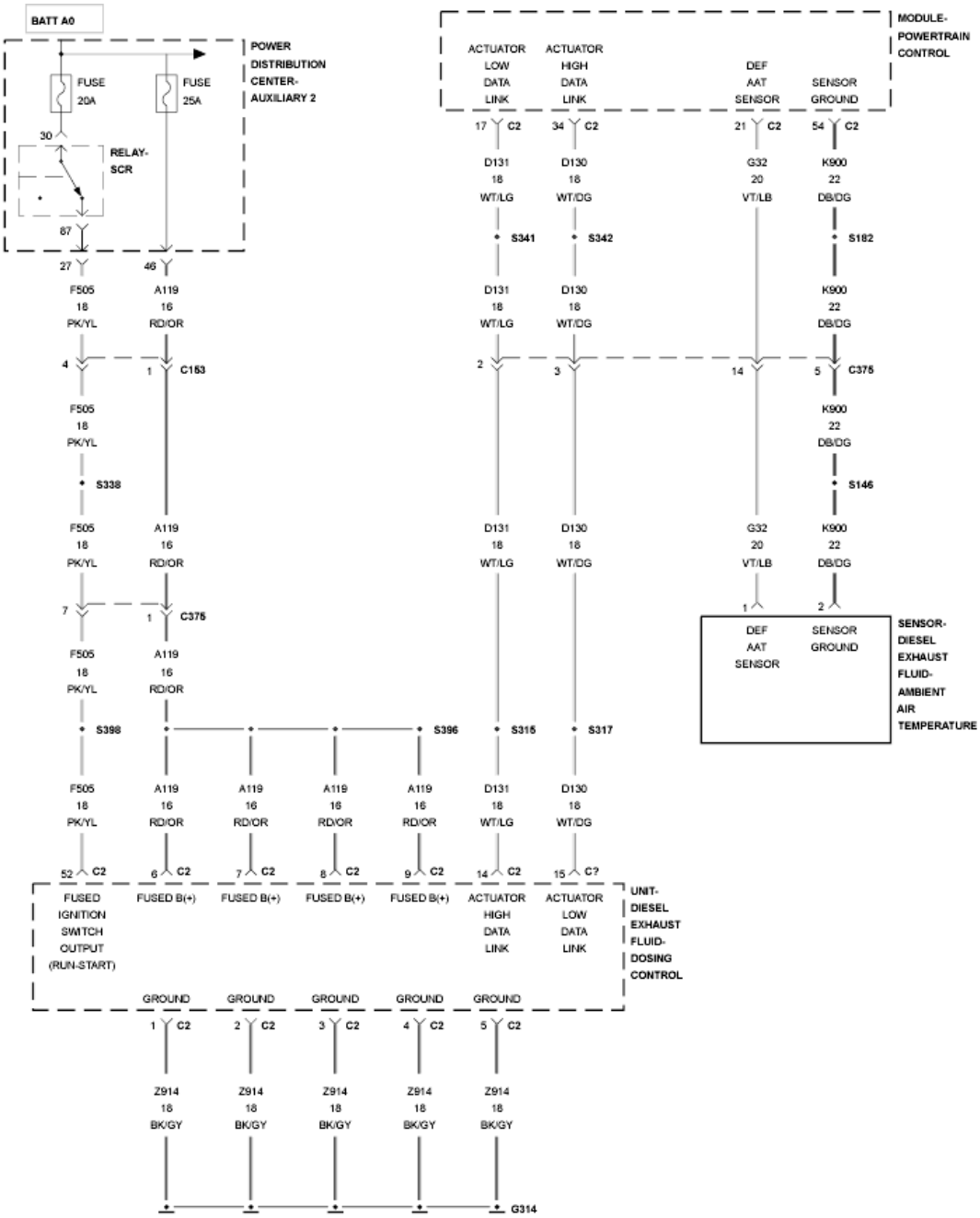

Fig. 13: Diesel Exhaust Fluid (DEF) Dosing Control Unit Wiring Diagram
Courtesy of CHRYSLER GROUP, LLC

For a complete wiring diagram, **refer to appropriate SYSTEM WIRING DIAGRAMS article** .

THEORY OF OPERATION

The Diesel Exhaust Fluid (DEF) Ambient Air Temperature Sensor is mounted to the DEF Supply Pump Assembly bracket. The Powertrain Control Module provides a 5-Volt Signal and a sensor ground circuit for the DEF Ambient Air Temperature Sensor. The DEF Ambient Air Temperature Sensor signal is provided to the

DEF Dosing Control Unit via the PCM. The DEF Dosing Control Unit uses this information along with the diesel exhaust fluid temperature information to determine when the DEF System heaters need to be turned on. The PCM will turn on the MIL Lamp immediately after the monitor runs and fails and the PCM will substitute a default value for the DEF Ambient Air Temperature Sensor.

WHEN MONITORED:

There are two for this DTC. The first monitor runs at initial key on after an eight hours cold soak. The DEF Ambient Air Temperature Sensor is compared to the other temperature sensors. The second monitor runs after the engine is running. The PCM looks for a change in temperature over time.

SET CONDITION:

The Powertrain Control Module (PCM) detects that the DEF Ambient Air Temperature Sensor is out of range as compared to the other temperature sensors at key on or is not changing over time.

POSSIBLE CAUSES

Possible Causes
HIGH RESISTANCE IN THE (G32) DEF AMBIENT AIR TEMPERATURE SENSOR SIGNAL CIRCUIT
HIGH RESISTANCE IN THE (K900) DEF AMBIENT AIR TEMPERATURE SENSOR GROUND CIRCUIT
DEF AMBIENT AIR TEMPERATURE SENSOR SIGNAL CIRCUIT
POWERTRAIN CONTROL MODULE (PCM)

Always perform the Pre-Diagnostic Troubleshooting procedure before proceeding. Refer to PRE-DIAGNOSTIC TROUBLESHOOTING PROCEDURE - 6.7L .

DIAGNOSTIC TEST

1. **ACTIVE DTC**

   NOTE: If there are any 5-Volt supply DTCs present, repair those DTCs before proceeding with this test.

   1. Turn the ignition on.
   2. With the scan tool, read DTCs.

      Is the DTC active?

      Yes

      - Go To 2.

      No

- Perform the INTERMITTENT CONDITION - 6.7L diagnostic procedure. Refer to **INTERMITTENT CONDITION - 6.7L** .

2. **CHECK THE DEF AMBIENT AIR TEMPERATURE SENSOR**
   1. With the scan tool, erase DTCs.
   2. Turn the ignition off.
   3. Disconnect the DEF Ambient Air Temperature Sensor harness connector.
   4. Turn the ignition on and wait 30 seconds while monitoring the scan tool.
   5. Use a jumper and connect the DEF Ambient Air Temperature Sensor Signal circuit to the DEF Ambient Air Temperature Sensor Ground circuit at the DEF Ambient Air Temperature Sensor harness connector and monitor the scan tool for 30 seconds.

      Did the P00DC-DEF AMBIENT AIR TEMPERATURE SENSOR HIGH set with the sensor disconnected and the P00DB-DEF AMBIENT AIR TEMPERATURE SENSOR LOW set with the jumper in place?

      Yes

      - Replace the DEF Ambient Air Temperature Sensor in accordance with the service information. Refer to **SENSOR, DIESEL EXHAUST FLUID AMBIENT TEMPERATURE, REMOVAL** .
      - Perform the POWERTRAIN VERIFICATION TEST - 6.7L. Refer to **POWERTRAIN VERIFICATION TEST - 6.7L** .

      No

      - Go To 3.

3. **CHECK THE (G32) DEF AMBIENT AIR TEMPERATURE SENSOR SIGNAL CIRCUIT FOR AN OPEN/HIGH RESISTANCE**

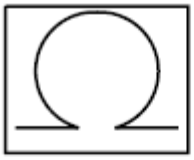

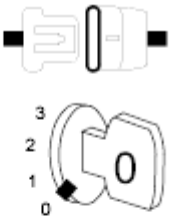

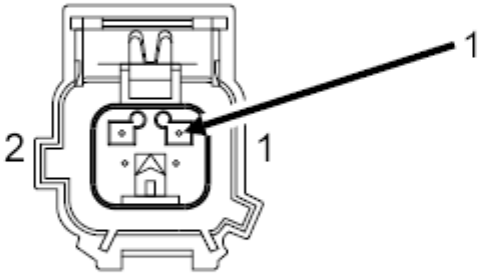

SENSOR-
DIESEL
EXHAUST FLUID-
AMBIENT AIR
TEMPERATURE
(6.7L)

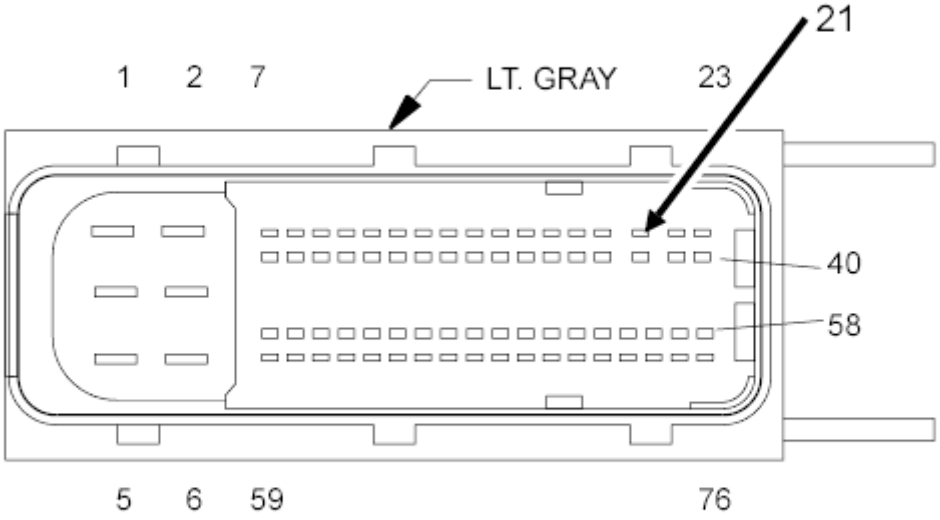

MODULE-
POWERTRAIN
CONTROL C2
(6.7L)

Fig. 14: Checking DEF Ambient Air Temperature Sensor Signal Circuit For An Open Or High Resistance
Courtesy of CHRYSLER GROUP, LLC

1. Turn the ignition off.
2. Disconnect the PCM C2 harness connector.
3. Measure the resistance of the (G32) DEF Ambient Air Temperature Sensor Signal circuit between the DEF Ambient Air Temperature Sensor harness connector and the PCM C2 harness connector.

   Is the resistance below 5.0 Ohms?

   Yes

   - Go To 4.

   No

   - Repair the (G32) DEF Ambient Air Temperature Sensor Signal circuit for an open or high resistance.
   - Perform the POWERTRAIN VERIFICATION TEST - 6.7L. Refer to **POWERTRAIN VERIFICATION TEST - 6.7L** .

4. **CHECK THE (K900) DEF AMBIENT AIR TEMPERATURE SENSOR GROUND CIRCUIT FOR AN OPEN/HIGH RESISTANCE**

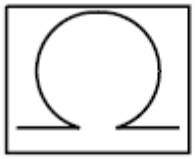

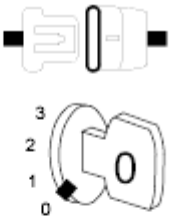

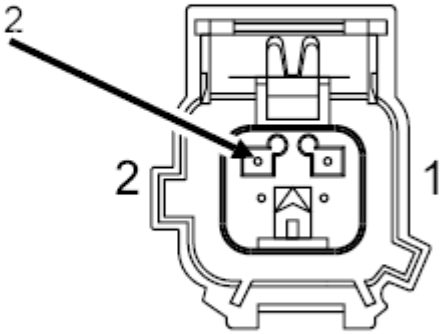

SENSOR-
DIESEL
EXHAUST FLUID-
AMBIENT AIR
TEMPERATURE
(6.7L)

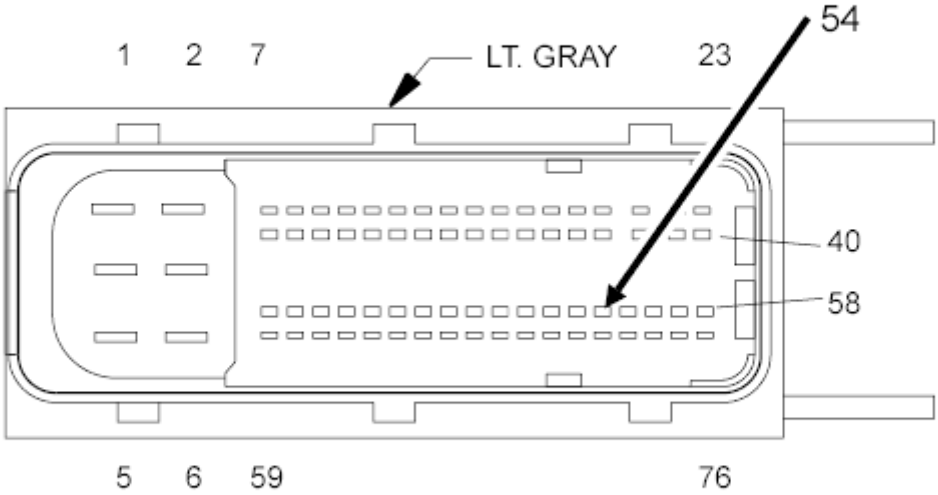

MODULE-
POWERTRAIN
CONTROL C2
(6.7L)

Fig. 15: Checking DEF Ambient Air Temperature Sensor Ground Circuit For An Open Or High Resistance
Courtesy of CHRYSLER GROUP, LLC

1. Measure the resistance of the (K900) DEF Ambient Air Temperature Sensor Ground circuit between the DEF Ambient Air Temperature Sensor harness connector and the PCM C2 harness connector.

   Is the resistance below 5.0 Ohms?

   Yes

   - Replace the Powertrain Control Module in accordance with the service information. Refer to **MODULE, POWERTRAIN CONTROL, 6.7L DIESEL, REMOVAL** .
   - Perform the POWERTRAIN VERIFICATION TEST - 6.7L. Refer to **POWERTRAIN VERIFICATION TEST - 6.7L** .

   No

   - Repair the (K900) DEF Ambient Air Temperature Sensor Ground circuit for an open or high resistance.
   - Perform the POWERTRAIN VERIFICATION TEST - 6.7L. Refer to **POWERTRAIN VERIFICATION TEST - 6.7L** .

P00DB-AMBIENT AIR TEMPERATURE SENSOR CIRCUIT LOW

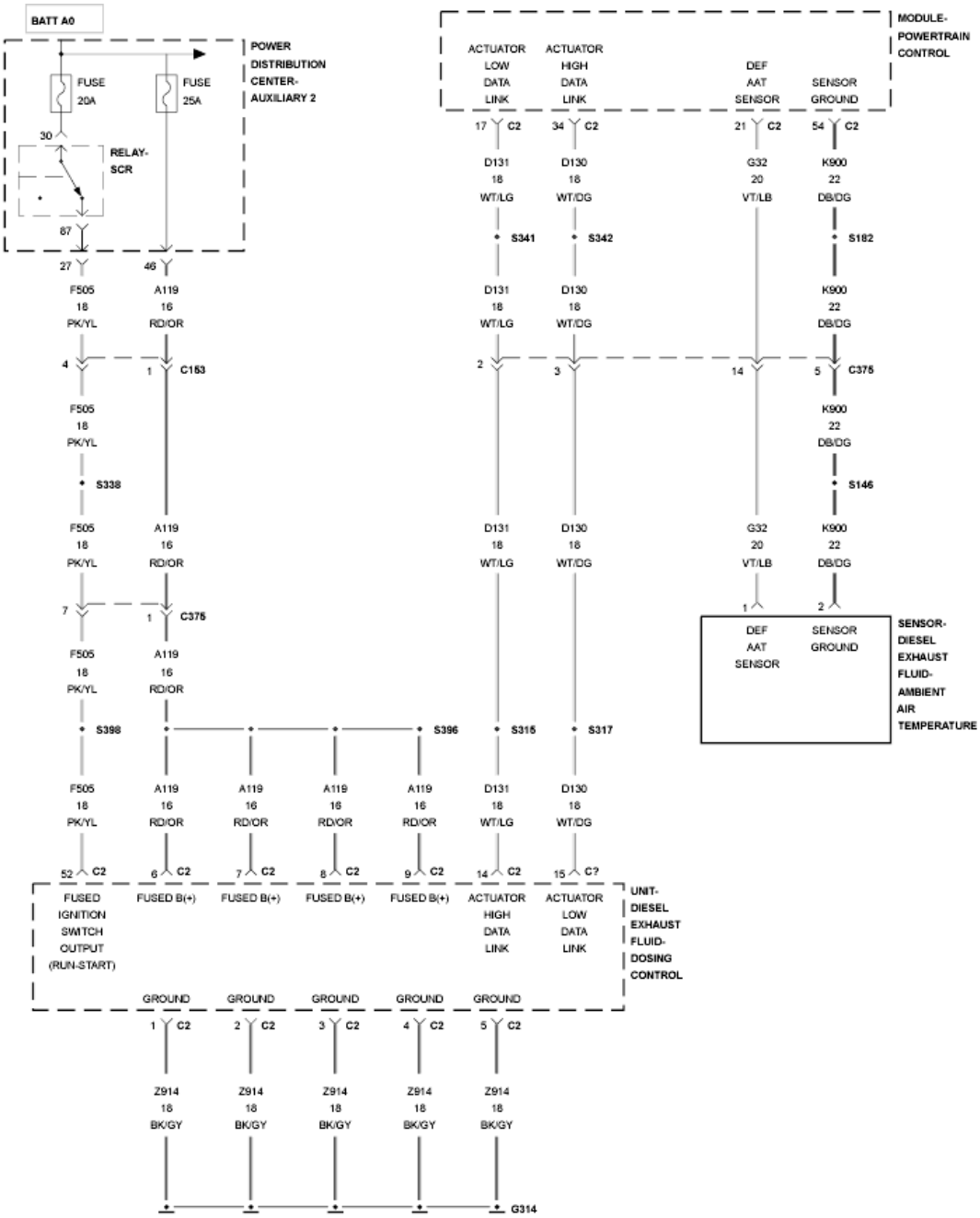

Fig. 16: Diesel Exhaust Fluid (DEF) Dosing Control Unit Wiring Diagram
Courtesy of CHRYSLER GROUP, LLC

For a complete wiring diagram, **refer to appropriate SYSTEM WIRING DIAGRAMS article** .

THEORY OF OPERATION

The Diesel Exhaust Fluid (DEF) Ambient Air Temperature Sensor is mounted to the DEF Supply Pump Assembly bracket. The Powertrain Control Module provides a 5-Volt Signal and a sensor ground circuit for the DEF Ambient Air Temperature Sensor. The DEF Ambient Air Temperature Sensor signal is provided to the

DEF Dosing Control Unit via the PCM. The DEF Dosing Control Unit uses this information along with the diesel exhaust fluid temperature information to determine if the Selective Catalytic Reduction (SCR) system is required.

WHEN MONITORED:

With the ignition on.

SET CONDITION:

The Powertrain Control Module detects that the DEF Ambient Air Temperature Sensor signal voltage is below 0.12 of a volt for one second.

POSSIBLE CAUSES

Possible Causes
(G32) DEF AMBIENT AIR TEMPERATURE SENSOR SIGNAL CIRCUIT SHORTED TO GROUND
(G32) DEF AMBIENT AIR TEMPERATURE SENSOR SIGNAL CIRCUIT SHORTED TO THE (K900) DEF AMBIENT AIR TEMPERATURE SENSOR GROUND CIRCUIT
DEF AMBIENT AIR TEMPERATURE SENSOR
POWERTRAIN CONTROL MODULE (PCM)

Always perform the Pre-Diagnostic Troubleshooting procedure before proceeding. Refer to PRE-DIAGNOSTIC TROUBLESHOOTING PROCEDURE - 6.7L .

DIAGNOSTIC TEST

1. **ACTIVE DTC**

   NOTE: If there are any 5-Volt supply DTCs present, repair those DTCs before proceeding with this test.

   1. Turn the ignition on.
   2. With the scan tool, record all Freeze frame data.
   3. With the scan tool, erase DTCs.
   4. Turn the ignition off for 75 seconds.
   5. Turn the ignition on.
   6. With the scan tool, read DTCs.

   Did the DTC return?

   Yes

   - Go To 2.

No

- Perform the INTERMITTENT CONDITION - 6.7L diagnostic procedure. Refer to **INTERMITTENT CONDITION - 6.7L** .

2. **CHECK THE DEF AMBIENT AIR TEMPERATURE SENSOR**
   1. With the scan tool, Erase DTCs.
   2. Turn the ignition off.
   3. Disconnect the DEF Ambient Air Temperature Sensor harness connector.
   4. Turn the ignition on.
   5. With the scan tool, View DTCs.

   Did the DTC P00DC-DEF AMBIENT AIR TEMPERATURE SENSOR HIGH set as active?

   Yes

   - Replace the DEF Ambient Air Temperature Sensor in accordance with the service information. Refer to **SENSOR, DIESEL EXHAUST FLUID AMBIENT TEMPERATURE, REMOVAL** .
   - Perform the POWERTRAIN VERIFICATION TEST - 6.7L. Refer to **POWERTRAIN VERIFICATION TEST - 6.7L** .

   No

   - Go To 3.

3. **CHECK THE (G32) DEF AMBIENT AIR TEMPERATURE SENSOR SIGNAL CIRCUIT FOR A SHORT TO GROUND**

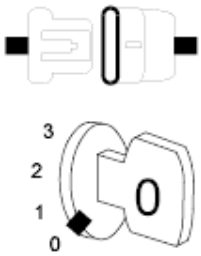

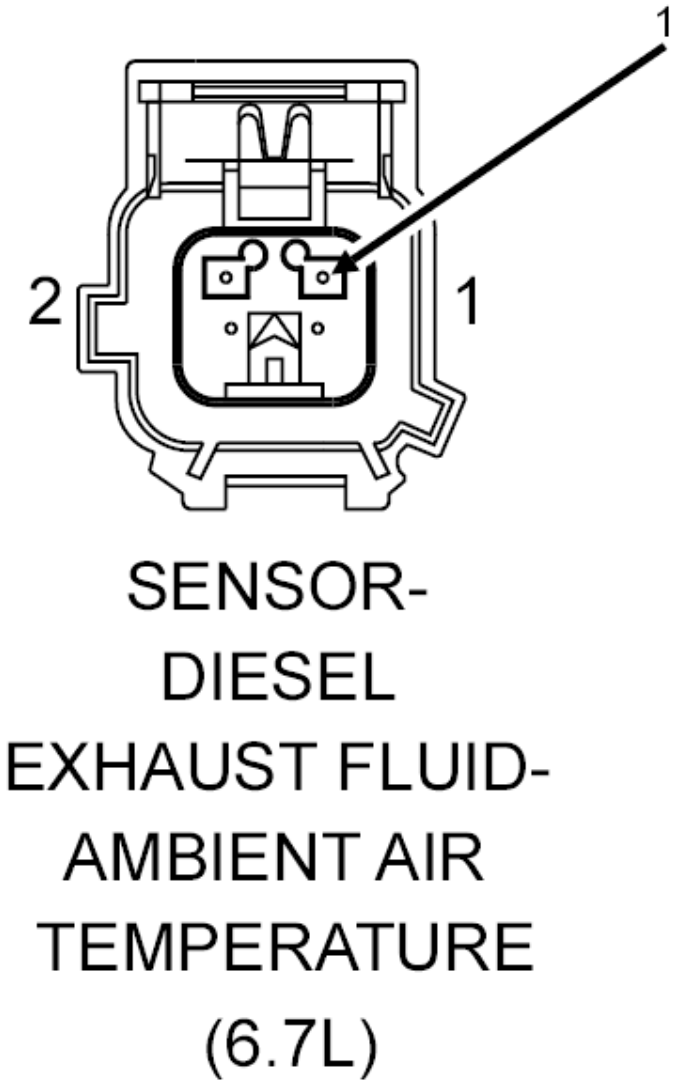

Fig. 17: Checking DEF Ambient Air Temperature Sensor Signal Circuit For A Short To Ground
Courtesy of CHRYSLER GROUP, LLC

1. Turn the ignition off.
2. Disconnect the PCM C2 harness connector.

NOTE: Check connectors - Clean/repair as necessary.

3. Measure the resistance between ground and the (G32) DEF Ambient Air Temperature Sensor Signal circuit at the DEF Ambient Air Temperature Sensor harness connector.

   Is the resistance above 10k Ohms?

   Yes

   - Go To 4.

   No

   - Repair the (G32) DEF Ambient Air Temperature Sensor Signal circuit for a short to ground.
   - Perform the POWERTRAIN VERIFICATION TEST - 6.7L. Refer to **POWERTRAIN VERIFICATION TEST - 6.7L** .

4. **CHECK FOR THE (G32) DEF AMBIENT AIR TEMPERATURE SENSOR SIGNAL CIRCUIT SHORTED TO ANOTHER CIRCUIT**
   1. Measure the resistance between the (G32) DEF Ambient Air Temperature Sensor Signal circuit and the all other circuits at the PCM C2 harness connector.

      Is the resistance above 10k Ohms?

      Yes

      - Replace the Powertrain Control Module in accordance with the service information. Refer to **MODULE, POWERTRAIN CONTROL, 6.7L DIESEL, REMOVAL** .
      - Perform the POWERTRAIN VERIFICATION TEST - 6.7L. Refer to **POWERTRAIN VERIFICATION TEST - 6.7L** .

      No

      - Repair the short between the (G32) DEF Ambient Air Temperature Sensor Signal circuit and the circuit that measured below 10k Ohms.
      - Perform the POWERTRAIN VERIFICATION TEST - 6.7L. Refer to **POWERTRAIN VERIFICATION TEST - 6.7L** .

P00DC-AMBIENT AIR TEMPERATURE SENSOR CIRCUIT HIGH

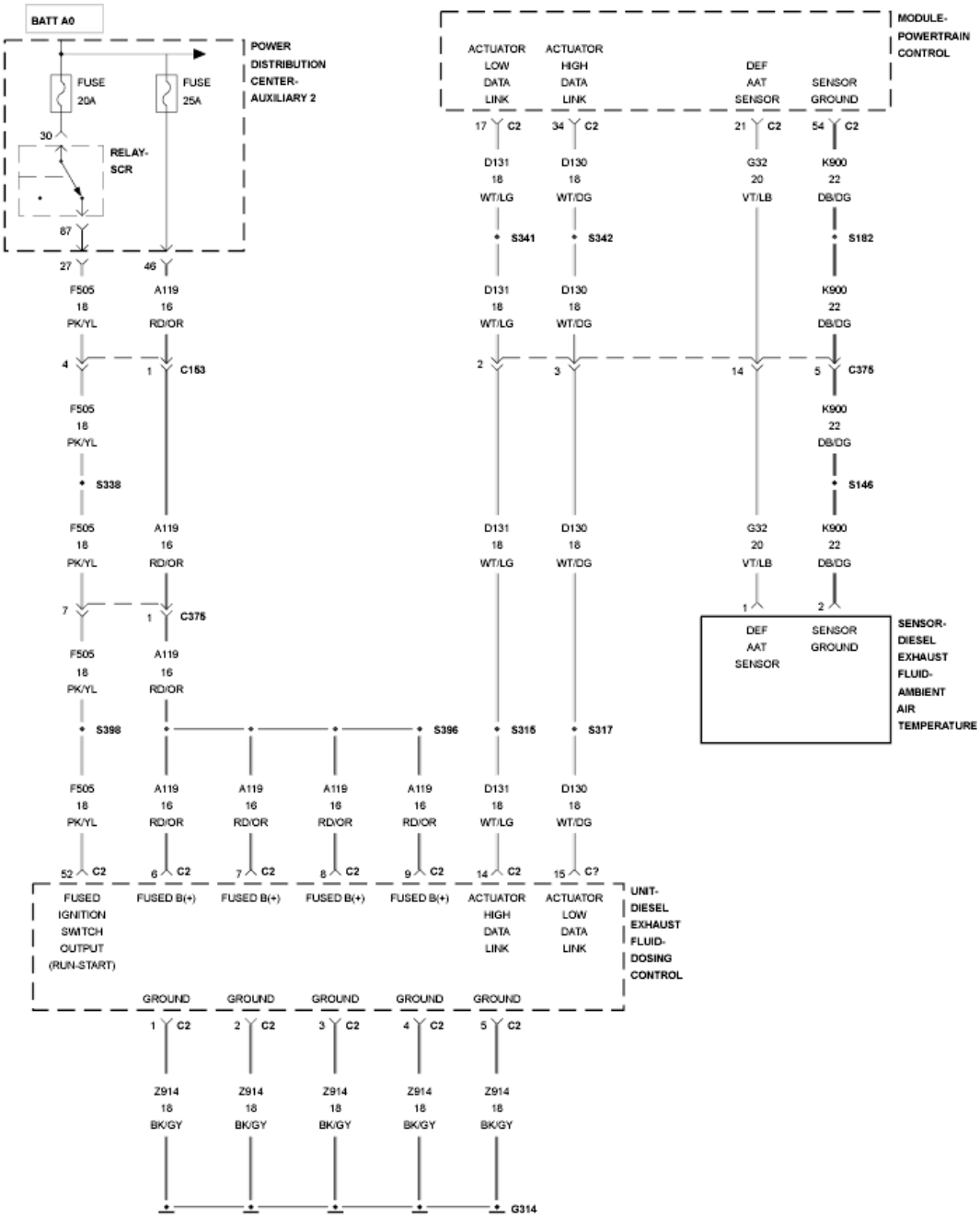

Fig. 18: Diesel Exhaust Fluid (DEF) Dosing Control Unit Wiring Diagram
Courtesy of CHRYSLER GROUP, LLC

For a complete wiring diagram, **refer to appropriate SYSTEM WIRING DIAGRAMS article** .

THEORY OF OPERATION

The Diesel Exhaust Fluid (DEF) Ambient Air Temperature Sensor is mounted to the DEF Supply Pump Assembly bracket. The Powertrain Control Module provides a 5-Volt Signal and a sensor ground circuit for the DEF Ambient Air Temperature Sensor. The DEF Ambient Air Temperature Sensor signal is provided to the

DEF Dosing Control Unit via the PCM. The DEF Dosing Control Unit uses this information along with the diesel exhaust fluid temperature information to determine if the Selective Catalytic Reduction (SCR) system is required.

WHEN MONITORED:

With the ignition on.

SET CONDITION:

The Powertrain Control Module detects that the DEF Ambient Air Temperature Sensor is above 4.8 Volts for one second.

POSSIBLE CAUSES

Possible Causes
(G32) DEF AMBIENT AIR TEMPERATURE SENSOR SIGNAL CIRCUIT SHORTED TO VOLTAGE
(G32) DEF AMBIENT AIR TEMPERATURE SENSOR SIGNAL CIRCUIT OPEN/HIGH RESISTANCE
(K900) DEF AMBIENT AIR TEMPERATURE SENSOR GROUND CIRCUIT OPEN/HIGH RESISTANCE
DEF AMBIENT AIR TEMPERATURE SENSOR
POWERTRAIN CONTROL MODULE (PCM)

Always perform the Pre-Diagnostic Troubleshooting procedure before proceeding. Refer to PRE-DIAGNOSTIC TROUBLESHOOTING PROCEDURE - 6.7L .

DIAGNOSTIC TEST

1. **ACTIVE DTC**

   NOTE: If there are any 5-Volt supply DTCs present, repair those DTCs before proceeding with this test.

   1. Turn the ignition on.
   2. With the scan tool, record all Freeze frame data.
   3. With the scan tool, erase DTCs.
   4. Turn the ignition off for 75 seconds.
   5. Turn the ignition on.
   6. With the scan tool, read DTCs.

   Did the DTC return?

   Yes

- Go To 2.

No

- Perform the INTERMITTENT CONDITION - 6.7L diagnostic procedure. Refer to **INTERMITTENT CONDITION - 6.7L** .

2. **CHECK THE (G32) DEF AMBIENT AIR TEMPERATURE SENSOR SIGNAL CIRCUIT FOR A SHORT TO VOLTAGE**
   1. Disconnect the DEF Ambient Air Temperature Sensor harness connector.

      NOTE: Check connectors - Clean/repair as necessary.

   2. With a voltmeter connected to ground, measure the voltage of the (G32) DEF Ambient Air Temperature Sensor Signal circuit at the DEF Ambient Air Temperature Sensor harness connector.

      Does the voltage measure above 5.1 Volts?

      Yes

      - Repair the (G32) DEF Ambient Air Temperature Sensor Signal circuit for a short to voltage.
      - Perform the POWERTRAIN VERIFICATION TEST - 6.7L. Refer to **POWERTRAIN VERIFICATION TEST - 6.7L** .

      No

      - Go To 3.

3. **CHECK THE DEF AMBIENT AIR TEMPERATURE SENSOR**
   1. With the scan tool, erase DTCs.
   2. While monitoring with scan tool, use a jumper and connect the DEF Ambient Air Temperature Sensor Signal circuit to the DEF Ambient Air Temperature Sensor Ground circuit at the DEF Ambient Air Temperature Sensor harness connector.

      NOTE: Be careful not to spread the terminals.

      Did the DTC P00DB-DEF AMBIENT AIR TEMPERATURE SENSOR LOW set as active or pending?

      Yes

      - Replace the DEF Ambient Air Temperature Sensor in accordance with the service information. Refer to **SENSOR, DIESEL EXHAUST FLUID AMBIENT TEMPERATURE, REMOVAL** .
      - Perform the POWERTRAIN VERIFICATION TEST - 6.7L. Refer to **POWERTRAIN VERIFICATION TEST - 6.7L** .

No

- Go To 4.

4. **CHECK THE (G32) DEF AMBIENT AIR TEMPERATURE SENSOR SIGNAL CIRCUIT FOR AN OPEN/HIGH RESISTANCE**

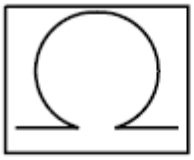

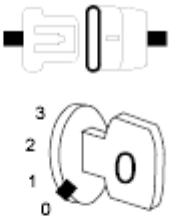

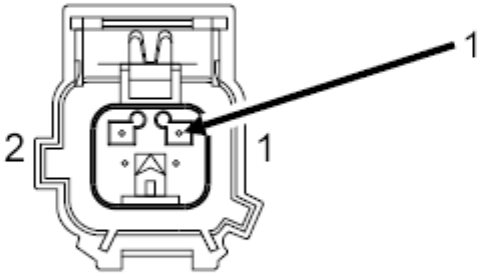

SENSOR-
DIESEL
EXHAUST FLUID-
AMBIENT AIR
TEMPERATURE
(6.7L)

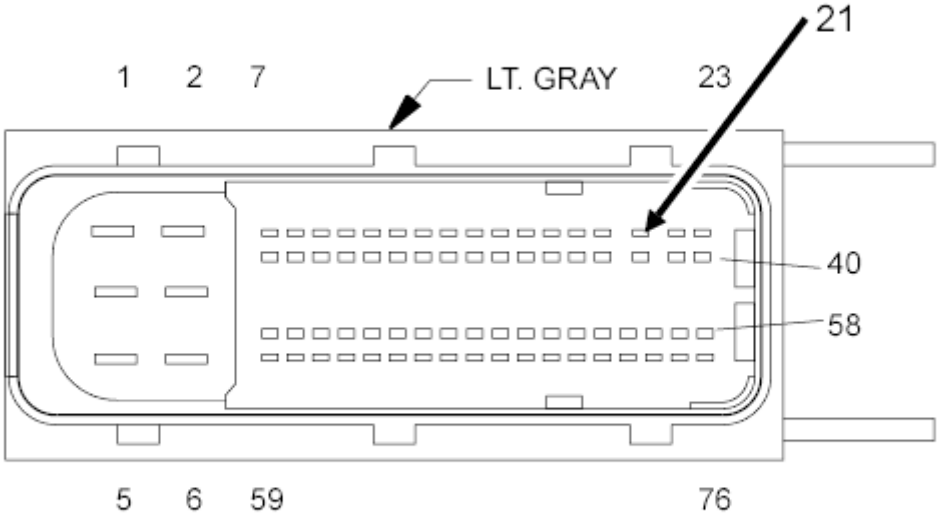

MODULE-
POWERTRAIN
CONTROL C2
(6.7L)

Fig. 19: Checking DEF Ambient Air Temperature Sensor Signal Circuit For An Open Or High Resistance
Courtesy of CHRYSLER GROUP, LLC

1. Turn the ignition off.
2. Disconnect the PCM C2 harness connector.
3. Measure the resistance of the (G32) DEF Ambient Air Temperature Sensor Signal circuit between the DEF Ambient Air Temperature Sensor harness connector and the PCM C2 harness connector.

   Is the resistance below 5.0 Ohms?

   Yes

   - Go To 5.

   No

   - Repair the (G32) DEF Ambient Air Temperature Sensor Signal circuit for an open or high resistance.
   - Perform the POWERTRAIN VERIFICATION TEST - 6.7L. Refer to **POWERTRAIN VERIFICATION TEST - 6.7L** .

5. **CHECK THE (K900) DEF AMBIENT AIR TEMPERATURE SENSOR GROUND CIRCUIT FOR AN OPEN/HIGH RESISTANCE**

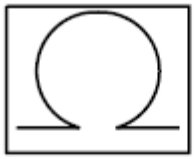

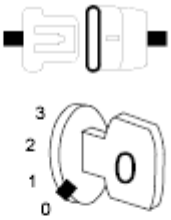

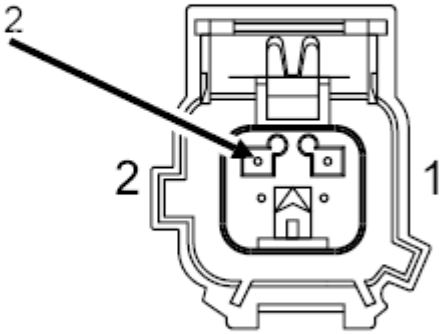

SENSOR-
DIESEL
EXHAUST FLUID-
AMBIENT AIR
TEMPERATURE
(6.7L)

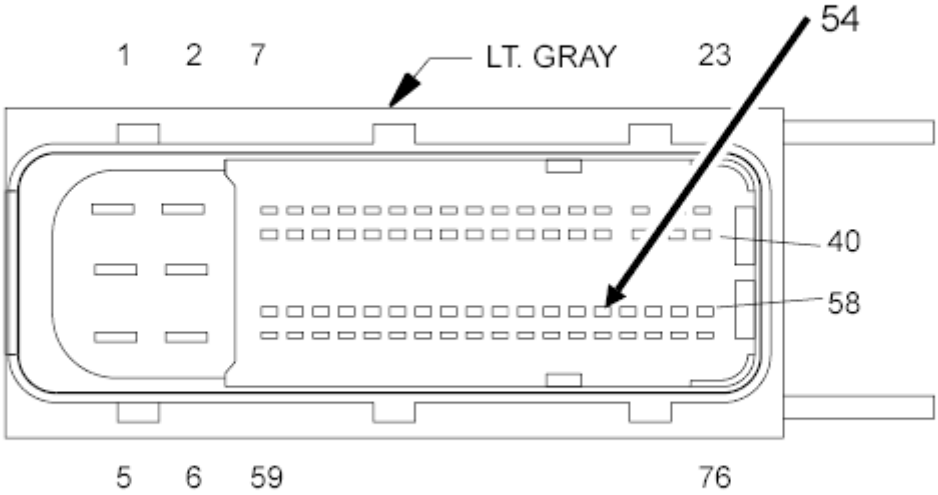

MODULE-
POWERTRAIN
CONTROL C2
(6.7L)

Fig. 20: Checking DEF Ambient Air Temperature Sensor Ground Circuit For An Open Or High Resistance
Courtesy of CHRYSLER GROUP, LLC

1. Measure the resistance of the (K900) DEF Ambient Air Temperature Sensor Ground circuit between the DEF Ambient Air Temperature Sensor harness connector and the PCM C2 harness connector.

   Is the resistance below 5.0 Ohms?

   Yes

   - Replace the Powertrain Control Module in accordance with the service information. Refer to **MODULE, POWERTRAIN CONTROL, 6.7L DIESEL, REMOVAL** .
   - Perform the POWERTRAIN VERIFICATION TEST - 6.7L. Refer to **POWERTRAIN VERIFICATION TEST - 6.7L** .

   No

   - Repair the (K900) DEF Ambient Air Temperature Sensor Ground circuit for an open or high resistance.
   - Perform the POWERTRAIN VERIFICATION TEST - 6.7L. Refer to **POWERTRAIN VERIFICATION TEST - 6.7L** .

P0101-MASS AIR FLOW SENSOR "A" CIRCUIT PERFORMANCE

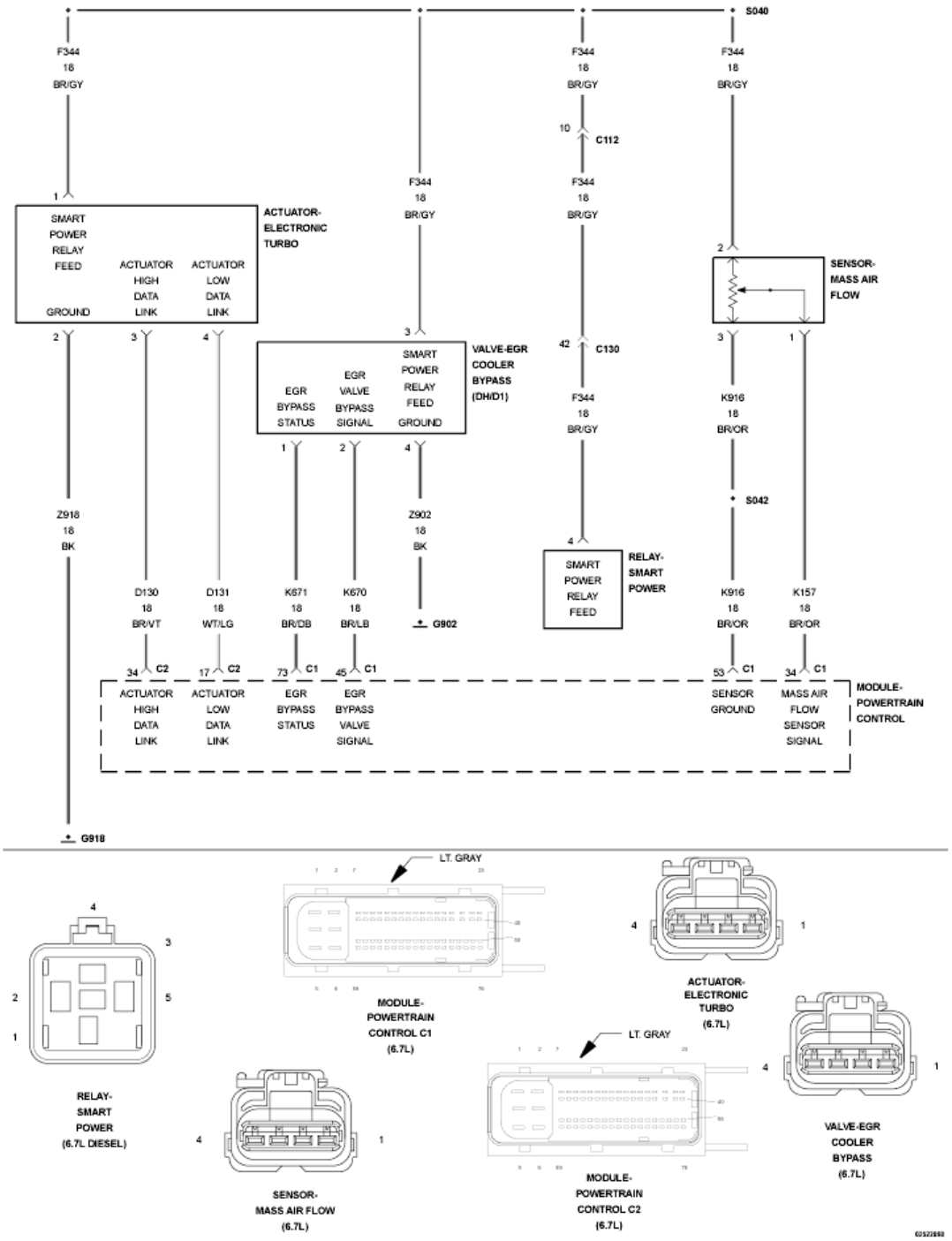

Fig. 21: Turbocharger Boost Control Circuit Schematic
Courtesy of CHRYSLER GROUP, LLC

For a complete wiring diagram, **refer to appropriate SYSTEM WIRING DIAGRAMS article** .

THEORY OF OPERATION

The Mass Air Flow Sensor is a frequency based device. A constant voltage is applied to a heated wire. This wire is positioned in the air stream and is heated by the electrical current that the voltage produces. As air flows

across it, it cools down. The heated wire or film is a positive temperature coefficient (ptc) resistor. This means that it's resistance drops when it's temperature drops. The drop in resistance allows more current to flow through it in order to maintain the programmed temperature. This current is changed to a frequency which is sent to the PCM and interpreted as air flow. Adjustments for air temperature and humidity are taken into consideration since they also affect the temperature of the heated wire or film. This diagnostic has two parts, a key on monitor and a monitor that runs in operating conditions when the EGR valve is closed. The key on monitor diagnostic fails if the Mass Air Flow Sensor reads a non-zero value at key on, engine off. The engine running monitor compares an estimated charge air flow value to the Mass Air Flow sensor reading. This monitor only runs when the EGR valve is commanded closed. During this time the MAF sensor value should equal the charge air flow estimate. The PCM will light the MIL lamp if this diagnostic runs and fails in two consecutive drive cycles. The PCM will turn off the MIL lamp when the diagnostic runs and passes in four consecutive drive cycles.

WHEN MONITORED:

Ignition on.

SET CONDITION:

With the engine running and EGR flow equal to zero, the Mass Air Flow sensor value does not equal the charge air flow estimate.

POSSIBLE CAUSES

Possible Causes
TURBOCHARGER, EGR OR INTAKE AIR SYSTEM RELATED DTCS
MAF SENSOR
AIR FILTER
AIR INTAKE LEAK

Always perform the Pre-Diagnostic Troubleshooting procedure before proceeding. Refer to PRE-DIAGNOSTIC TROUBLESHOOTING PROCEDURE - 6.7L .

DIAGNOSTIC TEST

1. **ACTIVE DTC**

NOTE: **If there are any other EGR, Turbocharger, or Intake system DTCs present, repair those DTCs before proceeding.**

1. Turn the ignition on.
2. With the scan tool, record all Freeze frame data.
3. With the scan tool, erase DTCs.
4. Turn the ignition off for 75 seconds.
5. Start the engine attempt to duplicate the conditions that set the DTC.
6. With the scan tool, read DTCs.

Did the DTC reset?

Yes

- Go To 2.

No

- Perform the INTERMITTENT CONDITION - 6.7L diagnostic procedure. Refer to **INTERMITTENT CONDITION - 6.7L** .

2. **CHECK THE MAF SENSOR**
   1. Start the engine. Warm the engine up to operating temperature and then let it idle for five minutes.

      NOTE: This is how long it takes for the EGR Valve to close.

   2. With the scan tool in Data Display, verify that the EGR Valve is at 0%.
   3. With the scan tool, read the MAF Sensor value.

      Does the Mass Air Flow Sensor read from 3.0 - 6.75 lb/min for an auto transmission, or 3.5 - 7.5 lb/min for a manual transmission?

      Yes

      - Go To 3.

      No

      - Replace the Mass Air Flow Sensor in accordance with the service information.
      - Perform the POWERTRAIN VERIFICATION TEST - 6.7L. Refer to **POWERTRAIN VERIFICATION TEST - 6.7L** .

3. **CHECK THE AIR FILTER**
   1. Remove lid from air filter box.
   2. Remove air filter and inspect for excessive debris or filter media damage.
   3. Make sure the filter was installed properly.

      Was the air filter damaged or full of debris?

      Yes

      - Replace the Air Filter.
      - Perform the POWERTRAIN VERIFICATION TEST - 6.7L. Refer to **POWERTRAIN VERIFICATION TEST - 6.7L** .

      No

- Go To 4.

4. **CHECK THE MAF SENSOR**
    1. Turn the Ignition off.
    2. Remove MAF sensor from the air filter box.

    Is it free from debris?

    Yes

    - Go To 5.

    No

    - Clean the Mass Air Flow Sensor using low pressure air and reinstall, repair complete.
    - Perform the POWERTRAIN VERIFICATION TEST - 6.7L. Refer to **POWERTRAIN VERIFICATION TEST - 6.7L** .
5. **CHECK FOR AN AIR LEAK IN THE INTAKE SYSTEM**
    1. Perform the INTAKE AIR SYSTEM PRESSURE TEST procedure. Refer to **DIAGNOSIS AND TESTING, 6.7L** .
    2. Any leak between the air box to the intake manifold could cause this fault.

    Were there any Intake Air System leaks?

    Yes

    - Repair the leak in the Intake Air System.
    - Perform the POWERTRAIN VERIFICATION TEST - 6.7L. Refer to **POWERTRAIN VERIFICATION TEST - 6.7L** .

    No

    - Replace the Mass Air Flow Sensor in accordance with the service information.
    - Perform the POWERTRAIN VERIFICATION TEST - 6.7L. Refer to **POWERTRAIN VERIFICATION TEST - 6.7L** .

P0102-MASS AIR FLOW SENSOR "A" CIRCUIT LOW

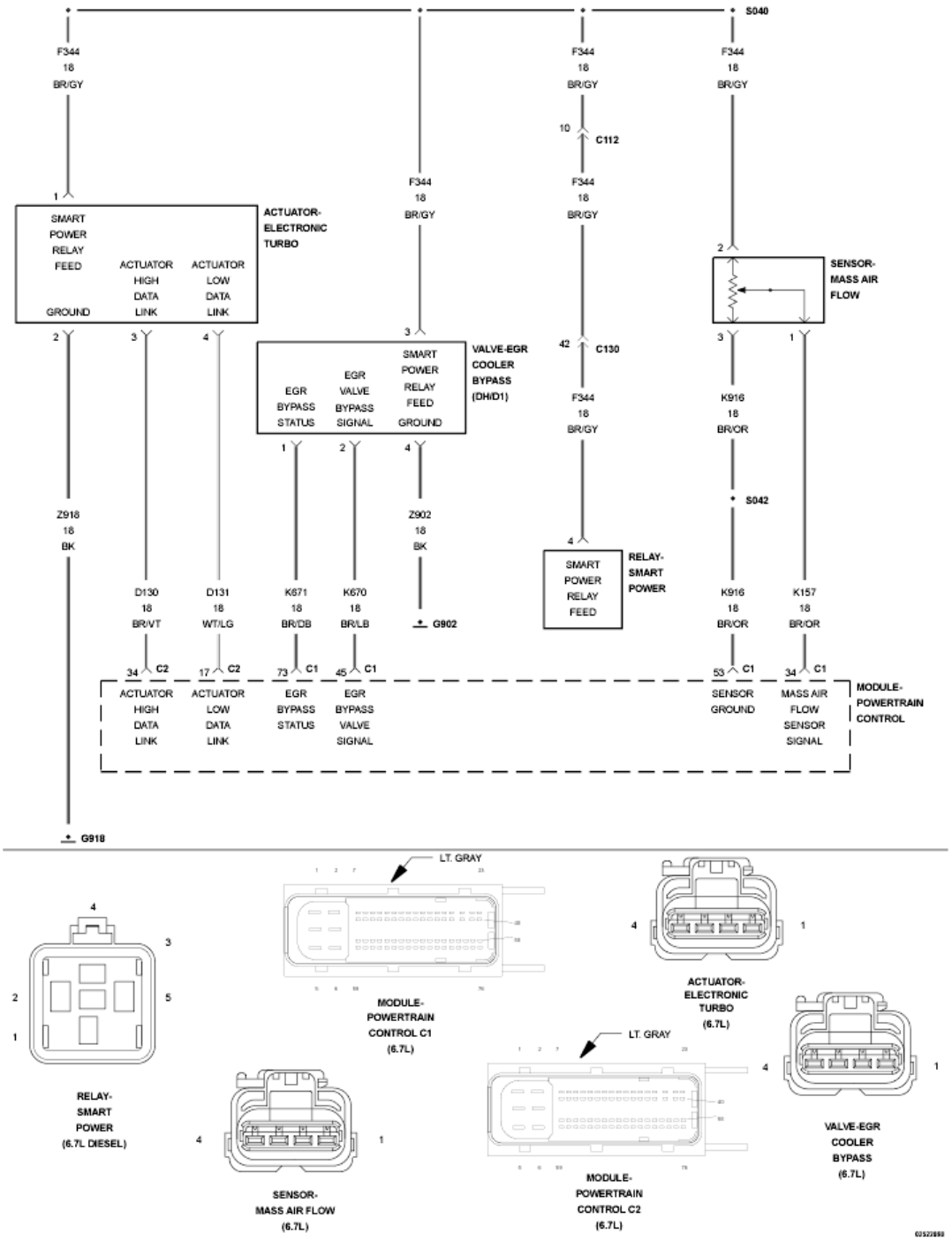

Fig. 22: Turbocharger Boost Control Circuit Schematic
Courtesy of CHRYSLER GROUP, LLC

For a complete wiring diagram, **refer to appropriate SYSTEM WIRING DIAGRAMS article** .

THEORY OF OPERATION

The Mass Air Flow (MAF) Sensor is a frequency based device. A constant voltage is applied to a heated wire. This wire is positioned in the air stream and is heated by the electrical current that the voltage produces. As air

flows across it, it cools down. The heated wire or film is a Positive Temperature Coefficient (PTC) resistor, which means that the resistance of it drops when the temperature drops. The drop in resistance allows more current to flow through it in order to maintain the programmed temperature. The current flow is changed to a frequency, which is sent to the Powertrain Control Module (PCM) and interpreted as air flow. Adjustments for air temperature and humidity are taken into consideration, since they also affect the temperature of the heated wire or film. The engine running monitor compares an estimated fresh air flow value to the Mass Air Flow Sensor reading. The PCM will light the Malfunction Indicator Lamp (MIL) immediately after this diagnostic runs and fails. The PCM will turn off the MIL when the diagnostic runs and passes in four consecutive drive cycles.

WHEN MONITORED:

When the PCM is powered on.

SET CONDITION:

The frequency detected is below what is allowable for the sensor.

POSSIBLE CAUSES

Possible Causes
INTAKE OR EXHAUST SYSTEM LEAKING OR RESTRICTED
(F344) SMART POWER RELAY OUTPUT CIRCUIT OPEN
(F344) SMART POWER RELAY OUTPUT CIRCUIT SHORTED TO THE (K916) RETURN CIRCUIT
(K157) MAF SENSOR SIGNAL CIRCUIT OPEN
(K157) MAF SENSOR SIGNAL CIRCUIT SHORTED TO THE (K916) RETURN CIRCUIT
(K157) MAF SENSOR SIGNAL CIRCUIT SHORTED TO GROUND
MASS AIR FLOW (MAF) SENSOR
POWERTRAIN CONTROL MODULE (PCM)

Always perform the Pre-Diagnostic Troubleshooting procedure before proceeding. Refer to PRE-DIAGNOSTIC TROUBLESHOOTING PROCEDURE - 6.7L .

DIAGNOSTIC TEST

1. **ACTIVE DTC**
    1. Ignition on, engine not running.
    2. With the scan tool, erase DTCs.
    3. Start the engine and let idle for at least two minutes.
    4. With the scan tool, read DTCs.

    Did the DTC return?

    Yes

- Go To 2.

No

- Perform the INTERMITTENT CONDITION - 6.7L diagnostic procedure. Refer to **INTERMITTENT CONDITION - 6.7L** .

2. **CHECK THE (F344) SMART POWER RELAY OUTPUT CIRCUIT**
   1. Turn the ignition off.
   2. Disconnect the MAF harness connector.
   3. Turn the ignition on, engine not running.

   NOTE: Check connectors - Clean/repair as necessary.

   4. Measure the voltage of the (F344) Smart Power Relay Output circuit at the MAF Sensor harness connector.

   Is the voltage equal to battery voltage?

   Yes

   - Go To 3.

   No

   - Repair the (F344) Smart Power Relay Output circuit for an open or short to ground.
   - Perform the POWERTRAIN VERIFICATION TEST - 6.7L. Refer to **POWERTRAIN VERIFICATION TEST - 6.7L** .

3. **CHECK FOR THE (F344) SMART POWER RELAY OUTPUT CIRCUIT SHORTED TO THE (K916) RETURN CIRCUIT**

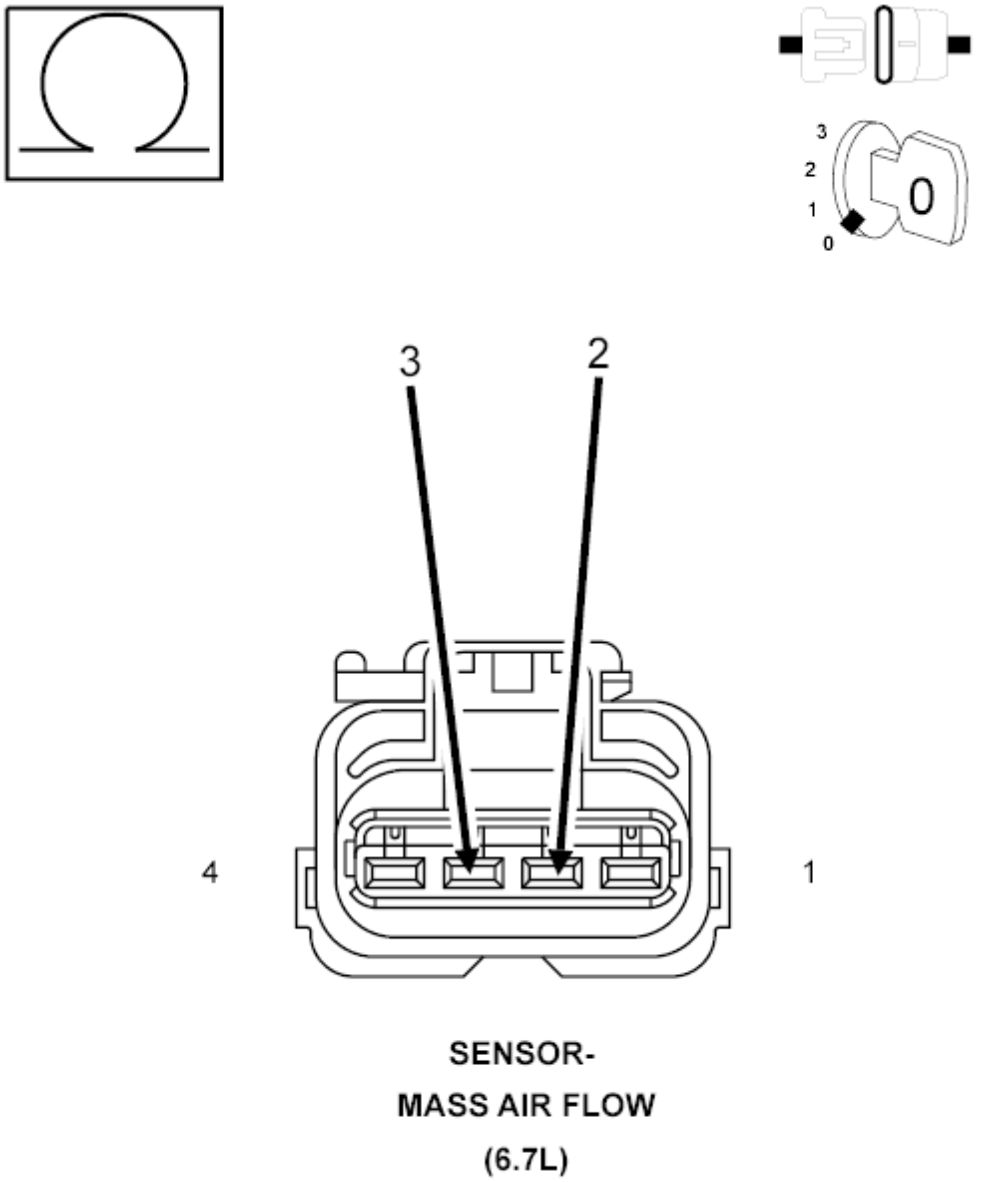

Fig. 23: Checking For Smart Power Relay Feed Circuit & Return Circuit Shorted
Courtesy of CHRYSLER GROUP, LLC

1. Turn the ignition off.
2. Disconnect the PCM C1 harness connector.
3. Measure the resistance between the (F344) Smart Power Relay Output circuit and (K916) Return circuit at the MAF Sensor harness connector.

   Is the resistance below 10k Ohms?

   Yes

- Repair the short between the (F344) Smart Power Relay Output circuit and (K916) Return circuit.
- Perform the POWERTRAIN VERIFICATION TEST - 6.7L. Refer to **POWERTRAIN VERIFICATION TEST - 6.7L** .

No

- Go To 4.

4. **CHECK FOR THE (K157) MAF SENSOR SIGNAL CIRCUIT SHORTED TO THE (K916) RETURN CIRCUIT**

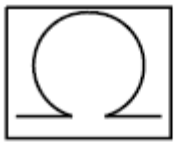

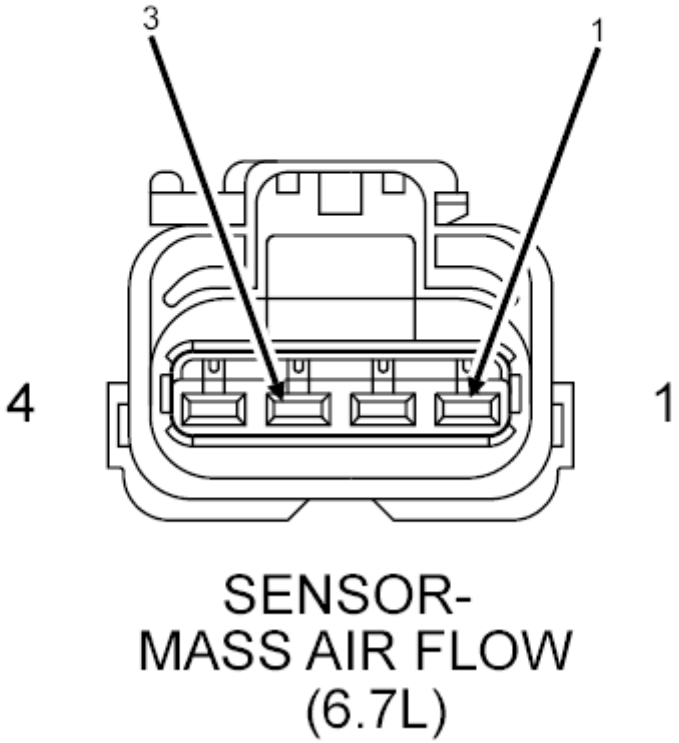

Fig. 24: Checking For MAF Sensor Signal Circuit Shorted To Return Circuit
Courtesy of CHRYSLER GROUP, LLC

1. Measure the resistance between the (K157) MAF Sensor Signal circuit and (K916) Return circuit at the MAF Sensor harness connector.

   Is the resistance below 10k Ohms?

   Yes

   - Repair the short between the (K157) MAF Sensor Signal Signal circuit and (K916) Return circuit.
   - Perform the POWERTRAIN VERIFICATION TEST - 6.7L. Refer to **POWERTRAIN VERIFICATION TEST - 6.7L** .

   No

   - Go To 5.

5. **CHECK THE (K157) MAF SENSOR SIGNAL CIRCUIT FOR AN OPEN/HIGH RESISTANCE**

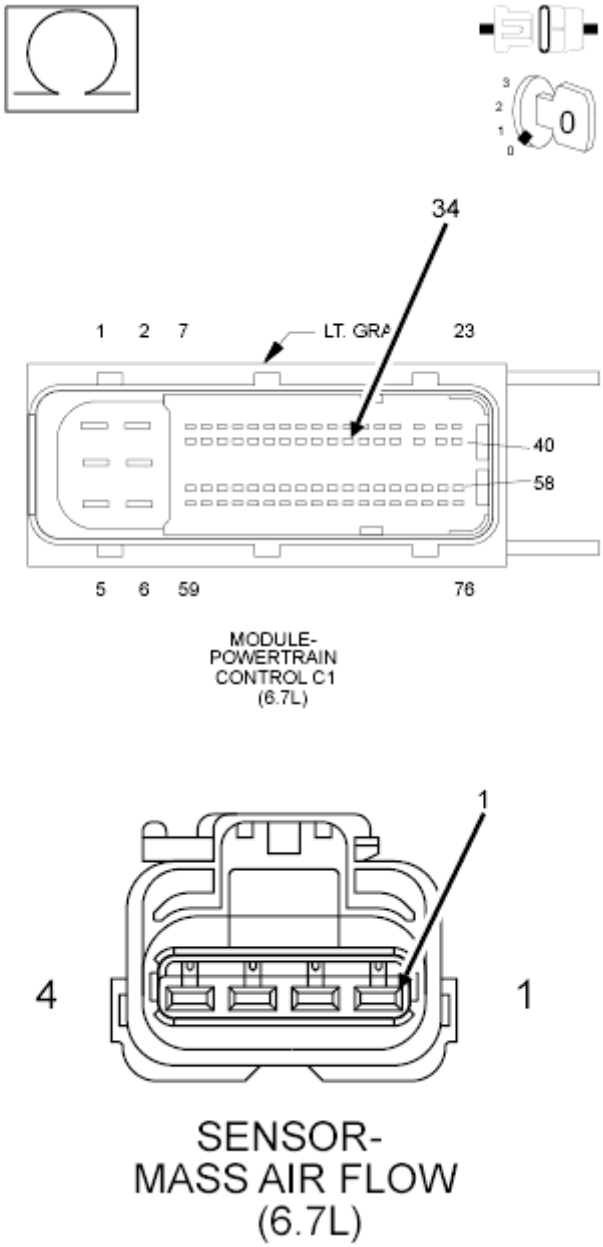

Fig. 25: Checking MAF Sensor Signal Circuit For An Open Or High Resistance
Courtesy of CHRYSLER GROUP, LLC

1. Measure the resistance of the (K157) MAF Sensor Signal circuit between the MAF Sensor harness connector and the PCM C1 harness connector.

   Is the resistance below 5.0 Ohms?

   Yes

   - Go To 6.

No

- Repair the (K157) MAF Sensor Signal circuit for an open or high resistance.
- Perform the POWERTRAIN VERIFICATION TEST - 6.7L. Refer to **POWERTRAIN VERIFICATION TEST - 6.7L** .

6. **CHECK THE (K157) MAF SENSOR SIGNAL CIRCUIT FOR A SHORT TO GROUND**

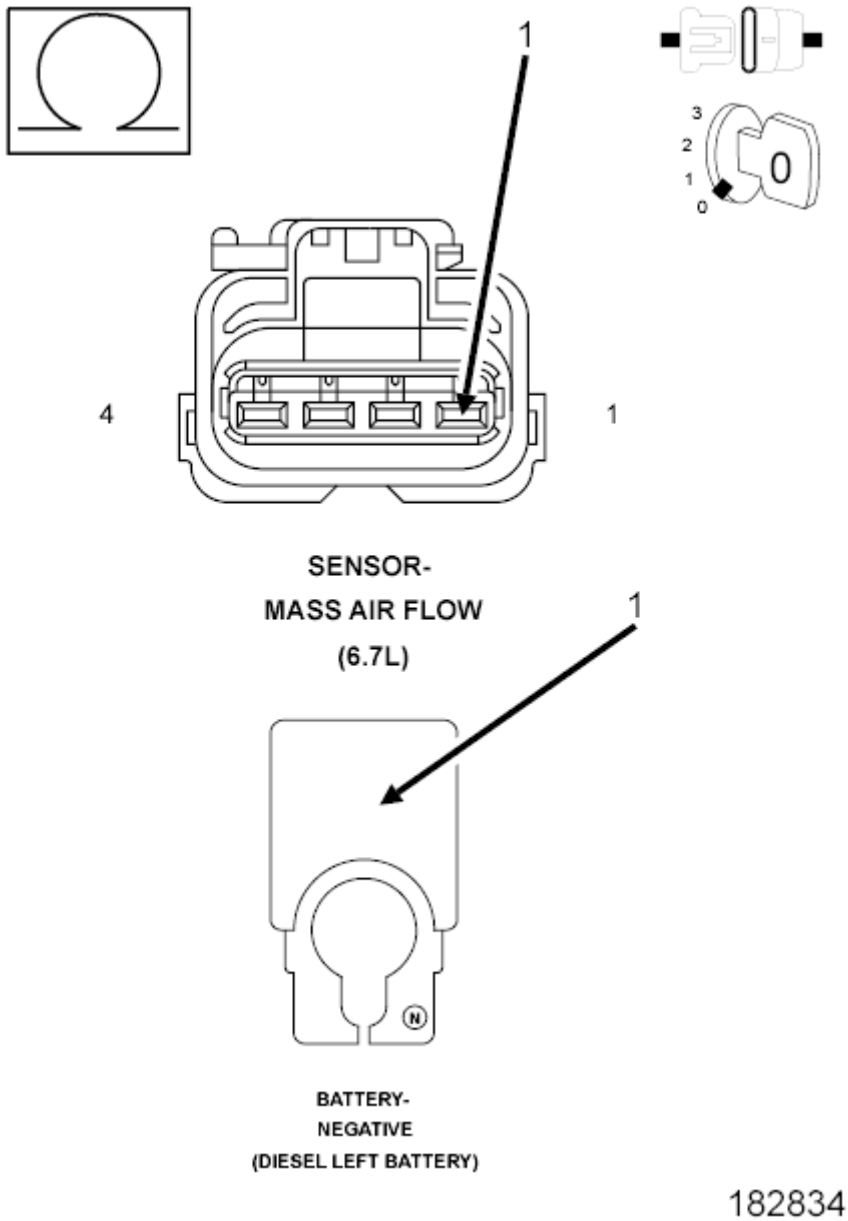

Fig. 26: Checking MAF Sensor Signal Circuit For Short To Ground
Courtesy of CHRYSLER GROUP, LLC

1. Measure the resistance between ground and the (K157) MAF Sensor Signal circuit at the Mass Air Flow Sensor harness connector.

Is the resistance below 10k Ohms?

Yes

- Repair the (K157) MAF Sensor Signal circuit for a short to ground.
- Perform the POWERTRAIN VERIFICATION TEST - 6.7L. Refer to **POWERTRAIN VERIFICATION TEST - 6.7L** .

No

- Go To 7.

7. **CHECK THE INTAKE SYSTEM**
   1. Visually inspect the Intake System for any restrictions.
   2. Perform the INTAKE AIR PRESSURE TEST diagnostic procedure. Refer to **DIAGNOSIS AND TESTING, 6.7L** .

   Were any leaks or restrictions found?

   Yes

   - Repair as necessary.
   - Perform the POWERTRAIN VERIFICATION TEST - 6.7L. Refer to **POWERTRAIN VERIFICATION TEST - 6.7L** .

   No

   - Go To 8.

8. **CHECK THE EXHAUST SYSTEM**
   1. Visually inspect the Exhaust System for any restrictions.
   2. Perform the CHECKING THE EXHAUST SYSTEM FOR LEAKS diagnostic procedure. Refer to **DIAGNOSIS AND TESTING, 6.7L** .

   Were any leaks or restrictions found?

   Yes

   - Repair as necessary.
   - Perform the POWERTRAIN VERIFICATION TEST - 6.7L. Refer to **POWERTRAIN VERIFICATION TEST - 6.7L** .

   No

   - Go To 9.

9. **CHECK THE MASS AIR FLOW SENSOR**

1. Replace the MAF Sensor in accordance with the Service Information.
2. Reconnect the PCM C1 harness connector.
3. Turn the ignition on.
4. With the scan tool, erase DTCs.
5. Start the engine and allow it to idle for one minute.
6. With the scan tool, read DTCs.

   Does the DTC P0102 return?

   Yes

   - Replace the Powertrain Control Module in accordance with the Service Information.
   - Perform the POWERTRAIN VERIFICATION TEST - 6.7L. Refer to **POWERTRAIN VERIFICATION TEST - 6.7L** .

   No

   - Test Complete.
   - Perform the POWERTRAIN VERIFICATION TEST - 6.7L. Refer to **POWERTRAIN VERIFICATION TEST - 6.7L** .

P0103-MASS AIR FLOW SENSOR "A" CIRCUIT HIGH

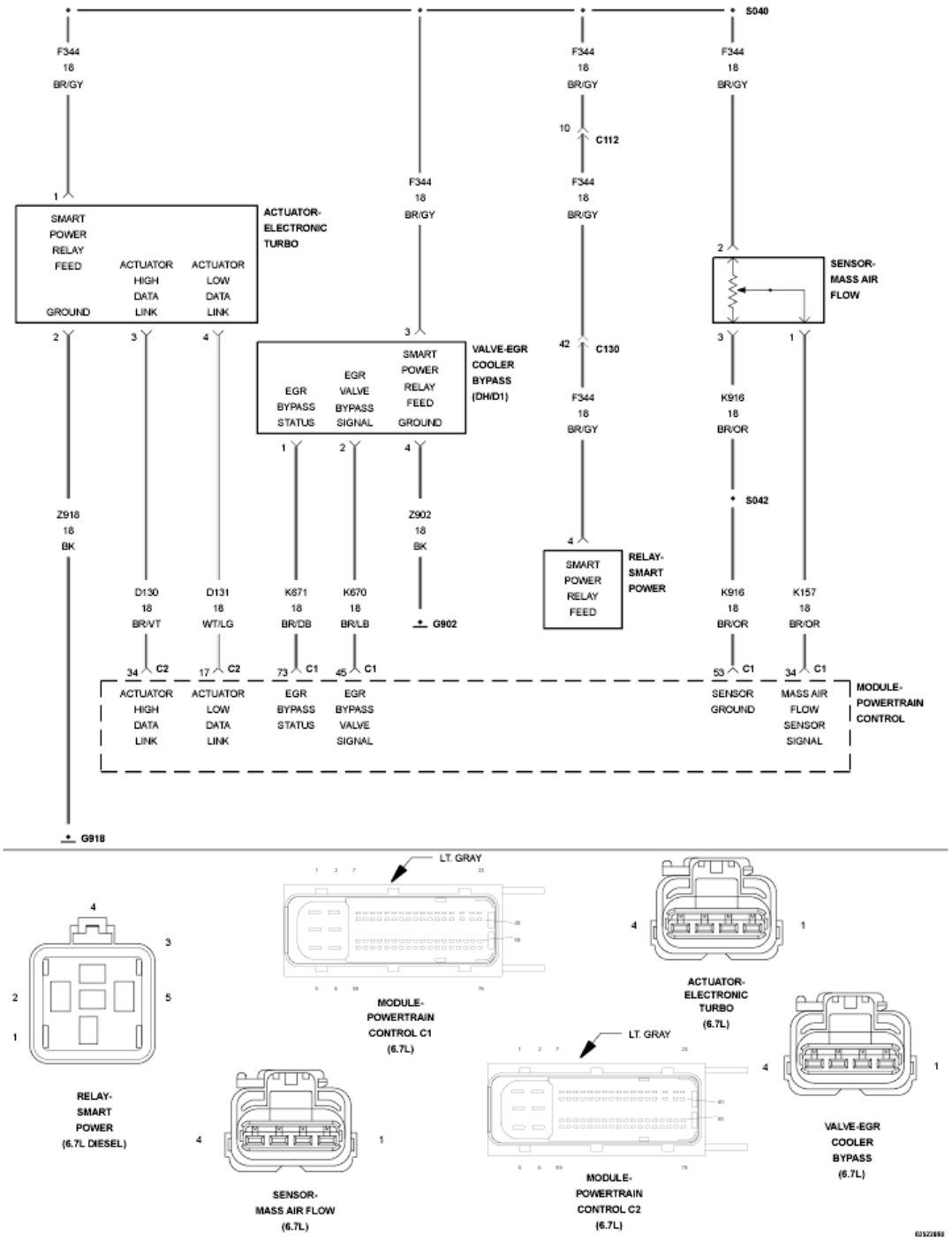

Fig. 27: Turbocharger Boost Control Circuit Schematic
Courtesy of CHRYSLER GROUP, LLC

For a complete wiring diagram, **refer to appropriate SYSTEM WIRING DIAGRAMS article** .

THEORY OF OPERATION

The Mass Air Flow (MAF) Sensor is a frequency based device. A constant voltage is applied to a heated wire. This wire is positioned in the air stream and is heated by the electrical current that the voltage produces. As air

flows across it, it cools down. The heated wire or film is a Positive Temperature Coefficient (PTC) resistor, which means that the resistance of it drops when the temperature drops. The drop in resistance allows more current to flow through it in order to maintain the programmed temperature. The current flow is changed to a frequency, which is sent to the Powertrain Control Module (PCM) and interpreted as air flow. Adjustments for air temperature and humidity are taken into consideration, since they also affect the temperature of the heated wire or film. The engine running monitor compares an estimated fresh air flow value to the Mass Air Flow Sensor reading. The PCM will light the Malfunction Indicator Lamp (MIL) immediately after this diagnostic runs and fails. The PCM will turn off the MIL when the diagnostic runs and passes in four consecutive drive cycles.

WHEN MONITORED:

When the PCM is powered on.

SET CONDITION:

The frequency detected is above what is allowable for the sensor.

POSSIBLE CAUSES

Possible Causes
(K157) MAF SENSOR SIGNAL CIRCUIT SHORTED TO VOLTAGE
(K916) MAF SENSOR RETURN CIRCUIT OPEN/HIGH RESISTANCE
MASS AIR FLOW (MAF) SENSOR
POWERTRAIN CONTROL MODULE (PCM)

Always perform the Pre-Diagnostic Troubleshooting procedure before proceeding. Refer to PRE-DIAGNOSTIC TROUBLESHOOTING PROCEDURE - 6.7L .

DIAGNOSTIC TEST

1. **ACTIVE DTC**

NOTE: The MAF Sensor, EGR Cooler Bypass Valve and Turbocharger Actuator get a 12V power supply from the Smart Power Relay.

1. Ignition on, engine not running.
2. Record freeze frame data and clear DTCs.
3. Turn the ignition off for one minute.
4. Turn the ignition on.
5. With the scan tool, read DTCs.

Did the DTC return?

Yes

- Go To 2.

No

- Perform the INTERMITTENT CONDITION - 6.7L diagnostic procedure. Refer to **INTERMITTENT CONDITION - 6.7L** .

2. **CHECK THE (K157) MAF SENSOR SIGNAL CIRCUIT SHORT TO VOLTAGE**

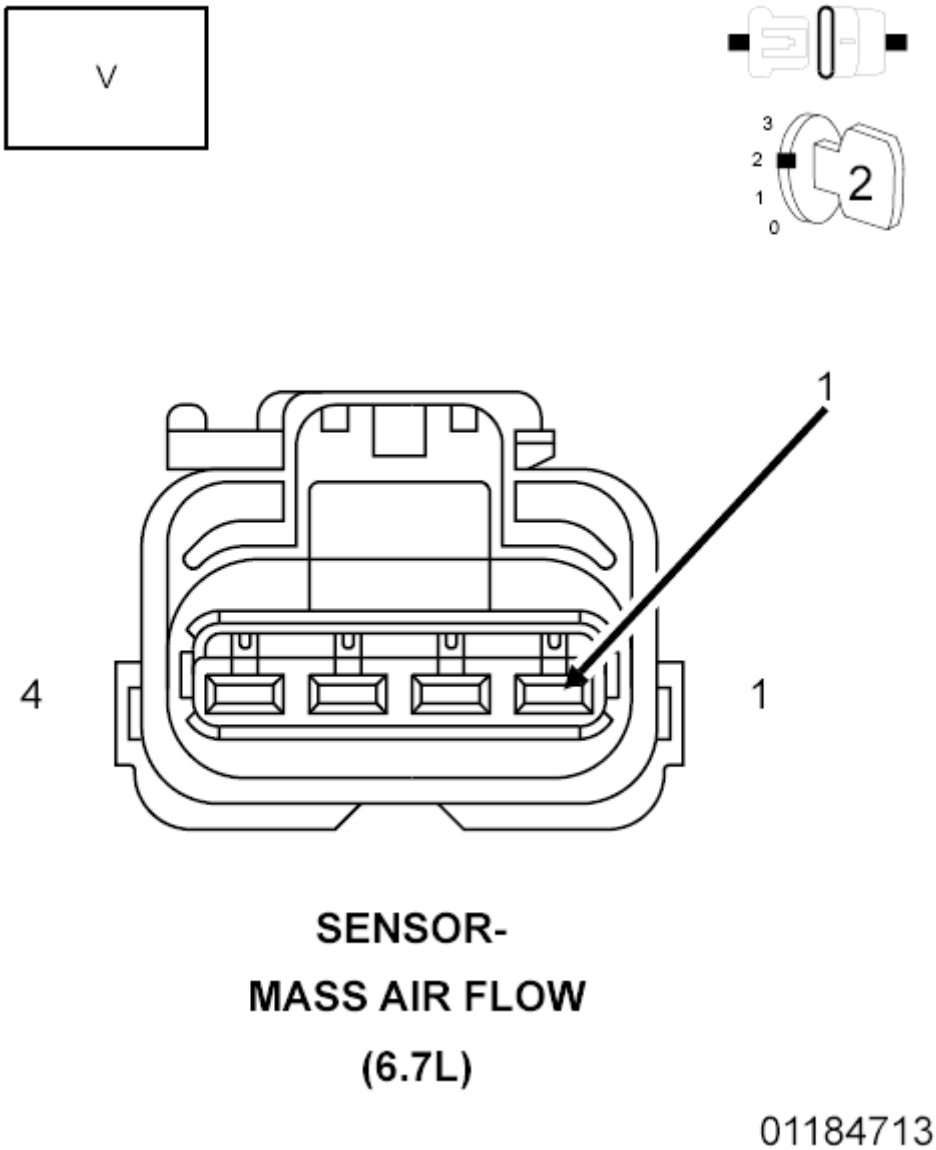

Fig. 28: Checking MAF Sensor Signal Circuit For Short To Voltage
Courtesy of CHRYSLER GROUP, LLC

1. Turn the ignition off.
2. Disconnect the MAF Sensor harness connector.
3. Turn the ignition on.

4. Measure the voltage of the (K157) MAF Sensor Signal circuit in the MAF Sensor harness connector.

   Is the voltage equal to battery voltage?

   Yes

   - Repair the short to battery in the (K157) MAF Sensor Signal circuit.
   - Perform the POWERTRAIN VERIFICATION TEST - 6.7L. Refer to **POWERTRAIN VERIFICATION TEST - 6.7L** .

   No

   - Go To 3.

3. **CHECK THE (K916) MAF SENSOR RETURN CIRCUIT FOR AN OPEN/HIGH RESISTANCE**

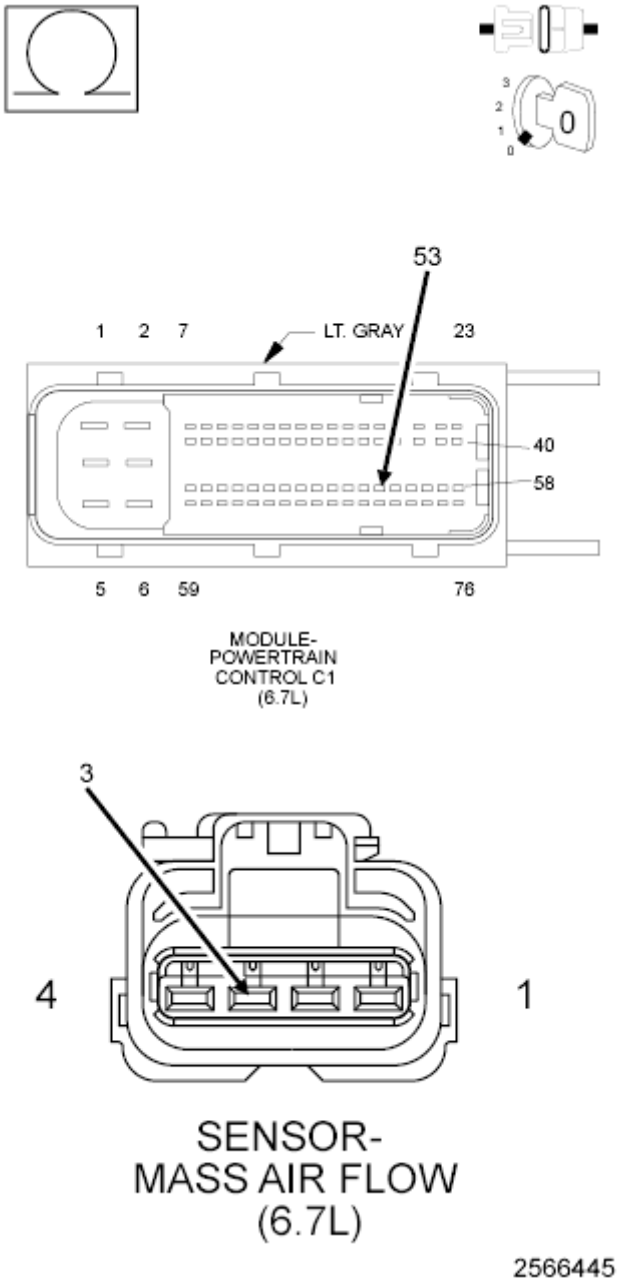

Fig. 29: Checking MAF Sensor Return Circuit For Open Or High Resistance
Courtesy of CHRYSLER GROUP, LLC

1. Turn the ignition off.
2. Disconnect the PCM C1 harness connector.
3. Measure the resistance of the (K916) MAF Sensor Return circuit between the MAF Sensor harness connector and the PCM C1 harness connector.

   Is the resistance below 5.0 Ohms?

   Yes

- Go To 4.

No

- Repair the (K916) MAF Sensor Return circuit for an open or high resistance.
- Perform the POWERTRAIN VERIFICATION TEST - 6.7L. Refer to **POWERTRAIN VERIFICATION TEST - 6.7L** .

4. **CHECK THE MASS AIR FLOW SENSOR**
   1. Turn the ignition off.
   2. Reconnect the PCM C1 harness connector.
   3. Reconnect the MAF Sensor harness connector.
   4. Turn the ignition on, engine not running.
   5. With the scan tool, clear DTCs.
   6. Disconnect the MAF Sensor harness connector and read DTCs.

   Does the scan tool display DTC P0102 as active?

   Yes

   - Replace the MAF Sensor in accordance with the Service Information.
   - Perform the POWERTRAIN VERIFICATION TEST - 6.7L. Refer to **POWERTRAIN VERIFICATION TEST - 6.7L** .

   No

   - Replace the Powertrain Control Module in accordance with the Service Information.
   - Perform the POWERTRAIN VERIFICATION TEST - 6.7L. Refer to **POWERTRAIN VERIFICATION TEST - 6.7L** .

P0106-MANIFOLD ABSOLUTE PRESSURE SENSOR PERFORMANCE

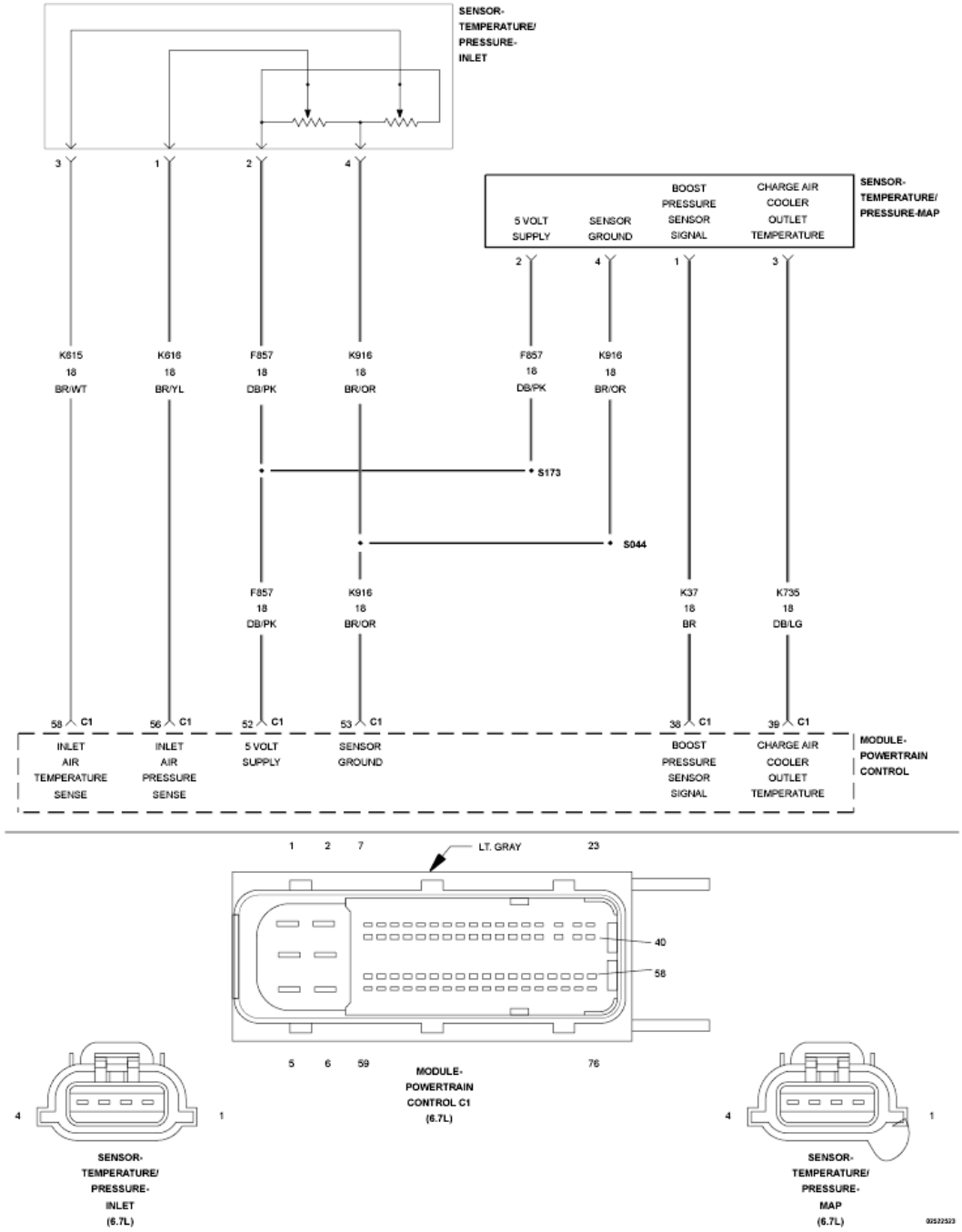

Fig. 30: Inlet Air Temperature Sensor Circuit Schematic
Courtesy of CHRYSLER GROUP, LLC

For a complete wiring diagram, **refer to appropriate SYSTEM WIRING DIAGRAMS article** .

THEORY OF OPERATION

The Charge Air Cooler Temperature Sensor (CAC) and the Boost Pressure Sensor are combined in one sensor and are located near the EGR Airflow Throttle Control Valve. The Boost Pressure Sensor is used to measure pressure in the intake manifold. The Electronic Control Module (PCM) provides a 5-Volt supply and sensor

ground for the Boost Pressure Sensor. The Boost Pressure Sensor provides a signal back to the PCM on the Boost Pressure Sensor Signal circuit. The PCM will detect a low signal voltage at operating conditions such as during an idle or a deceleration. The PCM will detect a high signal voltage during high engine load operating conditions. At key on, the readings for the Boost Pressure Sensor, Exhaust Gas Pressure Sensor, and Barometric Pressure Sensor are compared. This fault code occurs if the boost pressure reading is different from the others. During normal engine operation, the PCM estimates the Boost Pressure Sensor value using other fuel system related inputs. The PCM compares the actual Boost Pressure Sensor reading to this estimated value. If the two values are out of range for a calibrated period of time, an error is recorded. The key-on portion of the rationality will light the MIL immediately after the diagnostic runs and fails.The rationality portion will light the MIL immediately and the ETC lamp will also be illuminated. The PCM turns off the MIL when the diagnostic runs and passes in four consecutive drive cycles.

WHEN MONITORED:

Continuosly with key on or engine running.

SET CONDITION:

The boost pressure recorded at key on is not within a calibrated range of the Inlet Air Pressure Sensor or the boost pressure reading is not within a calibrated range of the of the estimated boost pressure value with engine running.

POSSIBLE CAUSES

Possible Causes
INTAKE AIR SYSTEM LEAK
EGR AIRFLOW THROTTLE CONTROL VALVE
PLUGGED AIR FILTER
BOOST PRESSURE SENSOR

Always perform the Pre-Diagnostic Troubleshooting procedure before proceeding. Refer to PRE-DIAGNOSTIC TROUBLESHOOTING PROCEDURE - 6.7L .

DIAGNOSTIC TEST

1. **ACTIVE DTC**

NOTE: **If there are any EGR Valve or EGR Airflow Control Valve DTCs present, repair those DTCs before proceeding.**

NOTE: **If customer states that there was an EVIC message "Service Air Filter", or if Freeze Frame Data shows "Air Filter Plugged Error equals ON", replace the Air Filter before continuing.**

1. Turn the ignition on.
2. With the scan tool, record all Freeze frame data.

3. With the scan tool, erase DTCs.
4. Turn the ignition on for 75 seconds.
5. Start the engine and let idle.
6. With the scan tool, read DTCs.

Did the DTC return?

Yes

- Go To 2.

No

- Perform the INTERMITTENT CONDITION - 6.7L diagnostic procedure. Refer to **INTERMITTENT CONDITION - 6.7L** .

2. **CHECK FOR AN INTAKE AIR SYSTEM LEAK**
   1. Perform the INTAKE AIR SYSTEM PRESSURE TEST. Refer to **DIAGNOSIS AND TESTING, 6.7L** .

   Where any leaks found?

   Yes

   - Repair the leak and perform a Mobile Desoot of the aftertreatment system.
   - Perform the POWERTRAIN VERIFICATION TEST - 6.7L. Refer to **POWERTRAIN VERIFICATION TEST - 6.7L** .

   No

   - Go To 3.

3. **CHECK THE EGR AIRFLOW THROTTLE CONTROL VALVE**
   1. Remove the boot from the EGR Airflow Throttle Control Valve.
   2. Using a mirror, look at the butterfly valve on the inside of the EGR Airflow Throttle Control Valve.
   3. Start the vehicle, let idle for 10 seconds.
   4. Turn the ignition off.

   NOTE: If functioning properly the EGR Airflow Throttle Control Valve will cycle closed immediately after the engine is shut down.

   Did the EGR Airflow Throttle Control Valve cycle closed immediately after the engine was shut down?

   Yes

- Go To 4.

No

- Replace the EGR Airflow Throttle Control Valve in accordance with the service information.
- Perform the POWERTRAIN VERIFICATION TEST - 6.7L. Refer to **POWERTRAIN VERIFICATION TEST - 6.7L** .

4. **BOOST PRESSURE SENSOR**
   1. Turn ignition switch on. Wait five seconds after ignition switch is turned on.
   2. Using the scan tool, read DTCs

   Is P0106 stored?

   Yes

   - Go To 5.

   No

   - Replace the Boost Pressure Sensor in accordance with the service information.
   - Perform the POWERTRAIN VERIFICATION TEST - 6.7L. Refer to **POWERTRAIN VERIFICATION TEST - 6.7L** .

5. **BOOST PRESSURE SENSOR**
   1. Erase the DTC with the scan tool.
   2. Start the engine and let it idle for one minute.
   3. With the scan tool, monitor the boost pressure reading.

   Does the Boost Pressure Sensor fluctuate slightly, indicating the sensor is not stuck?

   Yes

   - Repair complete.
   - Perform the POWERTRAIN VERIFICATION TEST - 6.7L. Refer to **POWERTRAIN VERIFICATION TEST - 6.7L** .

   No

   - Replace the Boost Pressure Sensor in accordance with the service information.
   - Perform the POWERTRAIN VERIFICATION TEST - 6.7L. Refer to **POWERTRAIN VERIFICATION TEST - 6.7L** .

P0107-MANIFOLD ABSOLUTE PRESSURE SENSOR CIRCUIT LOW

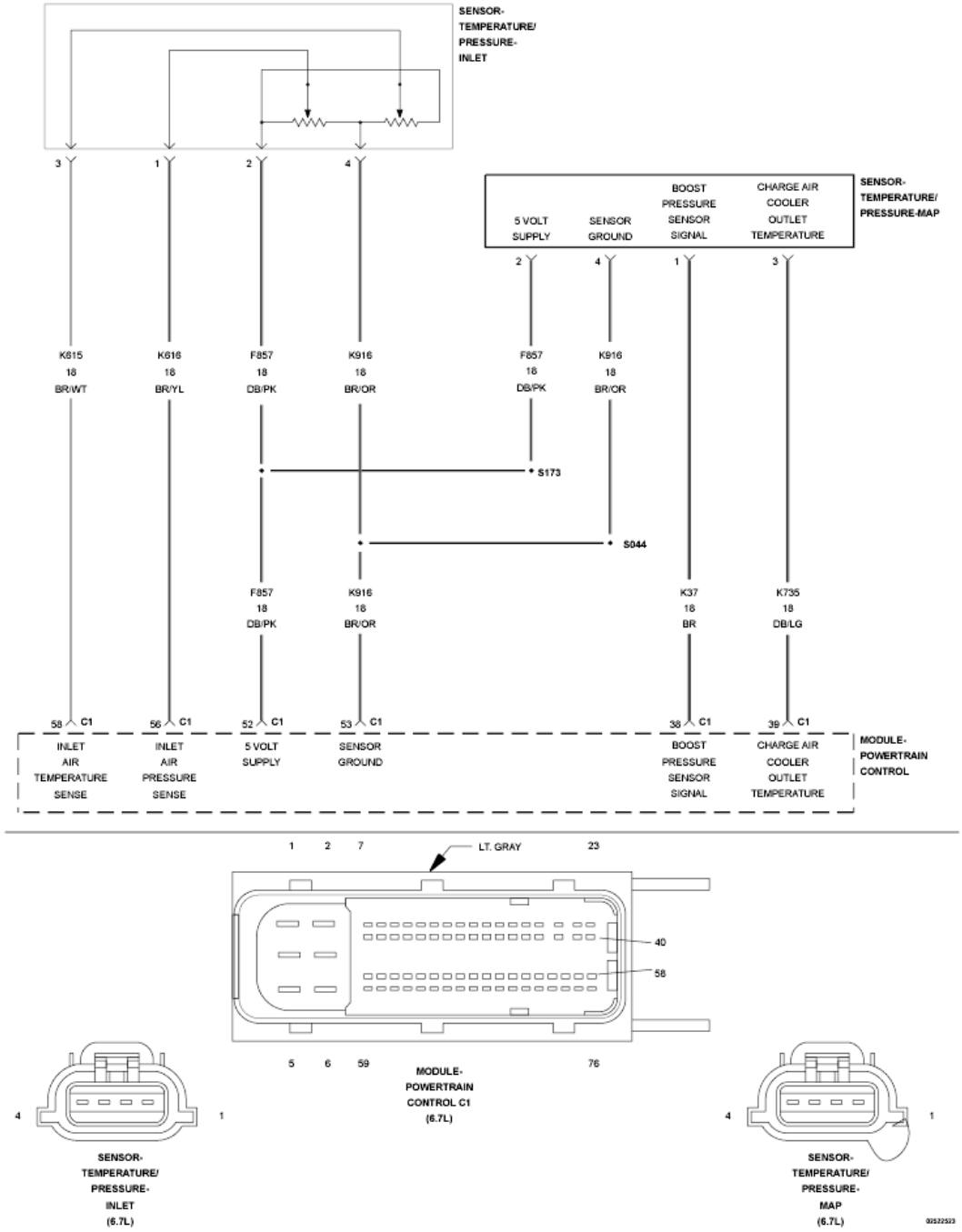

Fig. 31: Inlet Air Temperature Sensor Circuit Schematic
Courtesy of CHRYSLER GROUP, LLC

For a complete wiring diagram, **refer to appropriate SYSTEM WIRING DIAGRAMS article** .

THEORY OF OPERATION

The Charge Air Cooler Temperature Sensor (CAC) and the Boost Pressure Sensor are combined in one sensor and are located near the EGR Airflow Throttle Control Valve. The Boost Pressure Sensor is used to measure pressure in the intake manifold. The Powertrain Control Module (PCM) provides a 5-Volt supply and sensor

ground for the Boost Pressure Sensor. The Boost Pressure Sensor provides a signal back to the PCM on the Boost Pressure Sensor Signal circuit. The PCM will detect a low signal voltage at operating conditions such as during an idle or a deceleration. The PCM will detect a high signal voltage during high engine load operating conditions. At key on, the readings for the Boost Pressure Sensor, Exhaust Gas Pressure Sensor, and Barometric Pressure Sensor are compared. This fault code occurs if the boost pressure reading is different from the others. During normal engine operation, the PCM estimates the Boost Pressure Sensor value using other fuel system related inputs. The PCM compares the actual Boost Pressure Sensor reading to this estimated value. If the two values are out of range for a calibrated period of time, an error is recorded. The key-on portion of the rationality will light the MIL immediately after the diagnostic runs and fails. The rationality portion will light the MIL immediately and the ETC lamp will also be illuminated. The PCM turns off the MIL when the diagnostic runs and passes in four consecutive drive cycles.

WHEN MONITORED:

With the ignition on and battery voltage greater than 10.4 Volts.

SET CONDITION:

The (K37) Boost Pressure Sensor Signal circuit drops below 0.25 Volts for five seconds.

POSSIBLE CAUSES

Possible Causes
(F857) 5-VOLT SUPPLY CIRCUIT OPEN/HIGH RESISTANCE
(K37) BOOST PRESSURE SENSOR SIGNAL CIRCUIT SHORTED TO THE (K916) BOOST PRESSURE SENSOR RETURN CIRCUIT
(K37) BOOST PRESSURE SENSOR SIGNAL CIRCUIT SHORTED TO GROUND
(K37) BOOST PRESSURE SENSOR SIGNAL CIRCUIT OPEN/HIGH RESISTANCE
BOOST PRESSURE SENSOR
POWERTRAIN CONTROL MODULE (PCM)

Always perform the Pre-Diagnostic Troubleshooting procedure before proceeding. Refer to PRE-DIAGNOSTIC TROUBLESHOOTING PROCEDURE - 6.7L .

DIAGNOSTIC TEST

1. **ACTIVE DTC**

NOTE: **If there are any 5-Volt supply DTCs present, repair those DTCs before proceeding.**

1. Turn the ignition on.
2. With the scan tool, record all Freeze frame data.
3. With the scan tool, erase DTCs.
4. Turn the ignition off for 75 seconds.

5. Turn the ignition on.
6. With the scan tool, read DTCs.

   Did the DTC reset?

   Yes

   - Go To 2.

   No

   - Perform the INTERMITTENT CONDITION - 6.7L diagnostic procedure. Refer to **INTERMITTENT CONDITION - 6.7L** .

2. **CHECK THE (F857) 5-VOLT SUPPLY CIRCUIT FOR AN OPEN/HIGH RESISTANCE**

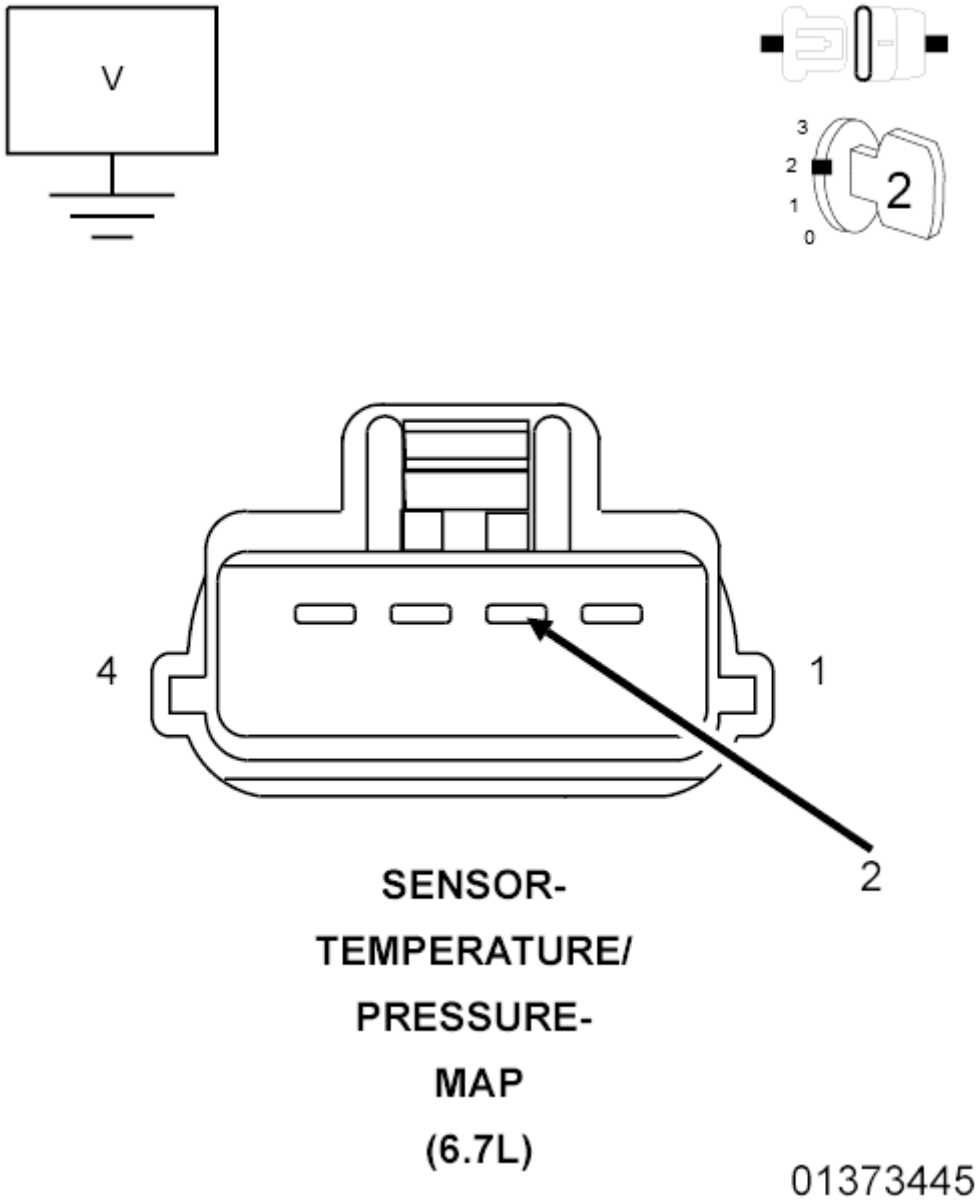

Fig. 32: Checking 5-Volt Supply Circuit For Open Or High Resistance
Courtesy of CHRYSLER GROUP, LLC

1. Ignition on.
2. Disconnect the Boost Pressure Sensor harness connector.
3. With a voltmeter, measure the voltage of the (F857) 5-Volt Supply circuit at the Boost Pressure Sensor harness connector.

   Is the voltage reading between 4.9 and 5.1 volts?

   Yes

- Go To 3.

No

- Repair the (F857) 5-Volt Supply circuit for an open or high resistance.
- Perform the POWERTRAIN VERIFICATION TEST - 6.7L. Refer to **POWERTRAIN VERIFICATION TEST - 6.7L** .

3. **CHECK THE BOOST PRESSURE SENSOR**

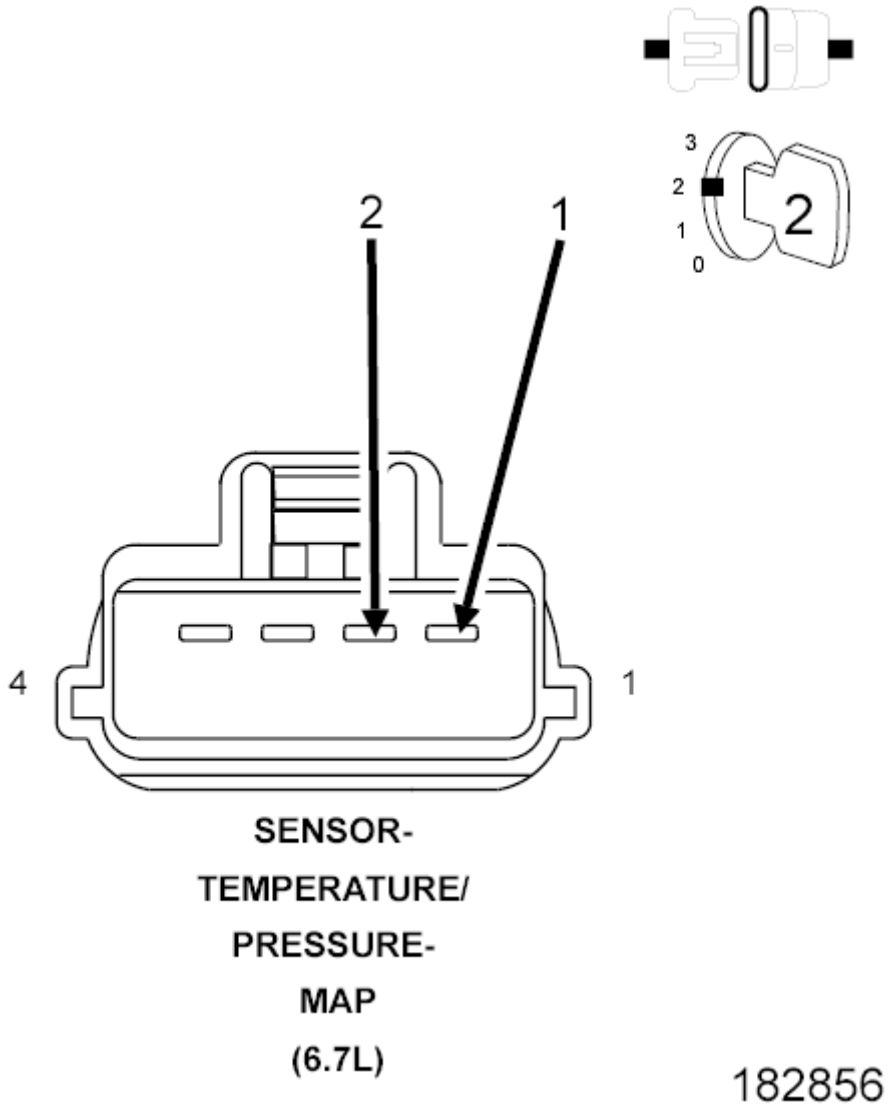

Fig. 33: MAP Pressure Sensor Harness Connector
Courtesy of CHRYSLER GROUP, LLC

1. While monitoring the scan tool, connect a jumper between the (F855) 5-Volt Supply circuit and the (K37) Boost Pressure Sensor Signal circuit at the Boost Pressure Sensor harness connector.

Did the P0108 DTC set?

Yes

- Replace the Boost Pressure Sensor in accordance with the service information.
- Perform the POWERTRAIN VERIFICATION TEST - 6.7L. Refer to **POWERTRAIN VERIFICATION TEST - 6.7L** .

No

- Go To 4.

4. **CHECK FOR THE (K37) BOOST PRESSURE SENSOR SIGNAL CIRCUIT SHORTED TO THE (K916) BOOST PRESSURE SENSOR RETURN CIRCUIT**

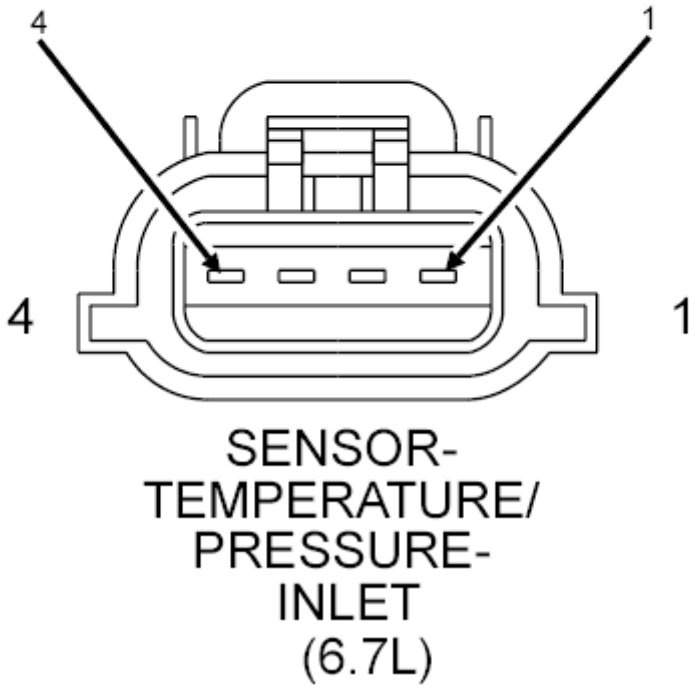

Fig. 34: Checking For Boost Pressure Sensor Signal Circuit Shorted To Boost Pressure Sensor Return Circuit
Courtesy of CHRYSLER GROUP, LLC

1. Turn the ignition off.
2. Disconnect the PCM C1 harness connector.
3. Measure the resistance between the (K37) Boost Pressure Sensor Signal circuit and (K916) Boost Pressure Sensor Return circuit at the Boost Pressure Sensor harness connector.

   Is the resistance below 10k Ohms?

   Yes

- Repair the short between the (K37) Boost Pressure Sensor Signal circuit and (K916) Boost Pressure Sensor Return circuit.
- Perform the POWERTRAIN VERIFICATION TEST - 6.7L. Refer to **POWERTRAIN VERIFICATION TEST - 6.7L** .

No

- Go To 5.

5. **CHECK THE (K37) BOOST PRESSURE SENSOR SIGNAL CIRCUIT FOR A SHORT TO GROUND**

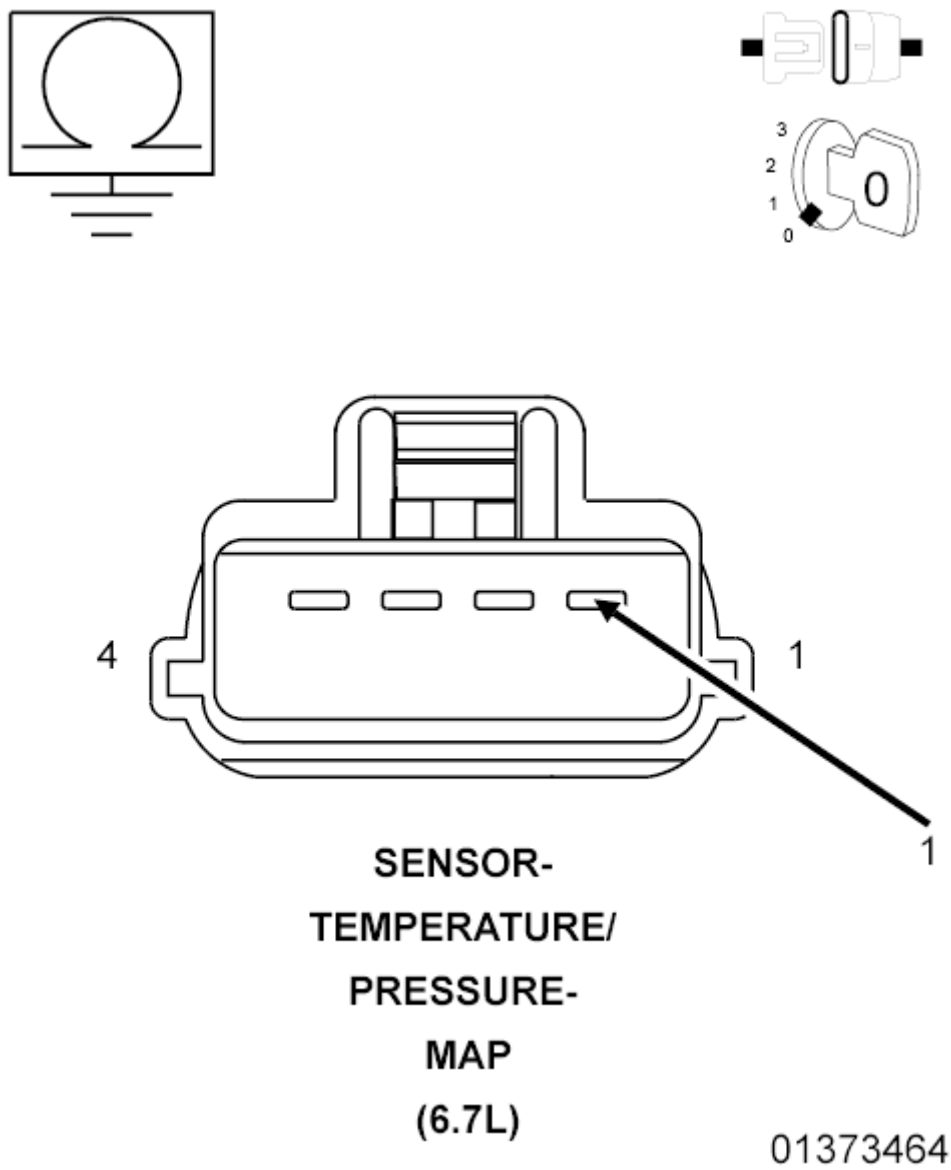

Fig. 35: Checking Boost Pressure Sensor Signal Circuit For Short To Ground
Courtesy of CHRYSLER GROUP, LLC

1. Measure the resistance between ground and the (K37) Boost Pressure Sensor Signal circuit.

   Is the resistance below 10k Ohms?

   Yes

   - Repair the (K37) Boost Pressure Sensor Signal circuit for a short to ground.
   - Perform the POWERTRAIN VERIFICATION TEST - 6.7L. Refer to **POWERTRAIN VERIFICATION TEST - 6.7L** .

   No

   - Go To 6.

6. **CHECK THE (K37) BOOST PRESSURE SENSOR SIGNAL CIRCUIT FOR AN OPEN/HIGH RESISTANCE**

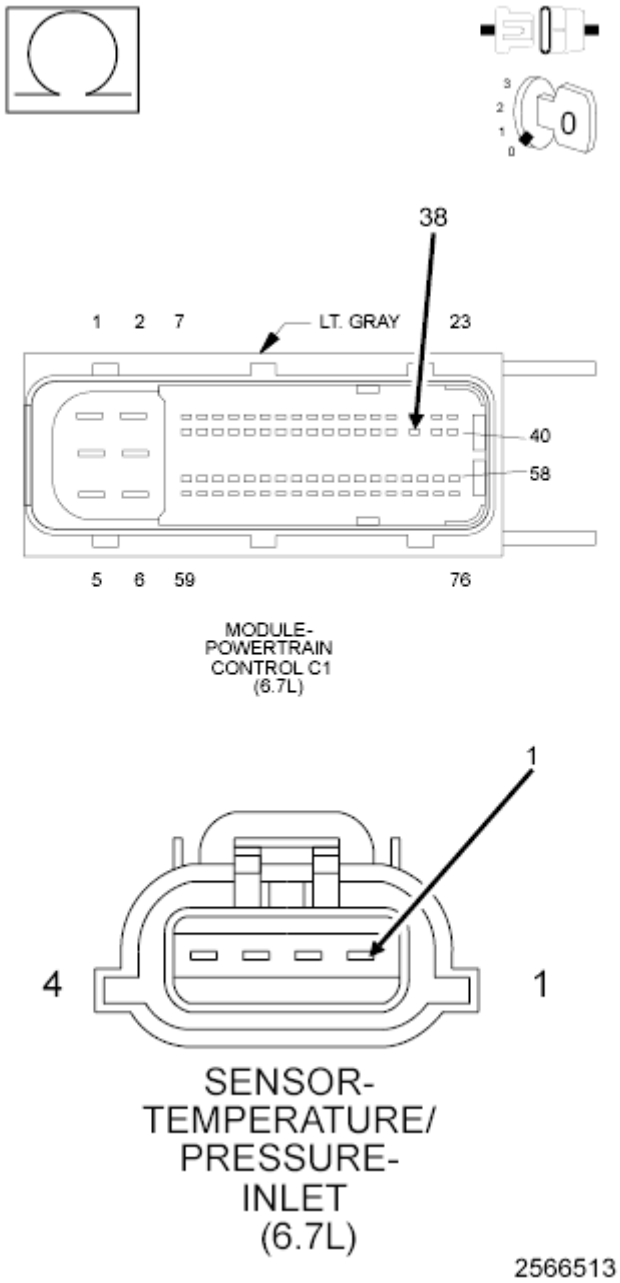

Fig. 36: Checking Boost Pressure Sensor Signal Circuit For An Open Or High Resistance
Courtesy of CHRYSLER GROUP, LLC

1. Measure the resistance of the (K37) Boost Pressure Sensor Signal circuit between the Boost Pressure Sensor and the PCM C1 harness connectors.

   Is the resistance below 5.0 Ohms?

   Yes

   - Replace the Powertrain Control Module in accordance with the service information.

- Perform the POWERTRAIN VERIFICATION TEST - 6.7L. Refer to **POWERTRAIN VERIFICATION TEST - 6.7L** .

No

- Repair the (K37) Boost Pressure Sensor Signal circuit for an open or high resistance.
- Perform the POWERTRAIN VERIFICATION TEST - 6.7L. Refer to **POWERTRAIN VERIFICATION TEST - 6.7L** .

P0108-MANIFOLD ABSOLUTE PRESSURE SENSOR CIRCUIT HIGH

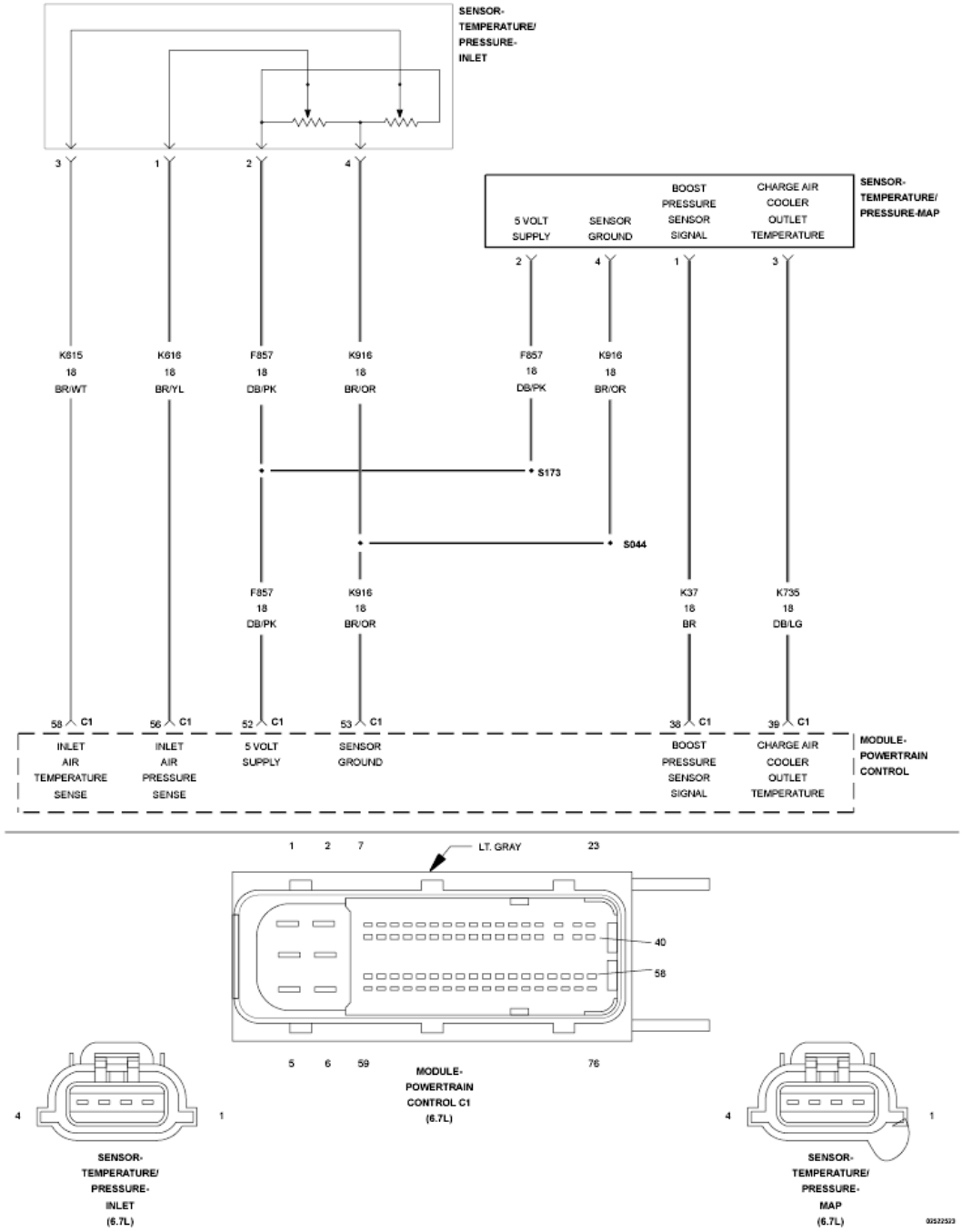

Fig. 37: Inlet Air Temperature Sensor Circuit Schematic
Courtesy of CHRYSLER GROUP, LLC

For a complete wiring diagram, **refer to appropriate SYSTEM WIRING DIAGRAMS article** .

THEORY OF OPERATION

The Charge Air Cooler Temperature Sensor (CAC) and the Boost Pressure Sensor are combined in one sensor and are located near the EGR Airflow Throttle Control Valve. The Boost Pressure Sensor is used to measure pressure in the intake manifold. The Powertrain Control Module (PCM) provides a 5-Volt supply and sensor

ground for the Boost Pressure Sensor. The Boost Pressure Sensor provides a signal back to the PCM on the Boost Pressure Sensor Signal circuit. The PCM will detect a low signal voltage at operating conditions such as during an idle or a deceleration. The PCM will detect a high signal voltage during high engine load operating conditions. The PCM performs a key on check and a rationality check. At key ON, the readings for the boost pressure, exhaust gas pressure, and barometric pressure are compared. This fault code occurs if the boost pressure reading is different from the other two. This diagnostic is run five seconds after key on. During normal engine operation, the PCM estimates the Boost Pressure Sensor value using other fuel system related inputs. The PCM compares the actual Boost Pressure Sensor reading to this estimated value. If the two values are out of range for a calibrated period of time, an error is recorded. The key-on portion of the rationality will light the MIL immediately after the diagnostic runs and fails. The rationality portion will light the MIL immediately and the ETC lamp will also be illuminated. During this time the PCM uses an estimated boost pressure reading. The PCM turns off the MIL when the diagnostic runs and passes in four consecutive drive cycles.

WHEN MONITORED:

With the ignition on and battery voltage greater than 10.4 Volts.

SET CONDITION:

The (K37) Boost Pressure Sensor Signal circuit is above 4.75 Volts for five seconds.

POSSIBLE CAUSES

Possible Causes
(F857) 5-VOLT SUPPLY CIRCUIT SHORTED TO VOLTAGE
(K37) BOOST PRESSURE SENSOR SIGNAL CIRCUIT SHORTED TO VOLTAGE
(K37) BOOST PRESSURE SENSOR SIGNAL CIRCUIT SHORTED TO THE (F855) 5-VOLT SUPPLY CIRCUIT
(K916) BOOST PRESSURE SENSOR RETURN CIRCUIT OPEN/HIGH RESISTANCE
BOOST PRESSURE SENSOR
POWERTRAIN CONTROL MODULE (PCM)

Always perform the Pre-Diagnostic Troubleshooting procedure before proceeding. Refer to PRE-DIAGNOSTIC TROUBLESHOOTING PROCEDURE - 6.7L .

DIAGNOSTIC TEST

1. **ACTIVE DTC**

NOTE: **If there are any 5-Volt supply DTCs present, repair those DTCs before proceeding.**

1. Turn the ignition on.
2. With the scan tool, record all Freeze frame data.
3. With the scan tool, erase DTCs.
4. Turn the ignition off for 75 seconds.

5. Turn the ignition on.
6. With the scan tool, read DTCs.

   Did the DTC reset?

   Yes

   - Go To 2.

   No

   - Perform the INTERMITTENT CONDITION - 6.7L diagnostic procedure. Refer to **INTERMITTENT CONDITION - 6.7L** .

2. **CHECK THE (K37) BOOST PRESSURE SENSOR SIGNAL CIRCUIT FOR A SHORT TO VOLTAGE**

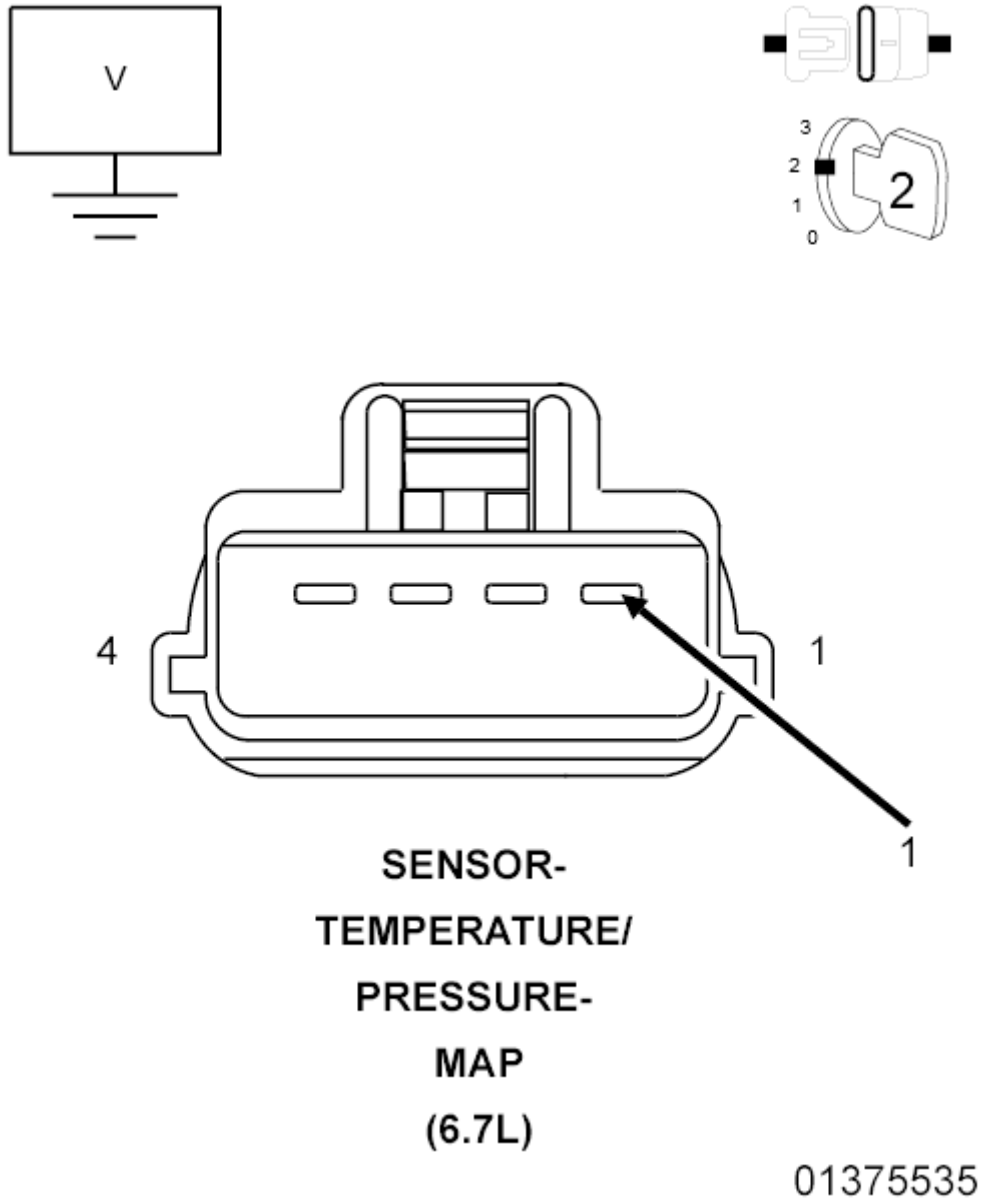

Fig. 38: Checking Boost Pressure Sensor Signal Circuit For Short To Battery
Courtesy of CHRYSLER GROUP, LLC

1. Turn the ignition off.
2. Disconnect the Boost Pressure Sensor harness connector.
3. Turn the ignition on.
4. With a voltmeter, measure the voltage of the (K37) Boost Pressure Sensor Signal circuit at the Boost Pressure Sensor harness connector.

   Is the voltage reading near battery voltage?

   Yes

- Repair the (K37) Boost Pressure Sensor Signal circuit for a short to voltage.
- Perform the POWERTRAIN VERIFICATION TEST - 6.7L. Refer to **POWERTRAIN VERIFICATION TEST - 6.7L** .

No

- Go To 3.

3. **CHECK FOR THE (K37) BOOST PRESSURE SENSOR SIGNAL CIRCUIT SHORTED TO THE (F857) 5-VOLT SUPPLY CIRCUIT**

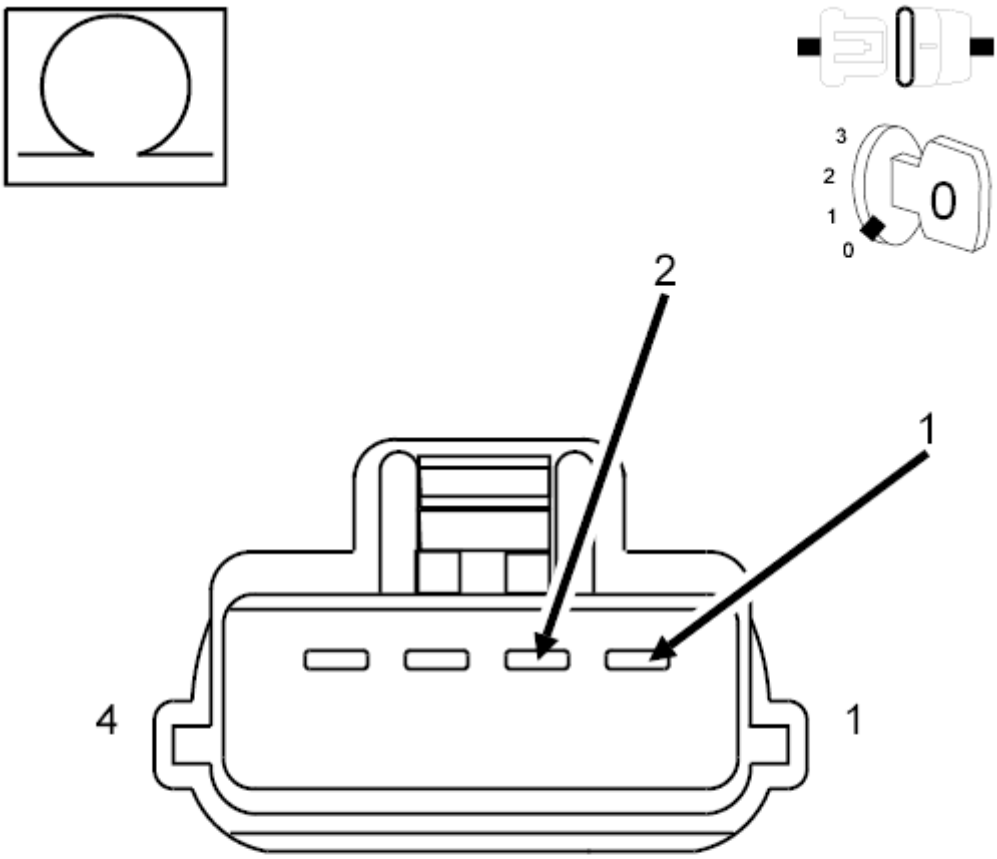

SENSOR-

TEMPERATURE/

PRESSURE-

MAP

(6.7L)

01375567

Fig. 39: Checking Boost Pressure Sensor Signal Circuit Shorted To 5-Volt Supply Circuit
Courtesy of CHRYSLER GROUP, LLC

1. Turn the ignition off.
2. Disconnect the PCM C1 harness connector.
3. Measure the resistance between the (K37) Boost Pressure Sensor Signal circuit and (F857) 5-Volt Supply circuit at the Boost Pressure Sensor harness connector.

   Is the resistance below 10k Ohms?

   Yes

   - Repair the short between the (K37) Boost Pressure Sensor Signal circuit and (F857) 5-Volt Supply circuit.
   - Perform the POWERTRAIN VERIFICATION TEST - 6.7L. Refer to **POWERTRAIN VERIFICATION TEST - 6.7L** .

   No

   - Go To 4.

4. **CHECK THE (K916) BOOST PRESSURE SENSOR RETURN CIRCUIT FOR AN OPEN/HIGH RESISTANCE**

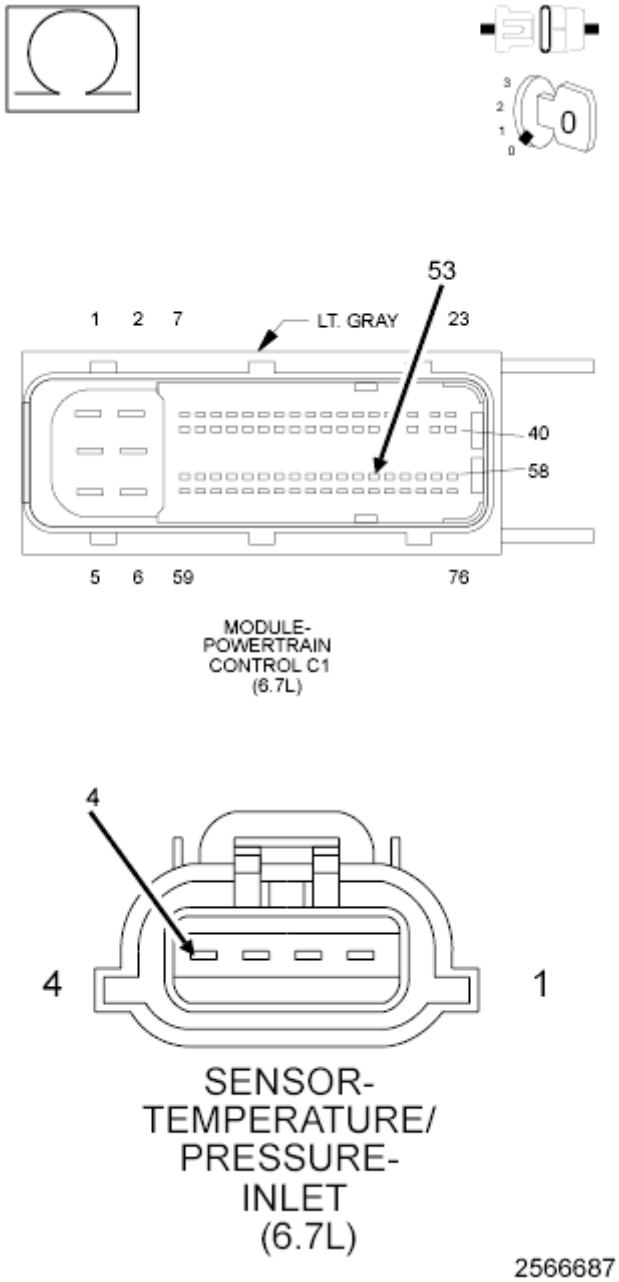

Fig. 40: Checking CAC Temperature Sensor Ground Circuit For An Open Or High Resistance
Courtesy of CHRYSLER GROUP, LLC

1. Measure the resistance of the (K916) Boost Pressure Sensor Return circuit between the Boost Pressure Sensor and the PCM C1 harness connectors.

   Is the resistance below 5.0 Ohms?

   Yes

   - Go To 4.

No

- Repair the (K916) Boost Pressure Sensor Return circuit for an open or high resistance.
- Perform the POWERTRAIN VERIFICATION TEST - 6.7L. Refer to **POWERTRAIN VERIFICATION TEST - 6.7L** .

5. **CHECK THE BOOST PRESSURE SENSOR**
    1. Reconnect the Boost Pressure Sensor harness connector.
    2. Reconnect the PCM C1 harness connector.
    3. Turn the ignition on.
    4. With the scan tool, erase DTCs.
    5. Turn the ignition off and disconnect the Boost Pressure Sensor harness connector.
    6. Turn the ignition on.
    7. With the scan tool, read DTCs.

    Did the DTC P0107 set?

    Yes

    - Replace the Boost Pressure Sensor in accordance with the service information.
    - Perform the POWERTRAIN VERIFICATION TEST - 6.7L. Refer to **POWERTRAIN VERIFICATION TEST - 6.7L** .

    No

    - Replace the Powertrain Control Module in accordance with the service information.
    - Perform the POWERTRAIN VERIFICATION TEST - 6.7L. Refer to **POWERTRAIN VERIFICATION TEST - 6.7L** .

P0111-INTAKE AIR TEMPERATURE SENSOR 1 PERFORMANCE

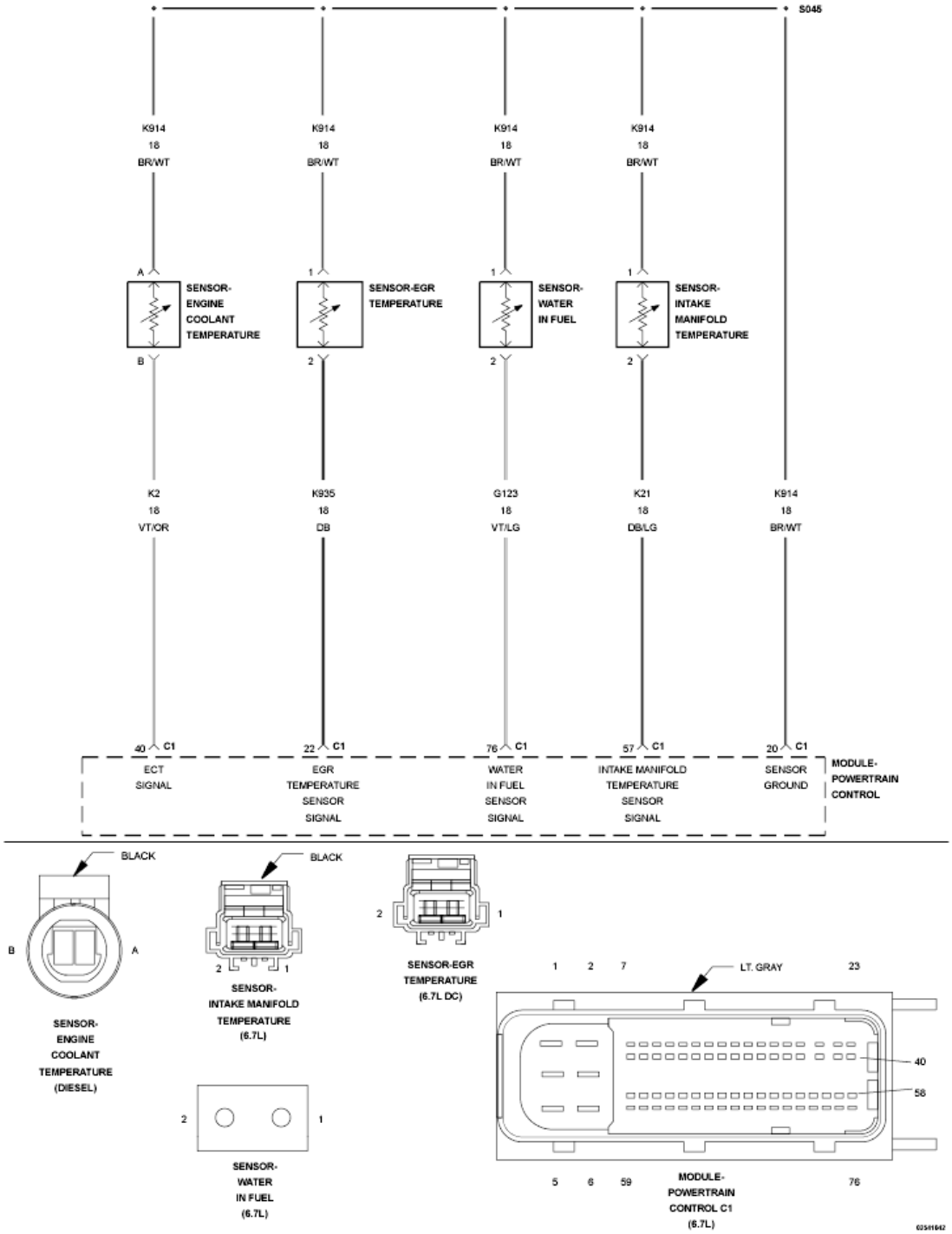

Fig. 41: Intake Manifold Temp, Engine Coolant Temp, EGR Temp, & Water In Fuel Sensor Circuit Schematic
Courtesy of CHRYSLER GROUP, LLC

For a complete wiring diagram, **refer to appropriate SYSTEM WIRING DIAGRAMS article** .

THEORY OF OPERATION

The Intake Manifold Temperature Sensor is located on the intake manifold and is used to measure the temperature of the air in the intake manifold of the engine. The Powertrain Control Module (PCM) supplies 5 Volts to the Intake Manifold Temperature Sensor. The PCM monitors the change in voltage caused by changes in the resistance of the sensor to determine the intake manifold temperature. The MIL lamp is illuminated immediately when the diagnostic runs and fails. During this time the customer may notice periods of white smoke as well as the fan running more often. The MIL lamp is turned off once the diagnostic runs and passes in four consecutive drive cycles.

WHEN MONITORED:

Key on engine off and while engine is running.

SET CONDITION:

At key on engine off, the Intake Air Temperature Sensor reads differently than the Engine Coolant Temperature Sensor and EGR Orifice Temperature Sensor, or while the engine is running the PCM does not read a change in value from the Intake Air Temperature Sensor over time.

POSSIBLE CAUSES

Possible Causes
AIR CLEANER BOX NOT SEALING PROPERLY TO THE AIR INLET TUBE
DIRT OR DEBRIS IN CHARGE AIR COOLING SYSTEM
INTAKE AIR TEMPERATURE SENSOR

Always perform the Pre-Diagnostic Troubleshooting procedure before proceeding. Refer to PRE-DIAGNOSTIC TROUBLESHOOTING PROCEDURE - 6.7L .

DIAGNOSTIC TEST

1. **CHECK THE AIR CLEANER BOX FOR PROPER SEALING**
    1. Check the connection between the Inlet Air Tube and the Air Cleaner Box to make sure that it is sealed properly.

       Is the Air Cleaner Box to Inlet Air Tube installed and sealed properly?

       Yes

       - Go To 2.

       No

       - Repair the connection between the Air Cleaner Box and the Inlet Air Tube.
       - Perform the POWERTRAIN VERIFICATION TEST - 6.7L. Refer to **POWERTRAIN VERIFICATION TEST - 6.7L** .
2. **CHECK THE CHARGE AIR COOLER AND SYSTEM FOR DIRT OR DEBRIS**

1. Remove the hoses at the Charge Air Cooler and Turbo outlet and inspect the system for signs of excessive oil, dirt or debris.

   Does the Charge Air Cooling system show signs of excessive dirt or debris?

   Yes

   - Clean the Charge Air Cooling system in accordance with the service information.
   - Perform the POWERTRAIN VERIFICATION TEST - 6.7L. Refer to **POWERTRAIN VERIFICATION TEST - 6.7L** .

   No

   - Go To 3.

3. **CHECK THE INTAKE AIR TEMPERATURE SENSOR**
   1. Disconnect the Intake Air Temperature Sensor harness connector.
   2. Remove the Intake Air Temperature Sensor and reconnect the wiring harness connector to the sensor.
   3. With the scan tool in Sensors, Monitor the Intake Air Temperature Sensor.
   4. While heating the sensor with an external heat source (DO NOT USE OPEN FLAME).

      Does the reading from the sensor increase at least (5°F) on the scan tool?

      Yes

      - Go To 4.

      No

      - Replace the Intake Air Temperature Sensor in accordance with the service information.
      - Perform the POWERTRAIN VERIFICATION TEST - 6.7L. Refer to **POWERTRAIN VERIFICATION TEST - 6.7L** .

4. **COMPARE THE INTAKE AIR TEMPERATURE SENSOR**
   1. After an eight hour cold soak, connect the scan tool and monitor intake air temperature, EGR orifice temperature, and engine coolant temperature.

      NOTE: Make sure ambient air temperature is above -6.7°C (20°F) when performing this test.

      NOTE: Make sure there is no external heat source, such as a block heater, operating during this test or within the eight hour cold soak.

      Does the Intake Air Temperature Sensor read differently from the other sensors?

Yes

- Replace the Intake Air Temperature Sensor in accordance with the service information.
- Perform the POWERTRAIN VERIFICATION TEST - 6.7L. Refer to **POWERTRAIN VERIFICATION TEST - 6.7L** .

No

- Perform the INTERMITTENT CONDITION - 6.7L diagnostic procedure. Refer to **INTERMITTENT CONDITION - 6.7L** .

P0112-INTAKE AIR TEMPERATURE SENSOR 1 CIRCUIT LOW

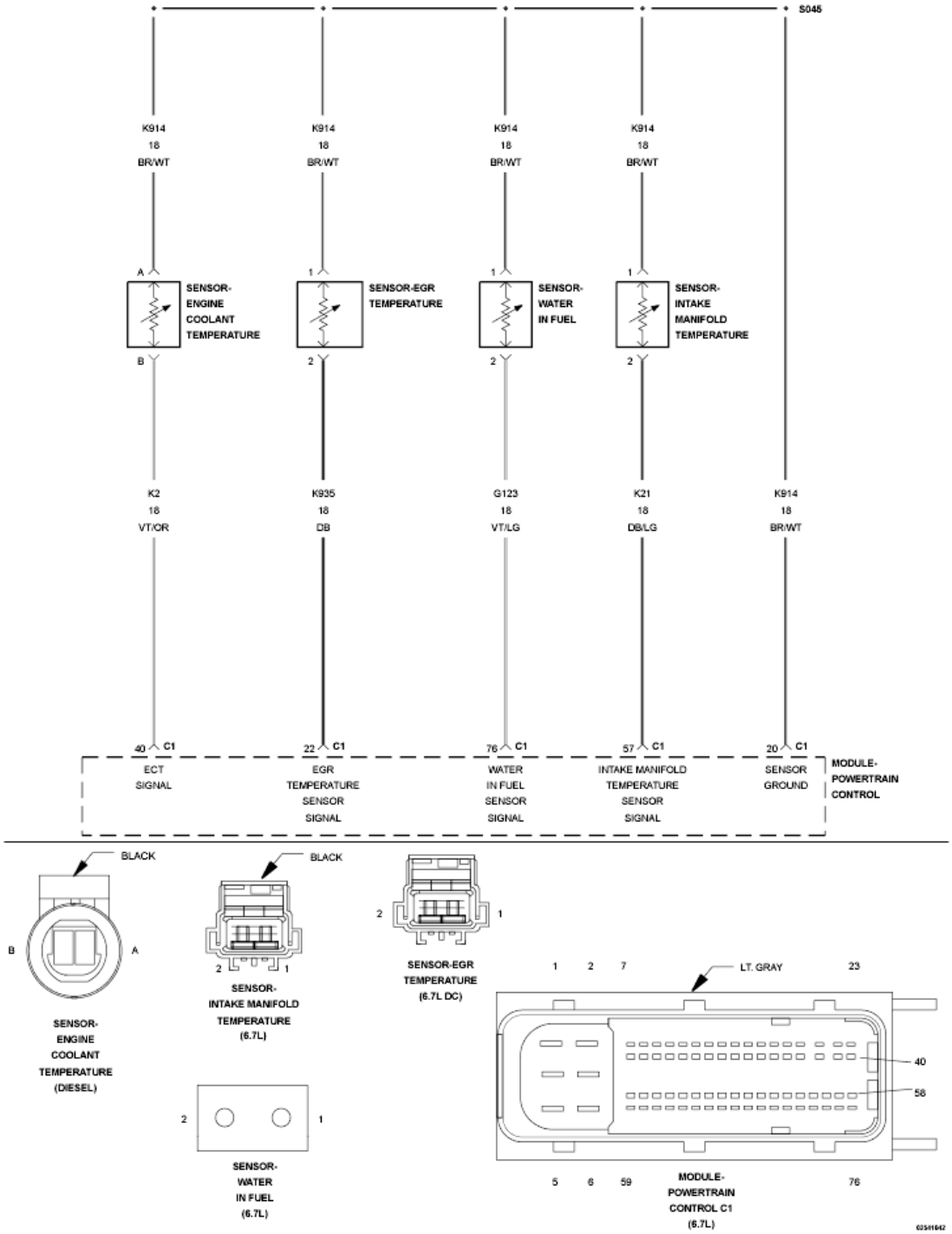

Fig. 42: Intake Manifold Temp, Engine Coolant Temp, EGR Temp, & Water In Fuel Sensor Circuit Schematic
Courtesy of CHRYSLER GROUP, LLC

For a complete wiring diagram, **refer to appropriate SYSTEM WIRING DIAGRAMS article** .

THEORY OF OPERATION

The Intake Manifold Temperature Sensor is located on the intake manifold and is used to measure the temperature of the air in the intake manifold of the engine. The Powertrain Control Module (PCM) supplies 5 volts to the intake manifold temperature signal circuit. The PCM monitors the change in voltage caused by changes in the resistance of the sensor to determine the intake manifold temperature. The MIL lamp is illuminated immediately when the diagnostic runs and fails. During this time the customer may notice periods of white smoke as well as the fan running more often. The MIL lamp is turned off once the diagnostic runs and passes in four consecutive drive cycles.

WHEN MONITORED:

The PCM monitors the change in signal voltage and converts this to a temperature value.

SET CONDITION:

The (K21) Intake Manifold Temperature Sensor Signal circuit drops below 0.25 of a Volt for five seconds.

POSSIBLE CAUSES

Possible Causes
(K21) INTAKE MANIFOLD TEMPERATURE SENSOR SIGNAL CIRCUIT SHORTED TO GROUND
(K21) INTAKE MANIFOLD TEMPERATURE SENSOR SIGNAL CIRCUIT SHORTED TO (K914) SENSOR GROUND CIRCUIT
INTAKE AIR TEMPERATURE SENSOR
POWERTRAIN CONTROL MODULE

Always perform the Pre-Diagnostic Troubleshooting procedure before proceeding. Refer to PRE-DIAGNOSTIC TROUBLESHOOTING PROCEDURE - 6.7L .

DIAGNOSTIC TEST

1. **ACTIVE DTC**
    1. Turn the ignition on.
    2. With the scan tool, record all Freeze frame data.
    3. With the scan tool, erase DTCs.
    4. Turn the ignition off for 75 seconds.
    5. Turn the ignition on.
    6. With the scan tool, read DTCs.

    Did the DTC reset?

    Yes

    - Go To 2.

No

- Perform the INTERMITTENT CONDITION - 6.7L diagnostic procedure. Refer to **INTERMITTENT CONDITION - 6.7L** .

2. **CHECK THE INTAKE MANIFOLD TEMPERATURE SENSOR**
   1. Turn the ignition off.
   2. Disconnect the Intake Manifold Temperature Sensor harness connector.

      NOTE: Check connectors - Clean/repair as necessary.

   3. Measure the resistance across the Intake Manifold Temperature Sensor.

      Is the resistance between 300 and 90k Ohms?

      Yes

      - Go To 3.

      No

      - Replace the Intake Manifold Temperature Sensor in accordance with the service information.
      - Perform the POWERTRAIN VERIFICATION TEST - 6.7L. Refer to **POWERTRAIN VERIFICATION TEST - 6.7L** .

3. **CHECK THE (K21) INTAKE MANIFOLD TEMPERATURE SENSOR SIGNAL CIRCUIT FOR A SHORT TO GROUND**

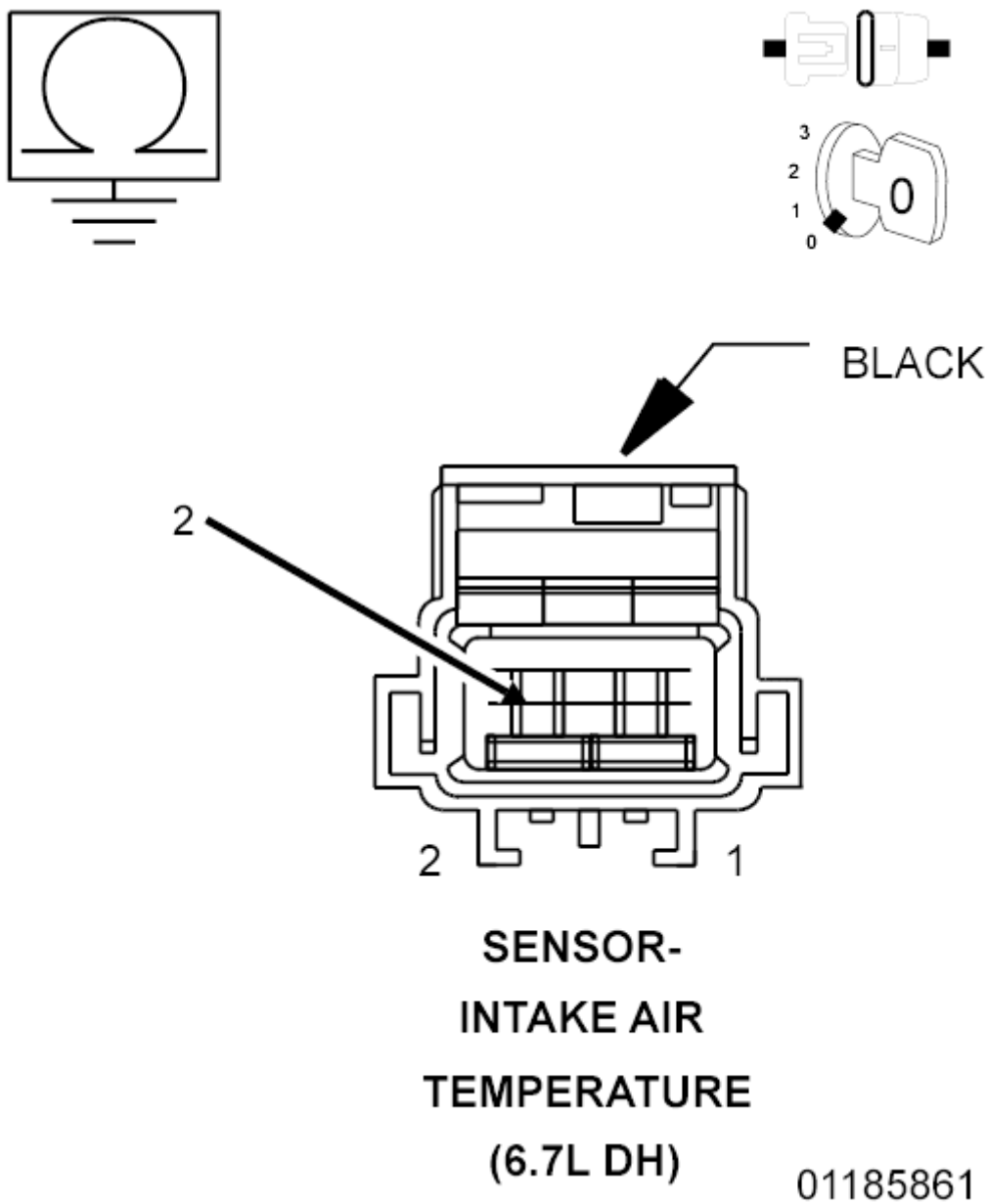

Fig. 43: Checking Intake Manifold Temperature Sensor Signal Circuit For Short To Ground
Courtesy of CHRYSLER GROUP, LLC

1. Disconnect the PCM C1 harness connector.

   NOTE: Check connectors - Clean/repair as necessary.

2. Measure the resistance between ground and the (K21) Intake Manifold Temperature Sensor Signal circuit at the Intake Manifold Temperature Sensor harness connector.

   Is the resistance below 10k Ohms?

Yes

- Repair the (K21) Intake Manifold Temperature Sensor Signal circuit for a short to ground.
- Perform the POWERTRAIN VERIFICATION TEST - 6.7L. Refer to **POWERTRAIN VERIFICATION TEST - 6.7L** .

No

- Go To 4.

4. **CHECK FOR THE (K21) INTAKE MANIFOLD TEMPERATURE SENSOR SIGNAL CIRCUIT SHORTED TO THE (K914) SENSOR GROUND CIRCUIT**

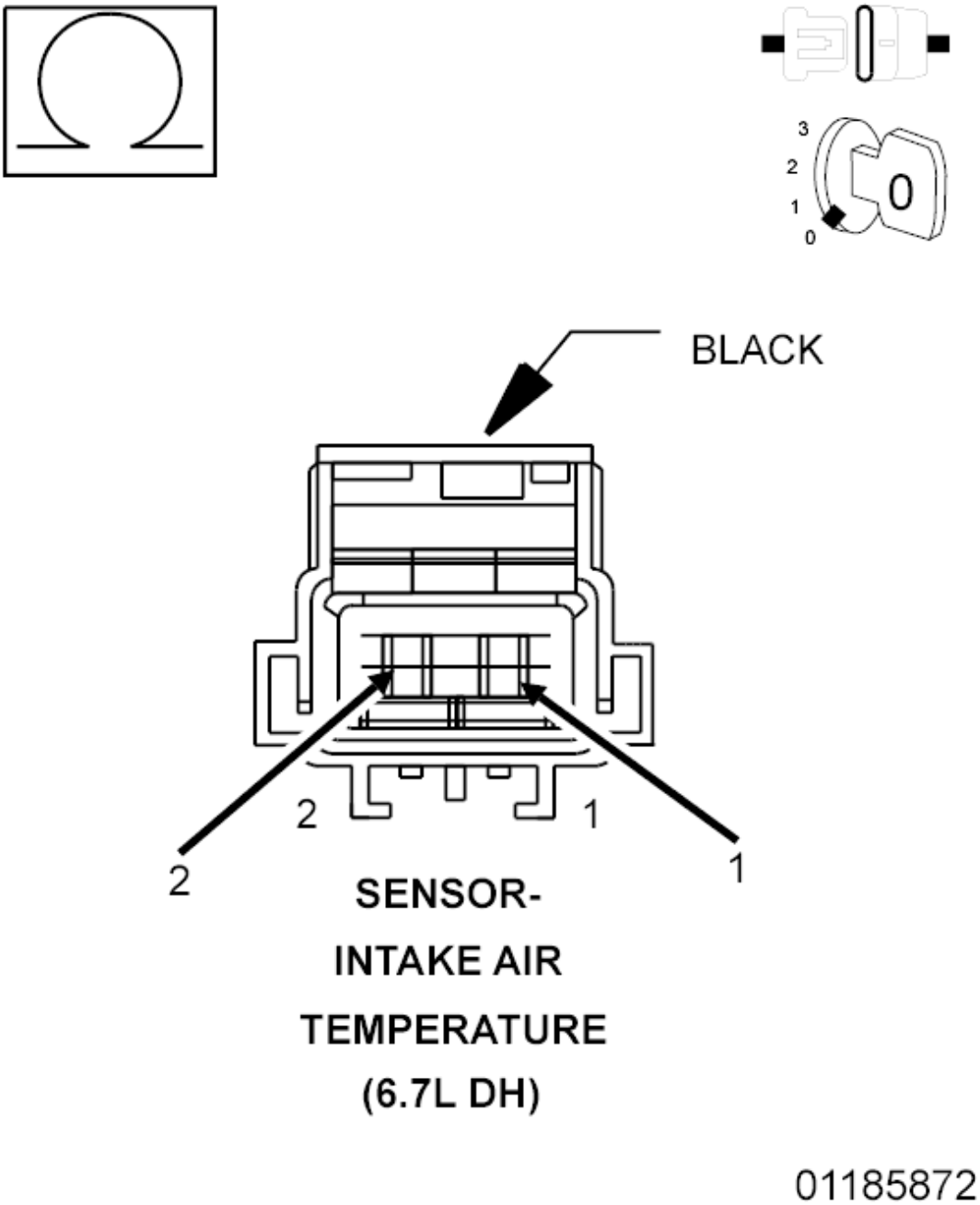

Fig. 44: Checking Intake Manifold Temperature Sensor Signal Circuit Shorted To Sensor Ground Circuit
Courtesy of CHRYSLER GROUP, LLC

1. Measure the resistance between the (K21) Intake Manifold Temperature Sensor Signal circuit and the (K914) Intake Manifold Temperature Sensor Ground circuit at the Intake Manifold Temperature Sensor harness connector.

   Is the resistance below 10k Ohms?

Yes

- Repair the short between the (K21) Intake Manifold Temperature Sensor Signal circuit and the (K914) Intake Manifold Temperature Sensor Ground circuit.
- Perform the POWERTRAIN VERIFICATION TEST - 6.7L. Refer to **POWERTRAIN VERIFICATION TEST - 6.7L** .

No

- Replace the Powertrain Control Module in accordance with the service information.
- Perform the POWERTRAIN VERIFICATION TEST - 6.7L. Refer to **POWERTRAIN VERIFICATION TEST - 6.7L** .

P0113-INTAKE AIR TEMPERATURE SENSOR 1 CIRCUIT HIGH

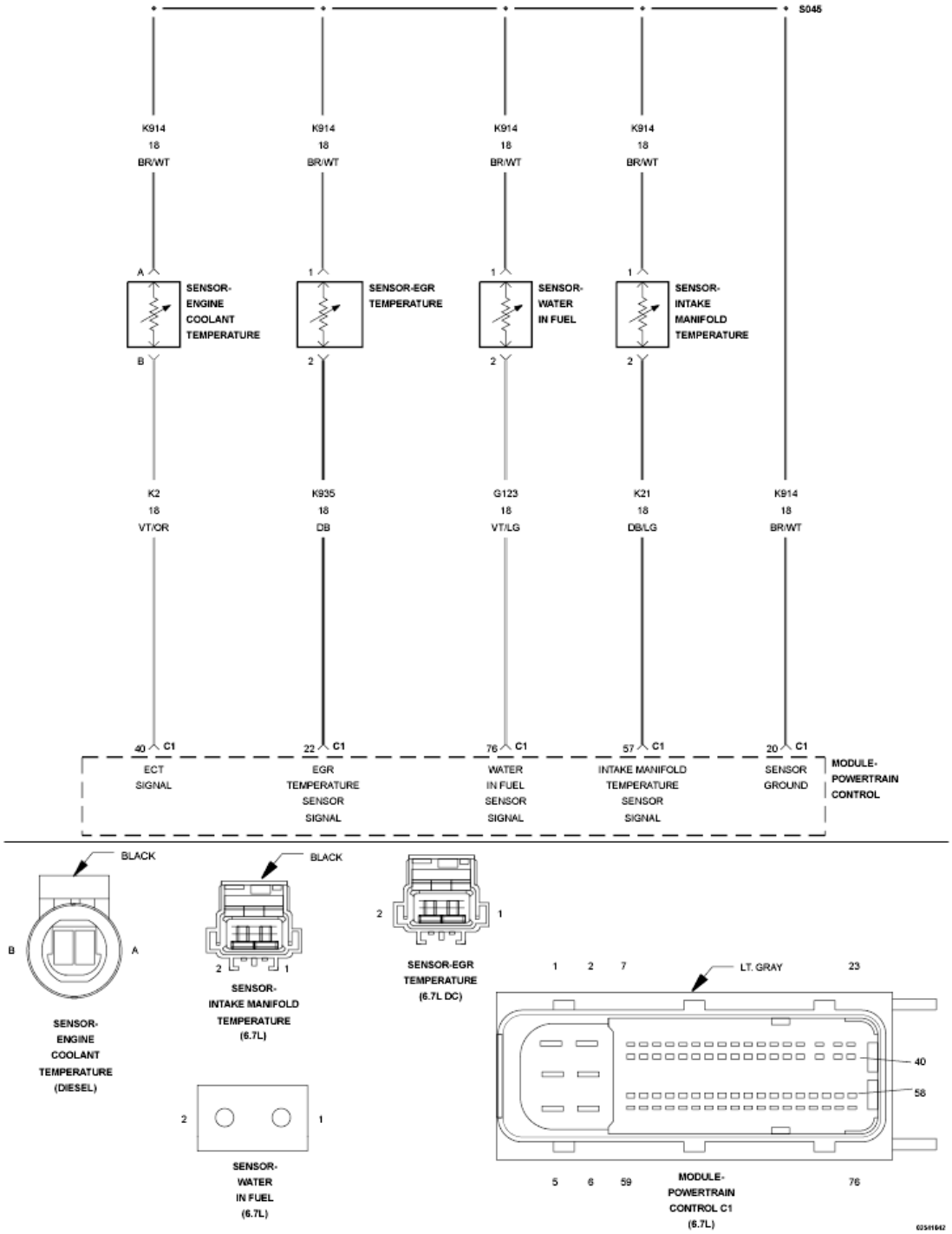

Fig. 45: Intake Manifold Temp, Engine Coolant Temp, EGR Temp, & Water In Fuel Sensor Circuit Schematic
Courtesy of CHRYSLER GROUP, LLC

For a complete wiring diagram, **refer to appropriate SYSTEM WIRING DIAGRAMS article** .

THEORY OF OPERATION

The Intake Manifold Temperature Sensor is located on the intake manifold and is used to measure the temperature of the air in the intake manifold of the engine. The Powertrain Control Module (PCM) supplies 5-Volts to the intake manifold temperature signal circuit. The PCM monitors the change in voltage caused by changes in the resistance of the sensor to determine the intake manifold temperature. The MIL lamp is illuminated immediately when the diagnostic runs and fails. During this time the customer may notice periods of white smoke as well as the fan running more often. The MIL lamp is turned off once the diagnostic runs and passes in four consecutive drive cycles.

WHEN MONITORED:

The PCM monitors the change in signal voltage and converts this to a temperature value.

SET CONDITION:

The (K21) Intake Manifold Temperature Sensor Signal circuit goes above 4.75 Volts for five seconds.

POSSIBLE CAUSES

Possible Causes
(K21) INTAKE MANIFOLD TEMPERATURE SENSOR SIGNAL CIRCUIT SHORTED TO VOLTAGE
(K21) INTAKE MANIFOLD TEMPERATURE SENSOR SIGNAL CIRCUIT OPEN/HIGH RESISTANCE
(K914) INTAKE MANIFOLD TEMPERATURE SENSOR RETURN CIRCUIT OPEN/HIGH RESISTANCE
INTAKE AIR TEMPERATURE SENSOR
POWERTRAIN CONTROL MODULE (PCM)

Always perform the Pre-Diagnostic Troubleshooting procedure before proceeding. Refer to PRE-DIAGNOSTIC TROUBLESHOOTING PROCEDURE - 6.7L .

DIAGNOSTIC TEST

1. **ACTIVE DTC**
    1. Turn the ignition on.
    2. With the scan tool, record all Freeze frame data.
    3. With the scan tool, erase DTCs.
    4. Turn the ignition off for 75 seconds.
    5. Turn the ignition on.
    6. With the scan tool, read DTCs.

    Did the DTC reset?

    Yes

- Go To 2.

No

- Perform the INTERMITTENT CONDITION - 6.7L diagnostic procedure. Refer to **INTERMITTENT CONDITION - 6.7L** .

2. **CHECK THE (K21) INTAKE MANIFOLD TEMPERATURE SENSOR SIGNAL CIRCUIT FOR A SHORT TO VOLTAGE**

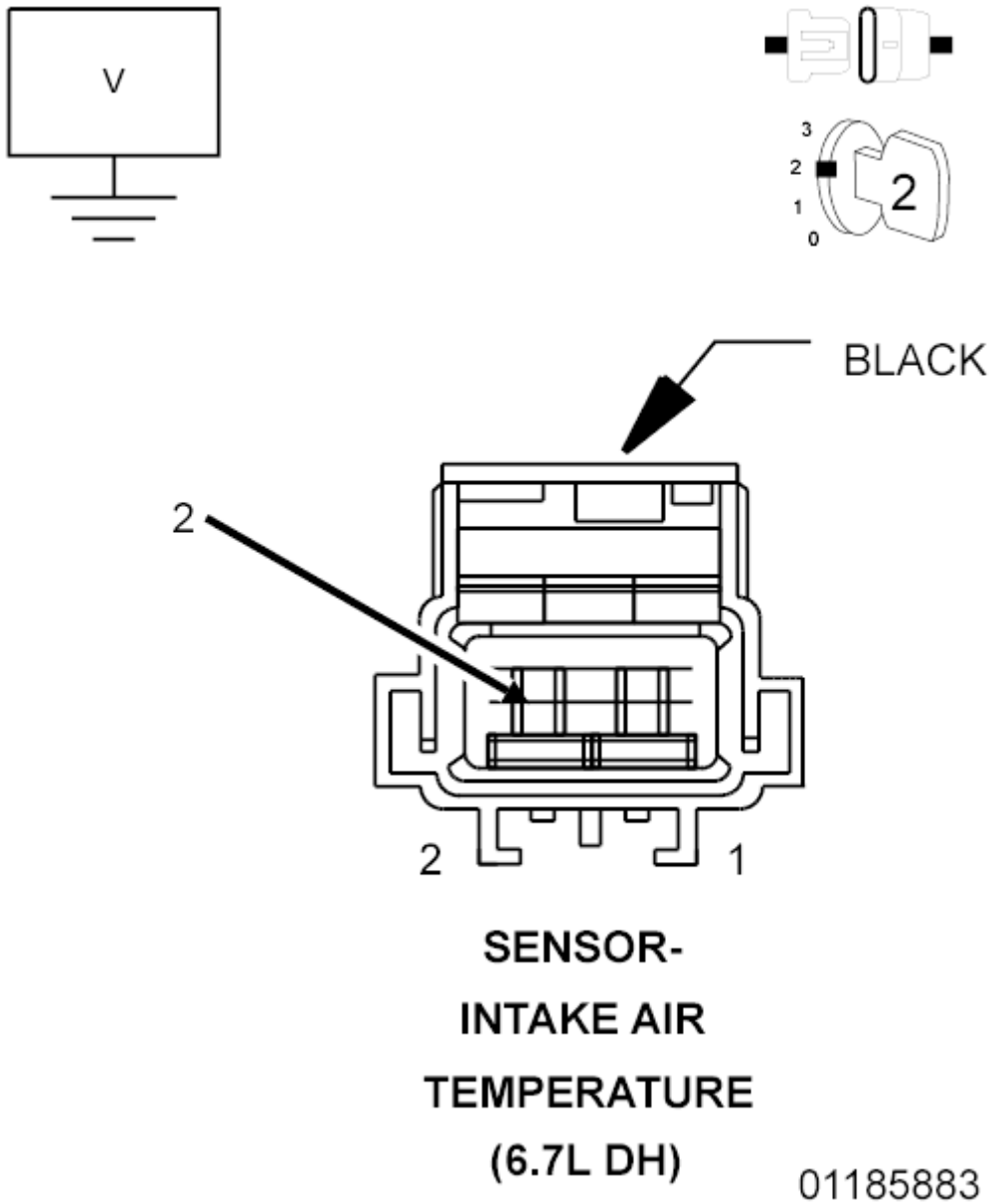

Fig. 46: Checking Intake Manifold Temperature Sensor Signal Circuit Shorted To Voltage
Courtesy of CHRYSLER GROUP, LLC

1. Ignition on.
2. Disconnect the Intake Manifold Temperature Sensor harness connector.

NOTE: Check connectors - Clean/repair as necessary.

3. With a voltmeter connected to ground, measure the voltage of the (K21) Intake Manifold Temperature Sensor Signal circuit at the Intake Manifold Temperature Sensor harness connector.

   Is the voltage above 5.1 Volts?

   Yes

   - Repair the (K21) Intake Manifold Temperature Sensor Signal circuit for a short to voltage.
   - Perform the POWERTRAIN VERIFICATION TEST - 6.7L. Refer to **POWERTRAIN VERIFICATION TEST - 6.7L** .

   No

   - Go To 3.

3. **CHECK THE INTAKE AIR TEMPERATURE SENSOR**
   1. Turn the ignition off.
   2. Measure the resistance across the terminals of the Intake Manifold Temperature Sensor.

      Is the resistance between 300 and 90k Ohms?

      Yes

      - Go To 4.

      No

      - Replace the Intake Manifold Temperature Sensor in accordance with the service information.
      - Perform the POWERTRAIN VERIFICATION TEST - 6.7L. Refer to **POWERTRAIN VERIFICATION TEST - 6.7L** .

4. **CHECK THE (K21) INTAKE MANIFOLD TEMPERATURE SENSOR SIGNAL CIRCUIT FOR AN OPEN/HIGH RESISTANCE**

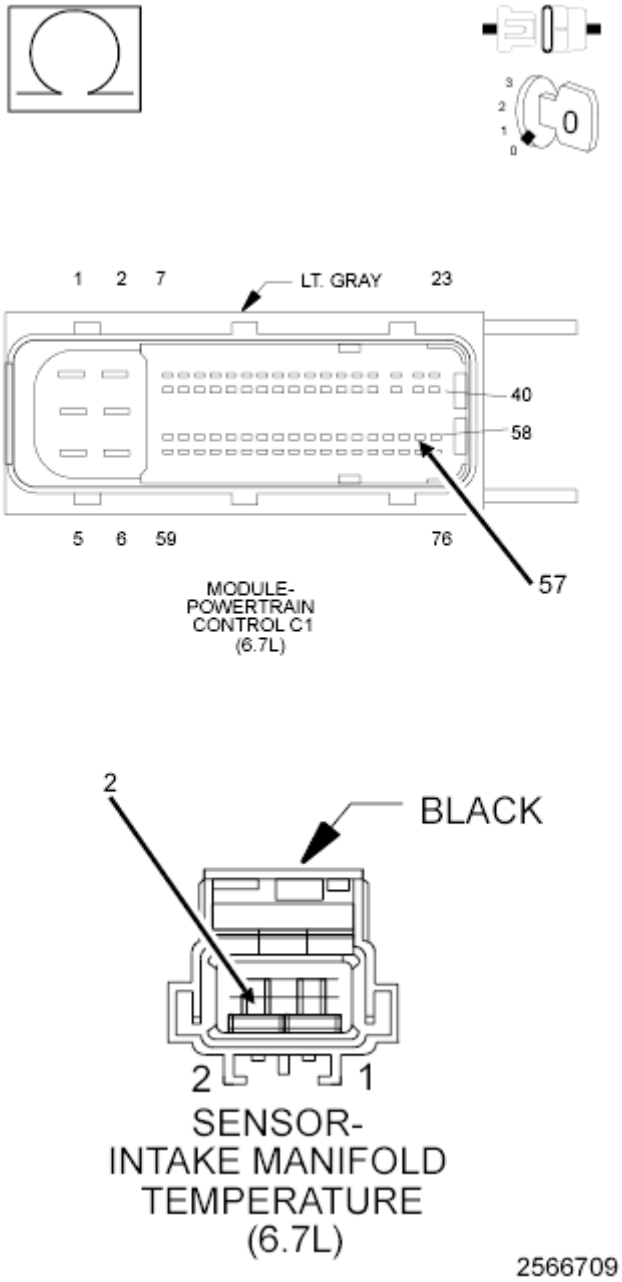

Fig. 47: Checking Intake Manifold Temperature Sensor Signal Circuit For Open Or High Resistance
Courtesy of CHRYSLER GROUP, LLC

1. Disconnect the PCM C1 harness connector.

   NOTE: Check connectors - Clean/repair as necessary.

2. Measure the resistance of the (K21) Intake Manifold Temperature Sensor Signal circuit between the Intake Manifold Temperature Sensor harness connector and the PCM C1 harness connector.

Is the resistance below 5.0 Ohms?

Yes

- Go To 5.

No

- Repair the (K21) Intake Manifold Temperature Sensor Signal circuit for an open or high resistance.
- Perform the POWERTRAIN VERIFICATION TEST - 6.7L. Refer to **POWERTRAIN VERIFICATION TEST - 6.7L** .

5. **CHECK THE (K914) INTAKE MANIFOLD TEMPERATURE SENSOR RETURN CIRCUIT FOR AN OPEN/HIGH RESISTANCE**

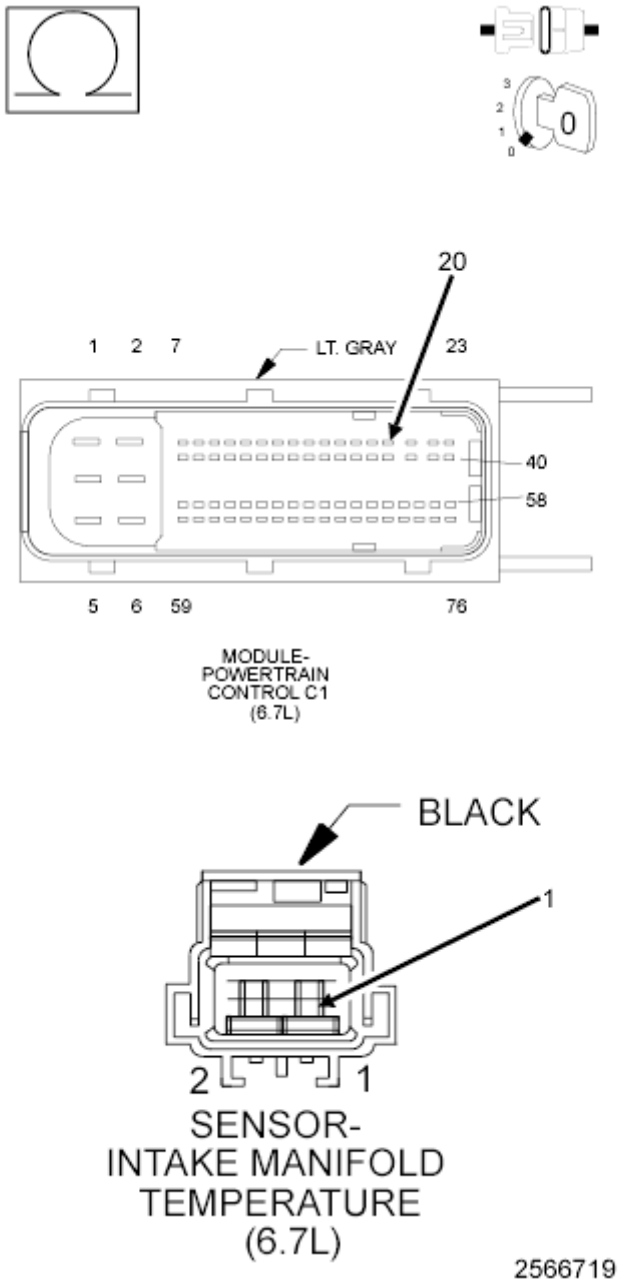

Fig. 48: Checking Intake Manifold Temperature Sensor Return Circuit For Open Or High Resistance
Courtesy of CHRYSLER GROUP, LLC

1. Measure the resistance of the (K914) Intake Manifold Temperature Sensor Return circuit between the Intake Manifold Temperature Sensor harness connector and the PCM C1 harness connector.

   Is the resistance below 5.0 Ohms?

   Yes

- Replace the Powertrain Control Module in accordance with the service information.
- Perform the POWERTRAIN VERIFICATION TEST - 6.7L. Refer to **POWERTRAIN VERIFICATION TEST - 6.7L** .

No

- Repair the (K914) Intake Manifold Temperature Sensor Return circuit for an open or high resistance.
- Perform the POWERTRAIN VERIFICATION TEST - 6.7L. Refer to **POWERTRAIN VERIFICATION TEST - 6.7L** .

P0116-ENGINE COOLANT TEMPERATURE SENSOR PERFORMANCE

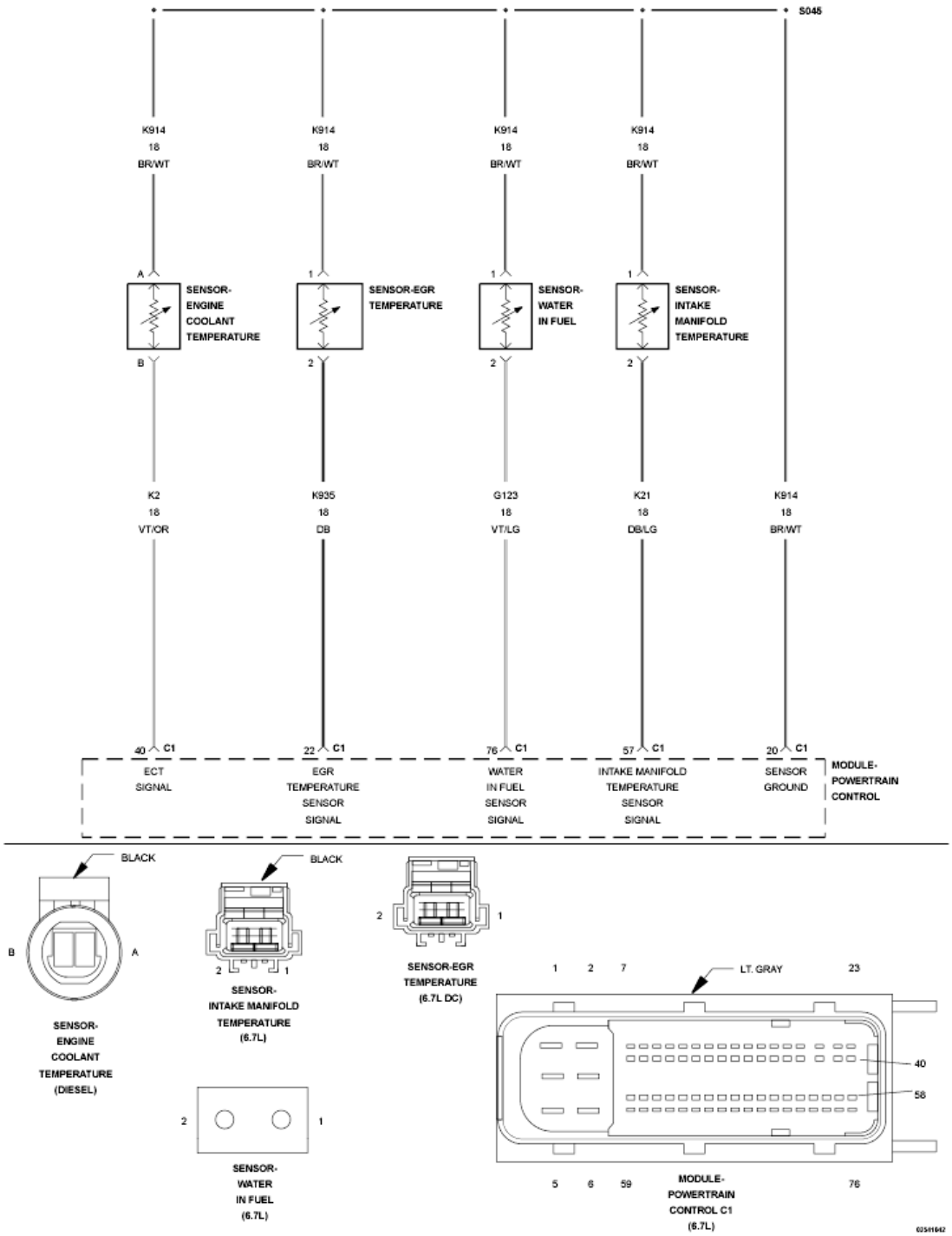

Fig. 49: Intake Manifold Temp, Engine Coolant Temp, EGR Temp, & Water In Fuel Sensor Circuit Schematic
Courtesy of CHRYSLER GROUP, LLC

For a complete wiring diagram, **refer to appropriate SYSTEM WIRING DIAGRAMS article** .

THEORY OF OPERATION

The Engine Coolant Temperature Sensor (ECT) is located near the thermostat housing and is used to measure the engine coolant temperature. The Engine Coolant Temperature Sensor recieves 5-Volts and a sensor ground from the Powertrain Control Module (PCM). The PCM monitors the change in voltage to determine the coolant temperature. There are two parts to this fault code, a key on check and a rationality check. After an eight hour cold soak, at key on the readings for the EGR Temperature, Inlet Air Temperature and Engine Coolant Temperature Sensors are all compared. If the temperatures differ more than a calibrated amount, then the appropriate sensor fault code would be recorded. This monitor looks for all the sensors to be grouped on one temperature or, in the case that the monitor fails, two sensors grouped at one temperature and one outlier. In the case that all three sensor values are distributed over a range of temperatures this diagnostic will not run. A block heater is one possible cause of such a distribution. The Coolant Temperature Sensor rationality check looks at the temperature reading from the sensor over time and ensures that it changes with engine running. If the sensor reading does not change over a calibrated time limit, the fault will be recorded. Both the key-on and rationality portions of this monitor require that the diagnostic fails in two consecutive drive cycles before the MIL lamp is lit. During this time the PCM uses a default value for the Coolant Temperature Sensor. The PCM turns off the MIL lamp when the diagnostic runs and passes in four consecutive drive cycles.

WHEN MONITORED:

While the engine is running.

SET CONDITION:

The Powertrain Control Module (PCM) does not read a change in value from the sensor over time.

POSSIBLE CAUSES

Possible Causes
LOW COOLANT LEVEL COOLANT TEMPERATURE SENSOR THERMOSTAT

Always perform the Pre-Diagnostic Troubleshooting procedure before proceeding. Refer to PRE-DIAGNOSTIC TROUBLESHOOTING PROCEDURE - 6.7L .

DIAGNOSTIC TEST

1. **CHECK THE COOLANT LEVEL**
    1. Turn the ignition off.
    2. With the engine cold, verify the level of coolant in the cooling system.

       Is the cooling system full of coolant?

       Yes

       - Go To 2.

       No

- Fill the cooling system to the proper level.
- Perform the POWERTRAIN VERIFICATION TEST - 6.7L. Refer to **POWERTRAIN VERIFICATION TEST - 6.7L** .

2. **THERMOSTAT**
   1. With the scan tool, check DTCs.

      NOTE: If DTC P0117 or P0118 are present, repair those DTCs before proceeding with this test.

      Is DTC P0128-Thermostat Rationality present?

      Yes

      - Replace the Thermostat.
      - Perform the POWERTRAIN VERIFICATION TEST - 6.7L. Refer to **POWERTRAIN VERIFICATION TEST - 6.7L** .

      No

      - Go To 3.

3. **COOLANT TEMPERATURE SENSOR**
   1. Remove the Coolant Temperature Sensor and reconnect the wiring to the sensor.
   2. Turn the ignition on.
   3. Monitor scan tool while heating the sensor with an external heat source (DO NOT USE OPEN FLAME).

      Does the reading from the Coolant Temperature Sensor increase at least 5°F on the scan tool?

      Yes

      - Go To 4.

      No

      - Replace the Coolant Temperature Sensor.
      - Perform the POWERTRAIN VERIFICATION TEST - 6.7L. Refer to **POWERTRAIN VERIFICATION TEST - 6.7L** .

4. **COOLANT TEMPERATURE SENSOR**
   1. Let vehicle cold soak for eight hours.
   2. Turn the ignition on.
   3. With a scan tool, monitor Inlet Air Temperature, EGR Temperature and Coolant Temperature Sensors.

NOTE: **Make sure the Ambient Air Temperature is above 20°F.**

NOTE: **Make sure there is no external heat source, such as a block heater, operating during this test or within the 8 hour cold soak.**

Does the Coolant Temperature Sensor read more than a 18°F (10°C) above or below the other sensors?

Yes

- Replace the Coolant Temperature Sensor.
- Perform the POWERTRAIN VERIFICATION TEST - 6.7L. Refer to **POWERTRAIN VERIFICATION TEST - 6.7L** .

No

- Perform the INTERMITTENT CONDITION - 6.7L diagnostic procedure. Refer to **INTERMITTENT CONDITION - 6.7L** .

P0117-ENGINE COOLANT TEMPERATURE SENSOR CIRCUIT LOW

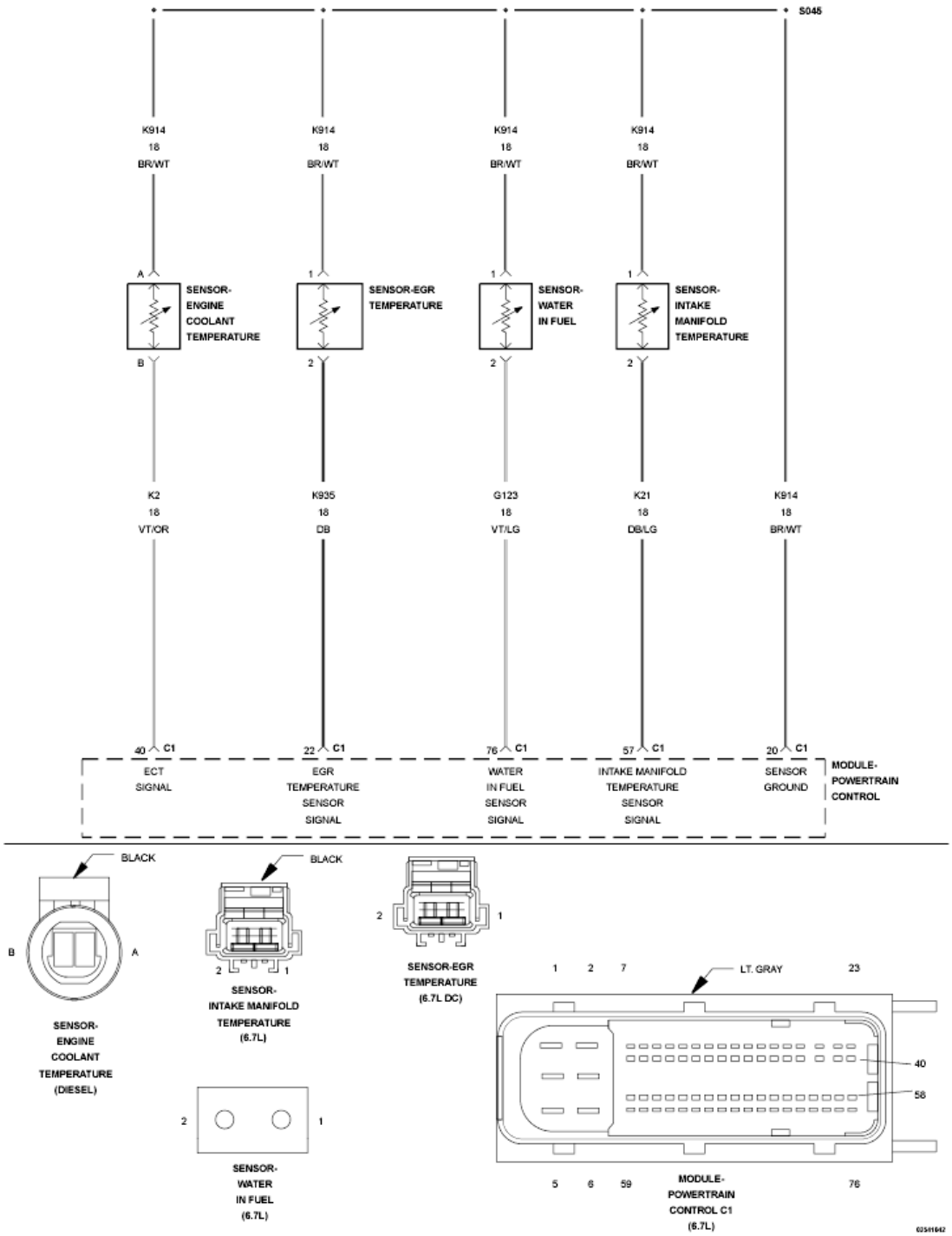

Fig. 50: Intake Manifold Temp, Engine Coolant Temp, EGR Temp, & Water In Fuel Sensor Circuit Schematic
Courtesy of CHRYSLER GROUP, LLC

For a complete wiring diagram, **refer to appropriate SYSTEM WIRING DIAGRAMS article** .

THEORY OF OPERATION

The Engine Coolant Temperature Sensor (ECT) is located near the thermostat housing and is used to measure the engine coolant temperature. The Engine Coolant Temperature Sensor receives 5-Volts and a sensor ground from the PCM. The PCM monitors the change in voltage to determine the coolant temperature. There are two parts to this fault code, a key on check and a rationality check. After an eight hour cold soak, at key on the readings for the Inlet Air Temperature, Intake Air Temperature and Engine Coolant Temperature Sensors are all compared. If the temperatures differ more than a calibrated amount, then the appropriate sensor fault code would be recorded. The key on monitor is disabled for ambient temperatures below 20°F. This monitor looks for all the sensors to be grouped on one temperature or, in the case that the monitor fails, two sensors grouped at one temperature and one outlier. In the case that all three sensor values are distributed over a range of temperatures this diagnostic will not run. A block heater is one possible cause of such a distribution. The PCM rationality check looks at the temperature reading from the sensor over time and ensures that it changes with engine running. If the sensor reading does not change over a calibrated time limit, the fault will be recorded. Both the key-on and rationality portions of this monitor require that the diagnostic fails in two consecutive drive cycles before the MIL lamp is lit. The ETC lamp will also be illuminated. During this time the PCM uses a default value for the Coolant Temperature Sensor. The PCM turns off the MIL lamp when the diagnostic runs and passes in four consecutive drive cycles.

WHEN MONITORED:

With ignition on and battery voltage greater than 10.4 Volts.

SET CONDITION:

The circuit voltage to the Powertrain Control Module (PCM) falls below a calibrated threshold for a certain period of time.

POSSIBLE CAUSES

Possible Causes
(K2) ENGINE COOLANT TEMPERATURE SENSOR SIGNAL CIRCUIT SHORTED TO GROUND (K2) ENGINE COOLANT TEMPERATURE SENSOR SIGNAL CIRCUIT SHORTED TO (K914) ENGINE COOLANT TEMPERATURE SENSOR RETURN CIRCUIT ENGINE COOLANT TEMPERATURE SENSOR
POWERTRAIN CONTROL MODULE (PCM)

Always perform the Pre-Diagnostic Troubleshooting procedure before proceeding. Refer to PRE-DIAGNOSTIC TROUBLESHOOTING PROCEDURE - 6.7L .

DIAGNOSTIC TEST

1. **ACTIVE DTC**
    1. Turn the ignition on.
    2. With the scan tool, record all Freeze frame data.
    3. With the scan tool, erase DTCs.
    4. Turn the ignition off for 75 seconds.
    5. Turn the ignition on.

6. With the scan tool, read DTCs.

   Did the DTC reset?

   Yes

   - Go To 2.

   No

   - Perform the INTERMITTENT CONDITION - 6.7L diagnostic procedure. Refer to **INTERMITTENT CONDITION - 6.7L** .

2. **CHECK THE COOLANT TEMPERATURE SENSOR**
   1. Turn the ignition off.
   2. Disconnect the Engine Coolant Temperature Sensor (ECT) harness connector.

      NOTE: Check connectors - Clean/repair as necessary.

   3. Measure the resistance between ground and one of the terminals of the ECT Sensor.

      Is the resistance below 10k Ohms?

      Yes

      - Replace the Engine Coolant Temperature Sensor in accordance with the service information.
      - Perform the POWERTRAIN VERIFICATION TEST - 6.7L. Refer to **POWERTRAIN VERIFICATION TEST - 6.7L** .

      No

      - Go To 3.

3. **CHECK THE (K2) ENGINE COOLANT TEMPERATURE SENSOR SIGNAL CIRCUIT FOR A SHORT TO GROUND**

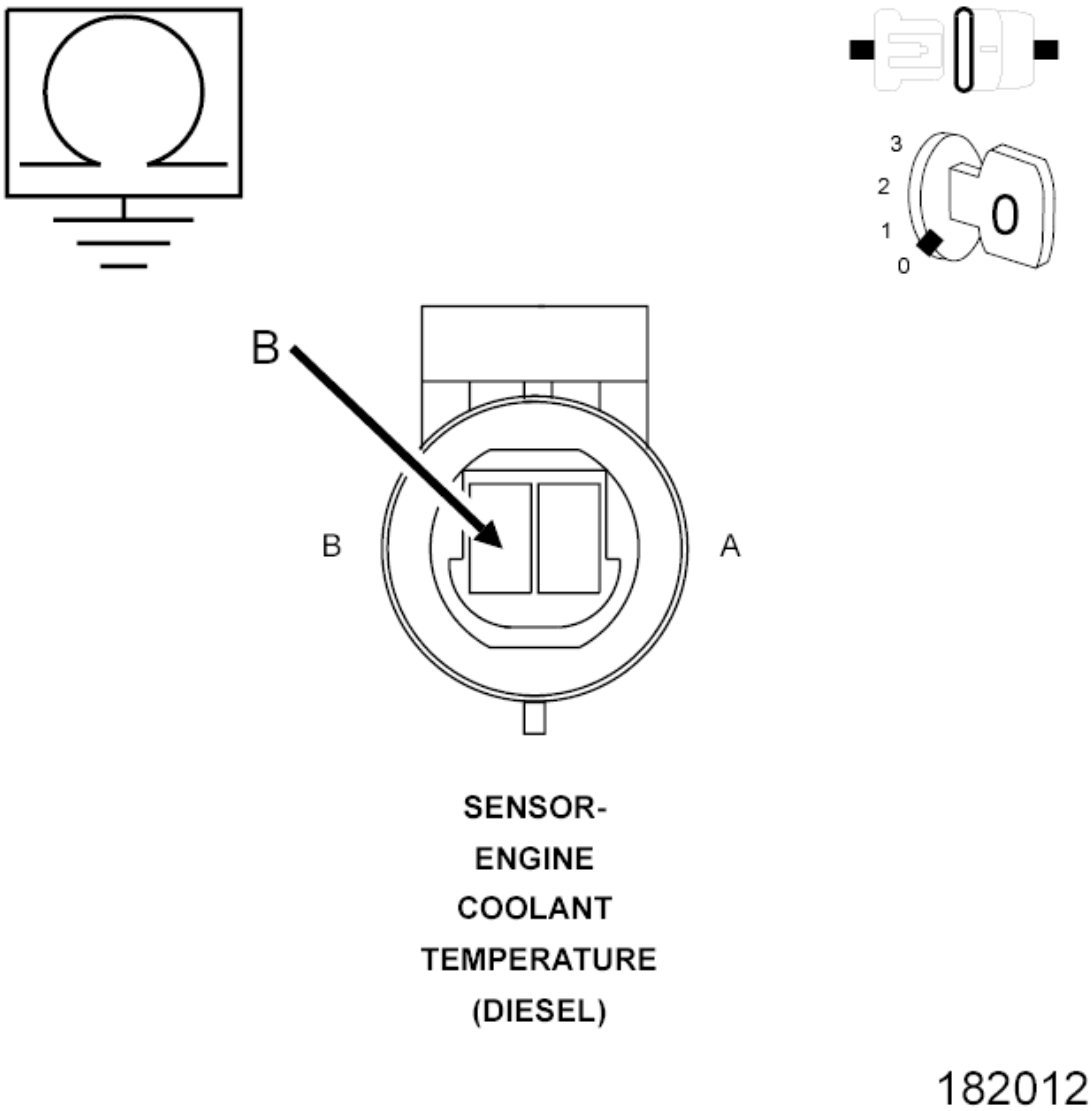

Fig. 51: Checking Coolant Temperature Sensor Signal Circuit For Short To Ground
Courtesy of CHRYSLER GROUP, LLC

1. Disconnect the PCM C1 harness connector.

   NOTE: Check connectors - Clean/repair as necessary.

2. Measure the resistance between ground and the (K2) ECT Sensor Signal circuit at the ECT Sensor harness connector.

   Is the resistance below 10k Ohms?

   Yes

   - Repair the (K2) ECT Sensor Signal circuit for a short to ground.

- Perform the POWERTRAIN VERIFICATION TEST - 6.7L. Refer to **POWERTRAIN VERIFICATION TEST - 6.7L** .

No

- Go To 4.

4. **CHECK FOR THE (K2) ENGINE COOLANT TEMPERATURE SENSOR SIGNAL CIRCUIT SHORTED TO THE (K914) ENGINE COOLANT TEMPERATURE SENSOR RETURN CIRCUIT**

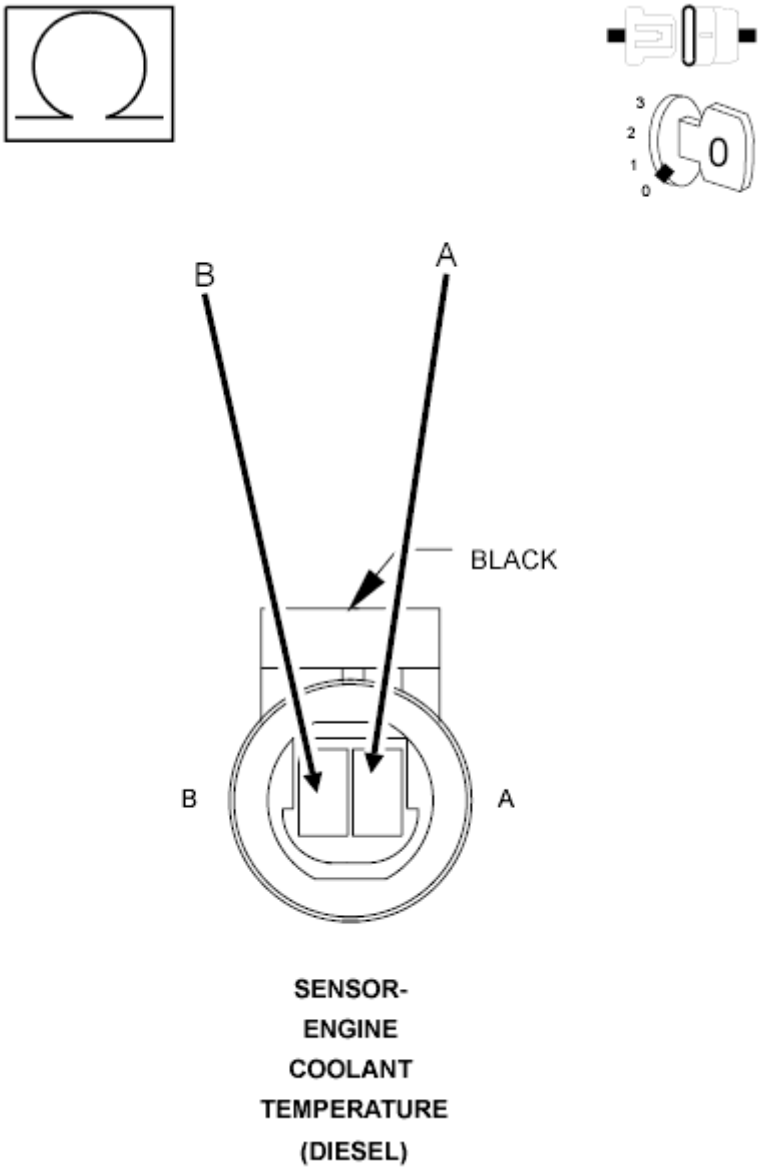

Fig. 52: Checking Coolant Temperature Sensor Signal Circuit Shorted To Sensor Return Circuit
Courtesy of CHRYSLER GROUP, LLC

1. Measure the resistance between the (K2) ECT Sensor Signal circuit and the (K914) Sensor Ground circuit at the Coolant Temperature Sensor harness connector.

   Is the resistance below 10k Ohms?

   Yes

   - Repair the short between the (K2) ECT Sensor Signal circuit and the (K914) Sensor Ground circuit.
   - Perform the POWERTRAIN VERIFICATION TEST - 6.7L. Refer to **POWERTRAIN VERIFICATION TEST - 6.7L** .

   No

   - Replace the Powertrain Control Module in accordance with the service information.
   - Perform the POWERTRAIN VERIFICATION TEST - 6.7L. Refer to **POWERTRAIN VERIFICATION TEST - 6.7L** .

P0118-ENGINE COOLANT TEMPERATURE SENSOR CIRCUIT HIGH

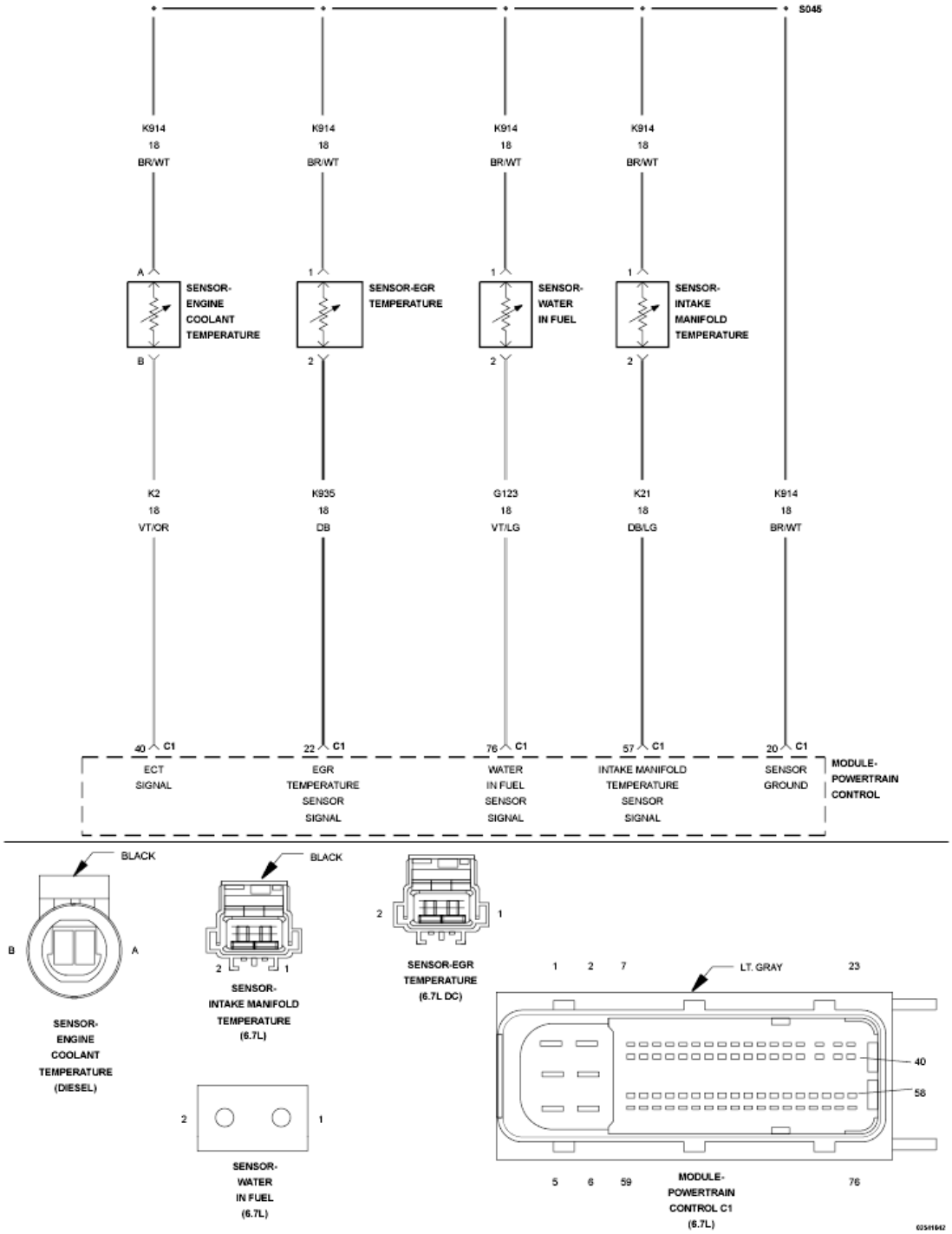

Fig. 53: Intake Manifold Temp, Engine Coolant Temp, EGR Temp, & Water In Fuel Sensor Circuit Schematic
Courtesy of CHRYSLER GROUP, LLC

For a complete wiring diagram, **refer to appropriate SYSTEM WIRING DIAGRAMS article** .

THEORY OF OPERATION

The Engine Coolant Temperature Sensor (ECT) is located near the thermostat housing and is used to measure the engine coolant temperature. The Engine Coolant Temperature Sensor receives 5-Volts and a sensor ground from the Powertrain Control Module (PCM). The PCM monitors the change in voltage to determine the coolant temperature. There are two parts to this fault code, a key on check and a rationality check. After an eight hour cold soak, at key ON the readings for the Inlet Air Temperature, Intake Air Temperature and Engine Coolant Temperature Sensors are all compared. If the temperatures differ more than a calibrated amount, then the appropriate sensor fault code would be recorded. The key on monitor is disabled for ambient temperatures below 20°F. This monitor looks for all the sensors to be grouped on one temperature or, in the case that the monitor fails, two sensors grouped at one temperature and one outlier. In the case that all three sensor values are distributed over a range of temperatures this diagnostic will not run. A block heater is one possible cause of such a distribution. The PCM rationality check looks at the temperature reading from the sensor over time and ensures that it changes with engine running. If the sensor reading does not change over a calibrated time limit, the fault will be recorded. Both the key-on and rationality portions of this monitor require that the diagnostic fails in two consecutive drive cycles before the MIL lamp is lit. The ETC lamp will also be illuminated. During this time the PCM uses a default value for the Coolant Temperature Sensor. The PCM turns off the MIL lamp when the diagnostic runs and passes in four consecutive drive cycles.

WHEN MONITORED:

With ignition on and battery voltage greater than 10.4 Volts.

SET CONDITION:

The circuit voltage to the Powertrain Control Module (PCM) is above a calibrated threshold for a certain period of time.

POSSIBLE CAUSES

Possible Causes
(K2) ENGINE COOLANT TEMPERATURE SENSOR SIGNAL CIRCUIT OPEN/HIGH RESISTANCE
(K2) ENGINE COOLANT TEMPERATURE SENSOR SIGNAL CIRCUIT SHORTED TO VOLTAGE
(K914) SENSOR RETURN CIRCUIT OPEN/HIGH RESISTANCE
ENGINE COOLANT TEMPERATURE SENSOR
POWERTRAIN CONTROL MODULE (PCM)

Always perform the Pre-Diagnostic Troubleshooting procedure before proceeding. Refer to PRE-DIAGNOSTIC TROUBLESHOOTING PROCEDURE - 6.7L .

DIAGNOSTIC TEST

1. **ACTIVE DTC**
    1. Turn the ignition on.
    2. With the scan tool, record all Freeze frame data.
    3. With the scan tool, erase DTCs.
    4. Turn the ignition off for 75 seconds.

5. Turn the ignition on.
6. With the scan tool, read DTCs.

   Did the DTC reset?

   Yes

   - Go To 2.

   No

   - Perform the INTERMITTENT CONDITION - 6.7L diagnostic procedure. Refer to **INTERMITTENT CONDITION - 6.7L** .

2. **CHECK THE (K2) ENGINE COOLANT TEMPERATURE SENSOR SIGNAL CIRCUIT FOR A SHORT TO VOLTAGE**

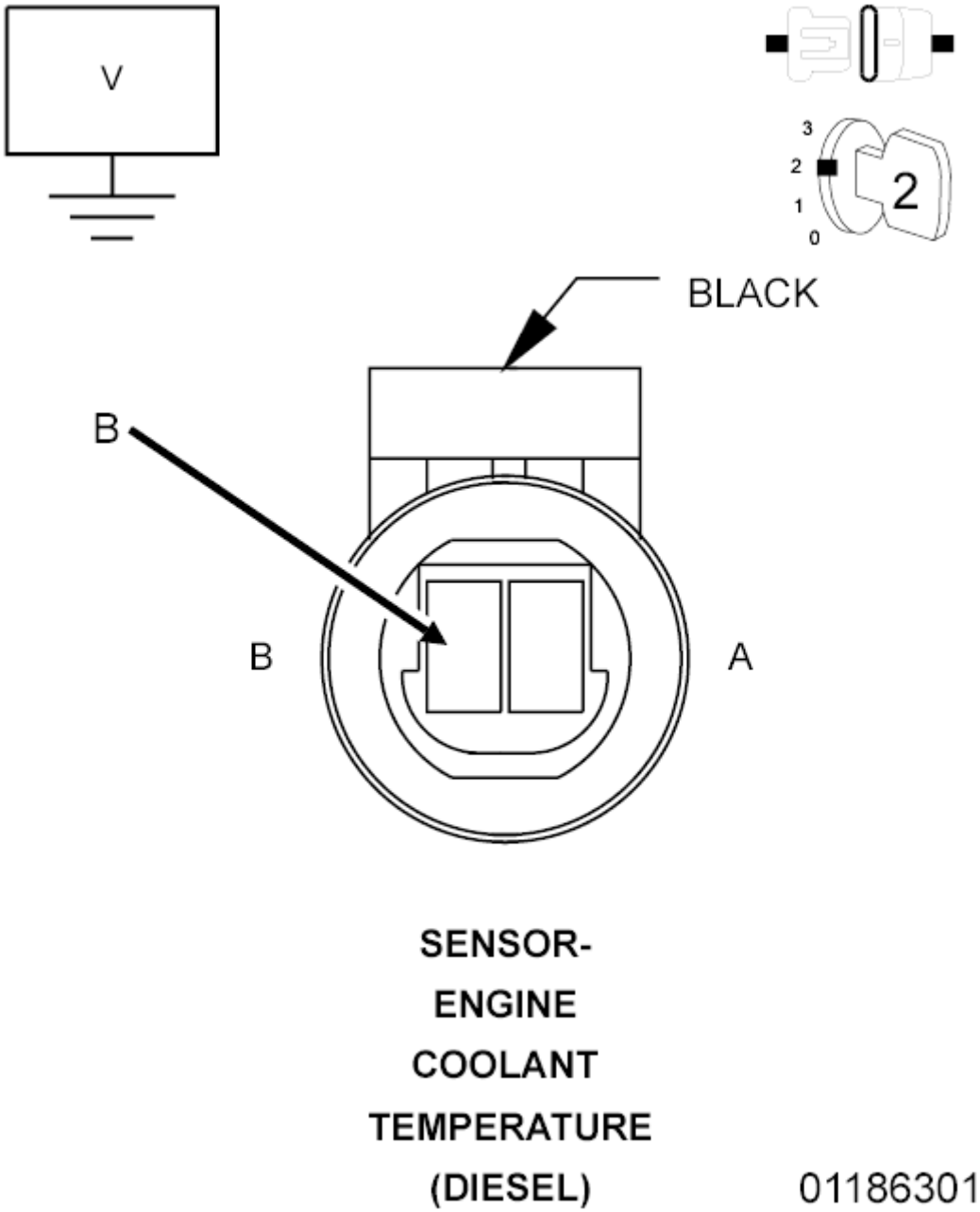

Fig. 54: Checking Coolant Temperature Sensor Signal Circuit For Short To Voltage
Courtesy of CHRYSLER GROUP, LLC

1. Ignition on.
2. Disconnect the Coolant Temperature Sensor harness connector.
3. Measure the voltage of the (K2) Engine Coolant Temperature Sensor (ECT) Signal circuit at the sensor harness connector.

NOTE: **The voltage should read approximately 5.0 Volts with connector disconnected and key on.**

Is the voltage above 5.1 Volts?

Yes

- Repair the (K2) ECT Sensor Signal circuit for a short to voltage.
- Perform the POWERTRAIN VERIFICATION TEST - 6.7L. Refer to **POWERTRAIN VERIFICATION TEST - 6.7L** .

No

- Go To 3.

3. **CHECK THE ENGINE COOLANT TEMPERATURE SENSOR**
   1. Turn the ignition off.

      NOTE: Check connectors - Clean/repair as necessary.

   2. Measure the resistance across the terminals of the ECT Sensor.

      Is the resistance between 300 and 90k Ohms?

      Yes

      - Go To 4.

      No

      - Replace the Engine Coolant Temperature Sensor in accordance with the service information.
      - Perform the POWERTRAIN VERIFICATION TEST - 6.7L. Refer to **POWERTRAIN VERIFICATION TEST - 6.7L** .

4. **CHECK THE (K2) ENGINE COOLANT TEMPERATURE SENSOR SIGNAL CIRCUIT FOR AN OPEN/HIGH RESISTANCE**

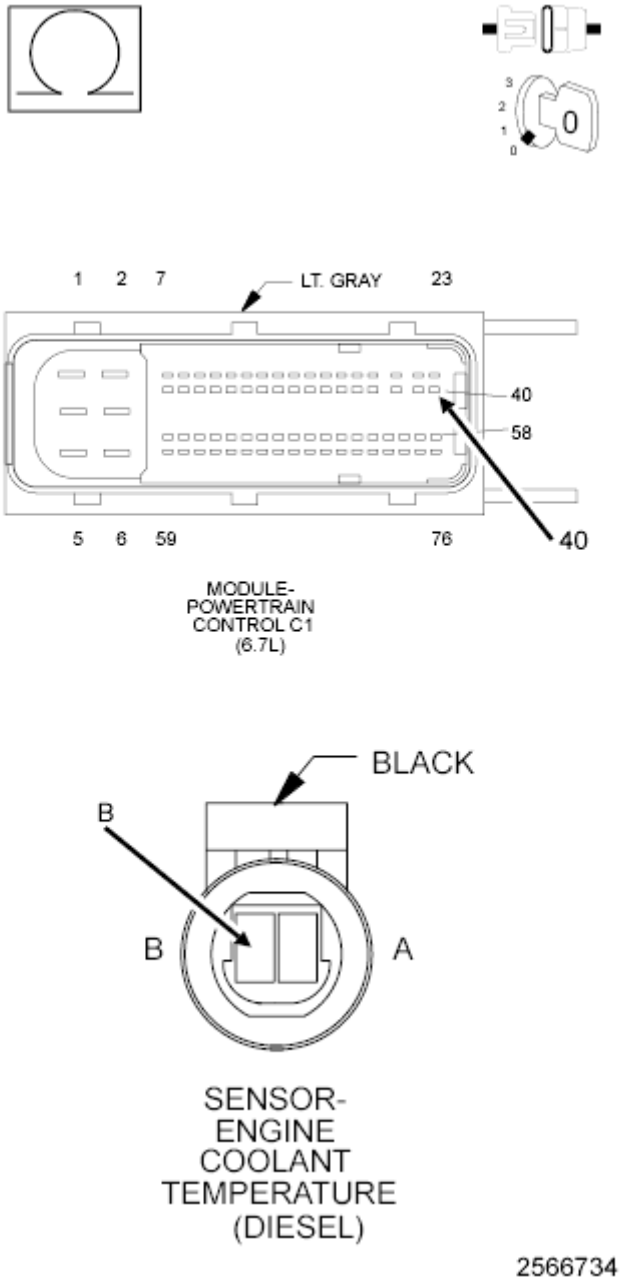

Fig. 55: Checking Engine Coolant Temperature Sensor Signal Circuit For Open Or High Resistance
Courtesy of CHRYSLER GROUP, LLC

1. Disconnect the PCM C1 harness connector.
2. Measure the resistance of the (K2) ECT Sensor Signal circuit between the ECT Sensor harness connector and the PCM C1 harness connector.

   Is the resistance below 5.0 Ohms?

   Yes

- Go To 5.

No

- Repair the (K2) ECT Sensor Signal circuit for an open or high resistance.
- Perform the POWERTRAIN VERIFICATION TEST - 6.7L. Refer to **POWERTRAIN VERIFICATION TEST - 6.7L** .

5. **CHECK THE (K914) SENSOR RETURN CIRCUIT FOR AN OPEN/HIGH RESISTANCE**

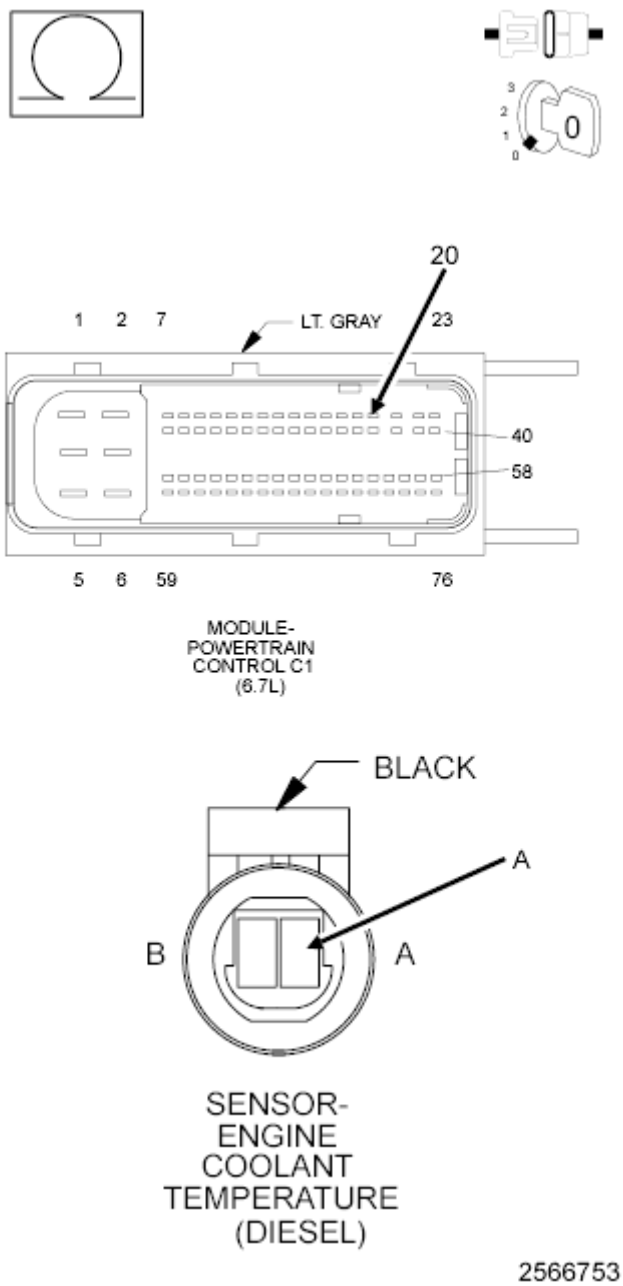

Fig. 56: Checking Sensor Return Circuit For Open Or High Resistance

1. Measure the resistance of the (K914) ECT Sensor Return circuit between the ECT Sensor harness connector and the PCM C1 harness connector.

   Is the resistance below 5.0 Ohms?

   Yes

   - Replace the Powertrain Control Module in accordance with the Service Information.
   - Perform the POWERTRAIN VERIFICATION TEST - 6.7L. Refer to **POWERTRAIN VERIFICATION TEST - 6.7L** .

   No

   - Repair the (K914) ECT Sensor Return circuit for an open or high resistance.
   - Perform the POWERTRAIN VERIFICATION TEST - 6.7L. Refer to **POWERTRAIN VERIFICATION TEST - 6.7L** .

P0128-THERMOSTAT RATIONALITY

For a complete wiring diagram, **refer to appropriate SYSTEM WIRING DIAGRAMS article** .

THEORY OF OPERATION

The thermostat rationality diagnostic runs during a drive cycle that starts with the coolant temperature below 140°F. This diagnostic looks at the how cold the system is at start up, what the inlet air temperature is, and the amount of fuel burned during that drive cycle. The PCM estimates what the coolant temperature should be. If the coolant temperature is not above a calibrated threshold, the rationality fails. The PCM assumes that the thermostat is stuck open.

WHEN MONITORED:

While the engine is running.

SET CONDITION:

The coolant temperature does not rise above a calibrated amount over a calibrated amount of time.

POSSIBLE CAUSES

Possible Causes
COOLANT LEVEL COOLANT TEMPERATURE SENSOR THERMOSTAT

Always perform the Pre-Diagnostic Troubleshooting procedure before proceeding. Refer to PRE-

DIAGNOSTIC TROUBLESHOOTING PROCEDURE - 6.7L .

DIAGNOSTIC TEST

1. **CHECK THE COOLANT LEVEL**

   NOTE: If DTC P0116 is also present, repair the P0116 DTC before proceeding with this test.

   NOTE: An engine block heater or oil heater can cause this DTC to set erroneously.

   1. Turn the ignition off.
   2. With the engine cold, verify the level of coolant in the cooling system.

      Is the cooling system full of coolant?

      Yes

      - Go To 2.

      No

      - Fill the cooling system to the proper level.
      - Perform the POWERTRAIN VERIFICATION TEST - 6.7L. Refer to **POWERTRAIN VERIFICATION TEST - 6.7L** .

2. **CHECK THE COOLANT TEMPERATURE SENSOR**
   1. Start the engine.
   2. With the scan tool, monitor the coolant temperature for 10 minutes.

      Did the coolant temperature change over time while the engine was running?

      Yes

      - Replace the Thermostat in accordance with the service information.
      - Perform the POWERTRAIN VERIFICATION TEST - 6.7L. Refer to **POWERTRAIN VERIFICATION TEST - 6.7L** .

      No

      - Replace the Coolant Temperature Sensor in accordance with the service information.
      - Perform the POWERTRAIN VERIFICATION TEST - 6.7L. Refer to **POWERTRAIN VERIFICATION TEST - 6.7L** .

P0169-WATER IN FUEL DETECTED FOR TOO LONG

For a complete wiring diagram, **refer to appropriate SYSTEM WIRING DIAGRAMS article** .

THEORY OF OPERATION

The Water-In-Fuel Sensor is attached to the bottom of the fuel filter. The Powertrain Control Module (PCM) provides a 5-Volt reference signal to the Water-In-Fuel Sensor. When the water collected in the fuel filter covers the sensor probes, the Water-In-Fuel Sensor then pulls the 5-Volt reference voltage to ground indicating high water accumulation in the fuel filter. The PCM illuminates the MIL lamp immediately after the diagnostic runs and fails. During this time water in fuel may cause white smoke, loss of power or hard starting. The MIL lamp will turn off after the diagnostic runs and passes in four consecutive drive cycles.

WHEN MONITORED:

While the engine is running.

SET CONDITION:

Water-In-Fuel light was on for a calibrated amount of time.

POSSIBLE CAUSES

Possible Causes
WATER IN FUEL

Always perform the Pre-Diagnostic Troubleshooting procedure before proceeding. Refer to PRE-DIAGNOSTIC TROUBLESHOOTING PROCEDURE - 6.7L .

DIAGNOSTIC TEST

1. **OTHER DTCS PRESENT**
    1. With the scan tool, read DTCs.

       Is P2269 displayed?

       Yes

       - Repair P2269 DTC first.
       - Perform the POWERTRAIN VERIFICATION TEST - 6.7L. Refer to **POWERTRAIN VERIFICATION TEST - 6.7L** .

       No

       - Drain water from the fuel filter.
       - Perform the POWERTRAIN VERIFICATION TEST - 6.7L. Refer to **POWERTRAIN VERIFICATION TEST - 6.7L** .

P0191-FUEL RAIL PRESSURE SENSOR CIRCUIT PERFORMANCE

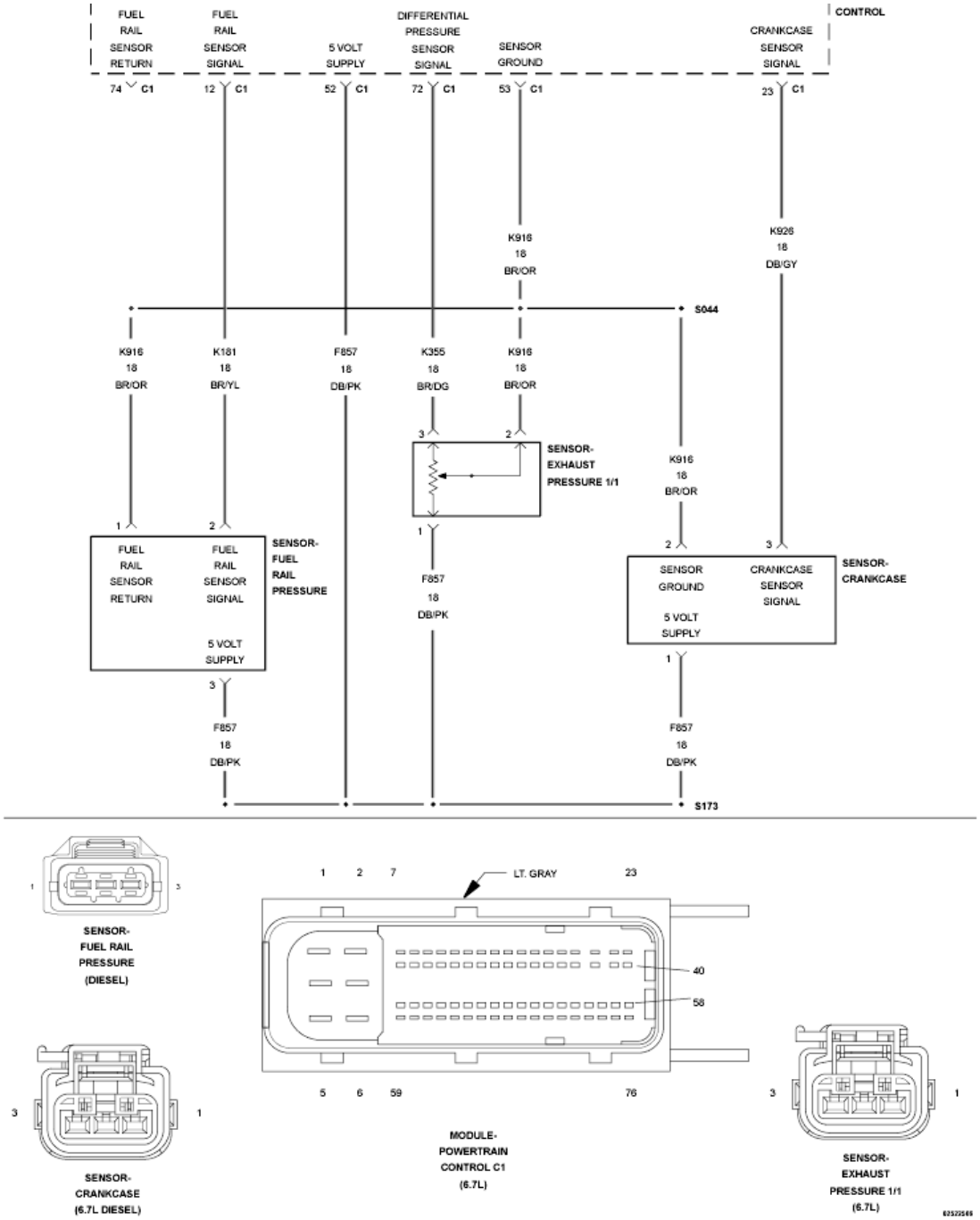

Fig. 57: Fuel Rail Pressure, Exhaust Pressure, & Crankcase Sensor Circuit Schematic
Courtesy of CHRYSLER GROUP, LLC

For a complete wiring diagram, **refer to appropriate SYSTEM WIRING DIAGRAMS article** .

THEORY OF OPERATION

This DTC is mapped to an idle diagnostic, and runs only at idle. The key-on error monitors fuel pressure voltage at key on after an eight hour cold soak. The Powertrain Control Module (PCM) varies fuel pressure and monitors the final fueling and engine speed to determine if the rate of change of fueling with respect to rate of

change of pressure is with in the normal operation limits of the pressure sensor. The engine must be at operating temperature and must not be in an active aftertreatment regeneration mode in order to run this diagnostic. The idle monitor runs once per drive cycle and the PCM will light the MIL lamp after the diagnostic runs and fails in two consecutive drive cycles. The PCM will turn off the MIL lamp after the diagnostic runs and passes in four consecutive drive cycles.

WHEN MONITORED:

Engine running at idle.

SET CONDITION:

At idle, the rate of change in fueling with respect to the rate of change of pressure is below the calibrated fail high threshold or above the calibrated fail low threshold while the monitor was running.

POSSIBLE CAUSES

Possible Causes
FUEL RAIL PRESSURE SENSOR
INJECTOR LEAKAGE

Always perform the Pre-Diagnostic Troubleshooting procedure before proceeding. Refer to PRE-DIAGNOSTIC TROUBLESHOOTING PROCEDURE - 6.7L .

DIAGNOSTIC TEST

1. **ACTIVE DTC**

NOTE: **If there are any other EGR, Turbocharger, or Intake system DTCs present, repair those DTCs before proceeding.**

1. Turn the ignition on.
2. With the scan tool, record all Freeze frame data.
3. With the scan tool, erase DTCs.
4. Turn the ignition off for 75 seconds.
5. Start the engine and let it idle for up to one minute.
6. With the scan tool, read DTCs.

Did the DTC reset?

Yes

- Go To 2.

No

- Perform the INTERMITTENT CONDITION - 6.7L diagnostic procedure. Refer to **INTERMITTENT CONDITION - 6.7L** .

2. **FUEL RAIL PRESSURE SENSOR**
    1. With the scan tool, monitor the actual fuel pressure reading while the ignition is on and engine is not running.

       Is the actual fuel pressure reading above 870 psi?

       Yes

       - Go To 3.

       No

       - Go To 4.
3. **VISUALLY INSPECT THE FUEL RAIL PRESSURE SENSOR**
    1. Visually inspect the fuel system components for signs of tampering, pay particular attention to the Fuel Pressure Sensor on the fuel rail and the Fuel Pressure Sensor wiring harness.

       Were any signs of tampering discovered?

       Yes

       - Replace the Fuel Pressure Sensor in accordance with the service information.
       - Perform the POWERTRAIN VERIFICATION TEST - 6.7L. Refer to **POWERTRAIN VERIFICATION TEST - 6.7L** .

       No

       - Go To 4.
4. **CHECK THE INJECTOR RETURN FLOW**
    1. Perform the INJECTOR RETURN FLOW TEST. Refer to **DIAGNOSIS AND TESTING, 6.7L** .

       Does the injector drainage meet the test specification?

       Yes

       - Replace the Fuel Pressure Sensor in accordance with the service information.
       - Perform the POWERTRAIN VERIFICATION TEST - 6.7L. Refer to **POWERTRAIN VERIFICATION TEST - 6.7L** .

       No

       - Repair cause of high Fuel Injector leakage.
       - Perform the POWERTRAIN VERIFICATION TEST - 6.7L. Refer to **POWERTRAIN**

VERIFICATION TEST - 6.7L .

P0192-FUEL PRESSURE SENSOR LOW

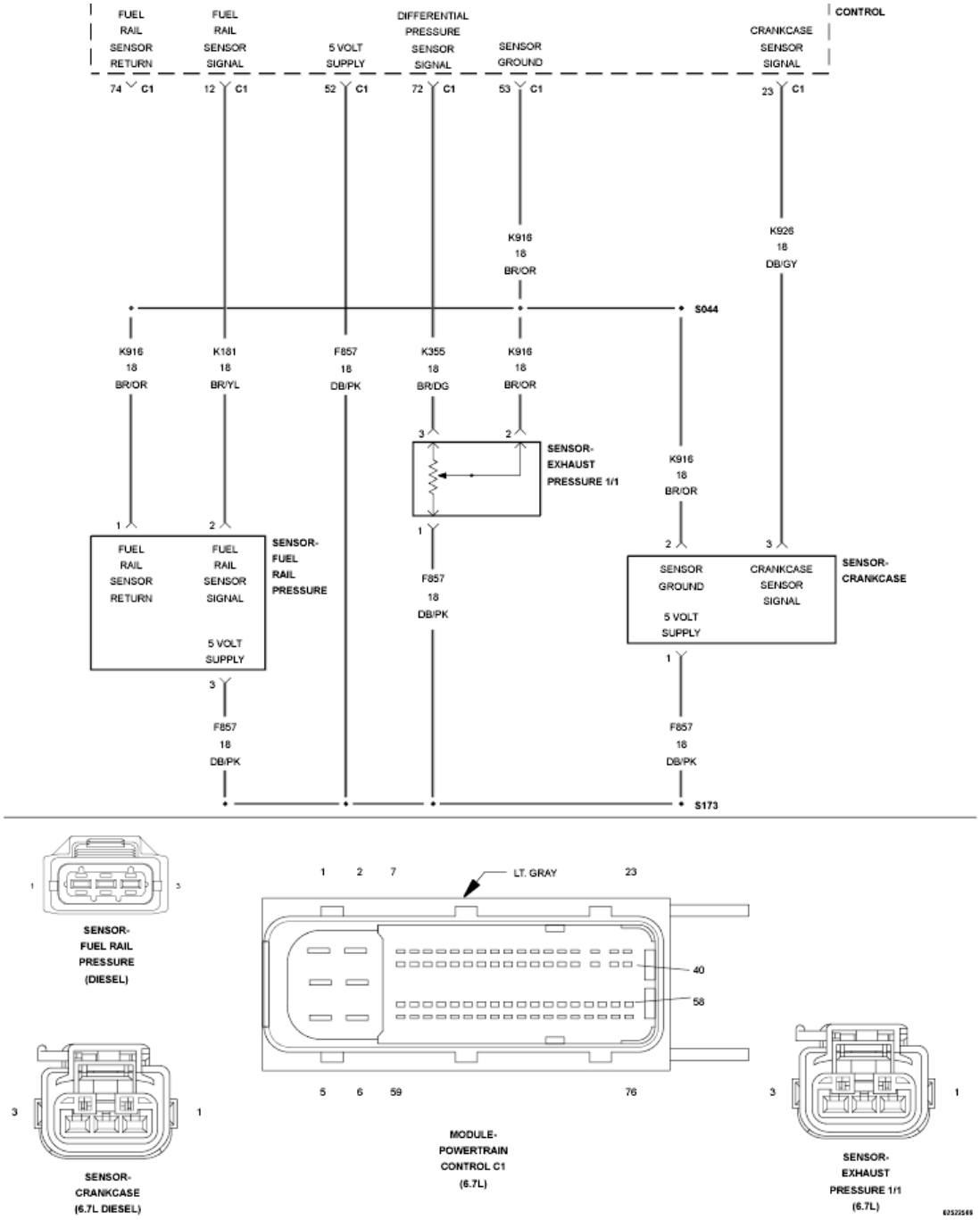

Fig. 58: Fuel Rail Pressure, Exhaust Pressure, & Crankcase Sensor Circuit Schematic
Courtesy of CHRYSLER GROUP, LLC

For a complete wiring diagram, **refer to appropriate SYSTEM WIRING DIAGRAMS article** .

THEORY OF OPERATION

The Powertrain Control Module (PCM) provides the Fuel Rail Pressure Sensor with a 5-Volt supply and sensor ground, and receives a signal voltage back from the Fuel Rail Pressure Sensor. This sensor signal voltage changes based on the pressure in the fuel rail. The PCM will light the MIL lamp immediately after the diagnostic runs and fails. During this time the customer may experience a power and or speed derate. The PCM will turn off the MIL light after the diagnostic runs and passes in four consecutive drive cycles.

WHEN MONITORED:

With the ignition on and battery voltage greater than 10.4 Volts.

SET CONDITION:

The circuit voltage to the Powertrain Control Module (PCM) falls below 0.25 of a Volt for five seconds.

POSSIBLE CAUSES

Possible Causes
(K181) FUEL RAIL PRESSURE SENSOR SIGNAL CIRCUIT SHORTED TO GROUND
(K181) FUEL RAIL PRESSURE SENSOR SIGNAL CIRCUIT SHORTED TO THE (K916) SENSOR GROUND
(K916) SENSOR GROUND CIRCUIT OPEN/HIGH RESISTANCE
(F857) 5-VOLT SUPPLY CIRCUIT SHORTED TO GROUND
FUEL PRESSURE SENSOR
POWERTRAIN CONTROL MODULE (PCM)

Always perform the Pre-Diagnostic Troubleshooting procedure before proceeding. Refer to PRE-DIAGNOSTIC TROUBLESHOOTING PROCEDURE - 6.7L .

DIAGNOSTIC TEST

1. **ACTIVE DTC**

   NOTE: If a 5-Volt reference DTC is present, repair that DTC before proceeding with this test.

   1. Turn the ignition on.
   2. With the scan tool, record all Freeze frame data.
   3. With the scan tool, erase DTCs.
   4. Turn the ignition off for 75 seconds.
   5. Turn the ignition on.
   6. With the scan tool, read DTCs.

   Did the DTC reset?

   Yes

- Go To 2.

No

- Perform the INTERMITTENT CONDITION - 6.7L diagnostic procedure. Refer to **INTERMITTENT CONDITION - 6.7L** .

2. **CHECK THE FUEL PRESSURE SENSOR**
   1. Turn the ignition off.
   2. Disconnect the Fuel Pressure Sensor harness connector.
   3. Turn the ignition on.

   Does the DTC P0193 set?

   Yes

   - Replace the Fuel Pressure Sensor in accordance with the service information.
   - Perform the POWERTRAIN VERIFICATION TEST - 6.7L. Refer to **POWERTRAIN VERIFICATION TEST - 6.7L** .

   No

   - Go To 3.

3. **CHECK THE (K181) FUEL RAIL PRESSURE SENSOR SIGNAL CIRCUIT FOR A SHORT TO GROUND**

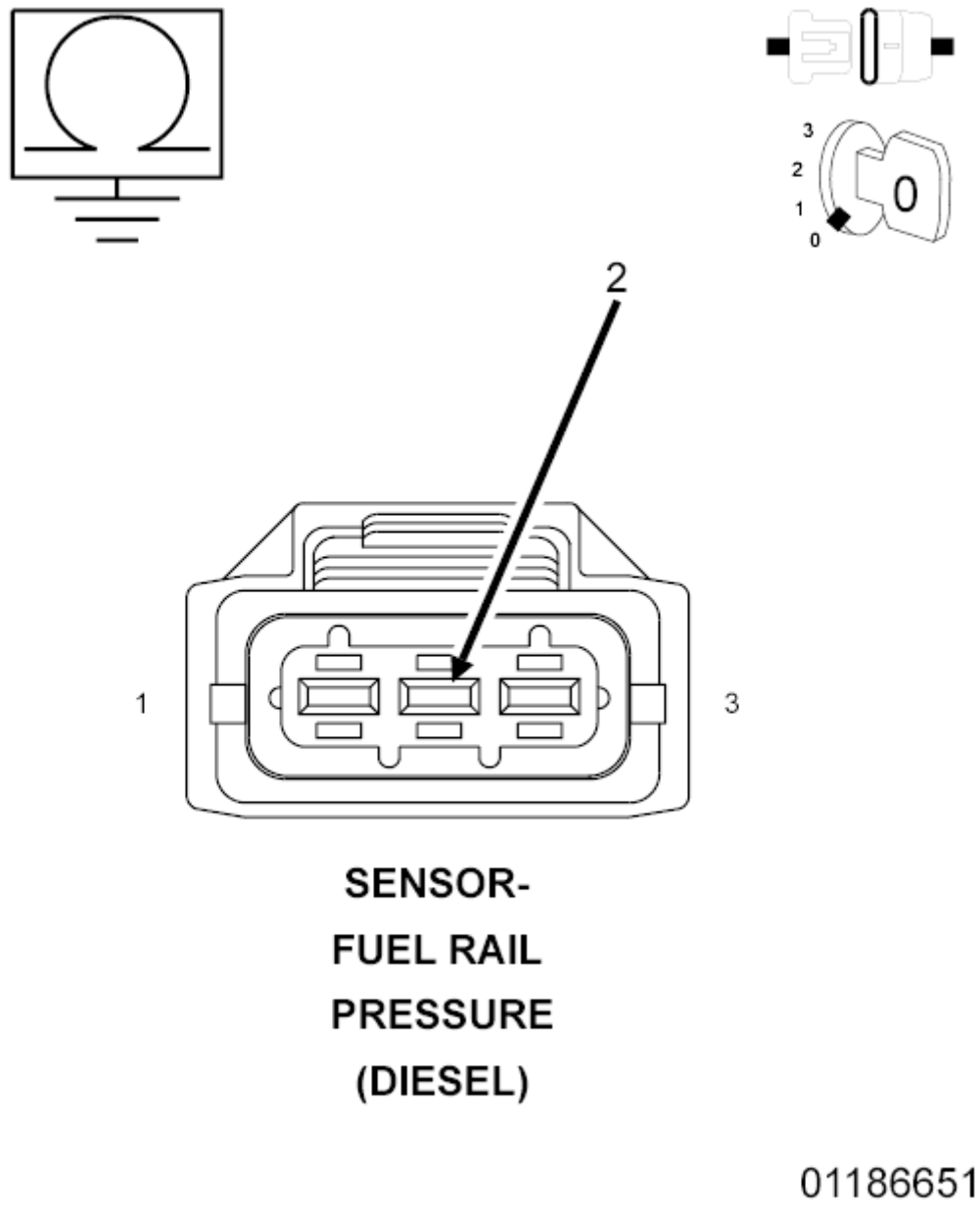

Fig. 59: Checking Fuel Rail Pressure Sensor Signal Circuit For Short To Ground
Courtesy of CHRYSLER GROUP, LLC

1. Turn the ignition off.
2. Disconnect the PCM C1 harness connector.

NOTE: Check connectors - Clean/repair as necessary.

3. Measure the resistance between ground and the (K181) Fuel Pressure Sensor Signal circuit in the Fuel Pressure Sensor harness connector.

   Is the resistance below 10k Ohms?

Yes

- Repair the (K181) Fuel Pressure Sensor Signal circuit for a short to ground.
- Perform the POWERTRAIN VERIFICATION TEST - 6.7L. Refer to **POWERTRAIN VERIFICATION TEST - 6.7L** .

No

- Go To 4.

4. **CHECK FOR THE (K181) FUEL RAIL PRESSURE SENSOR SIGNAL CIRCUIT SHORTED TO THE (K916) SENSOR GROUND**

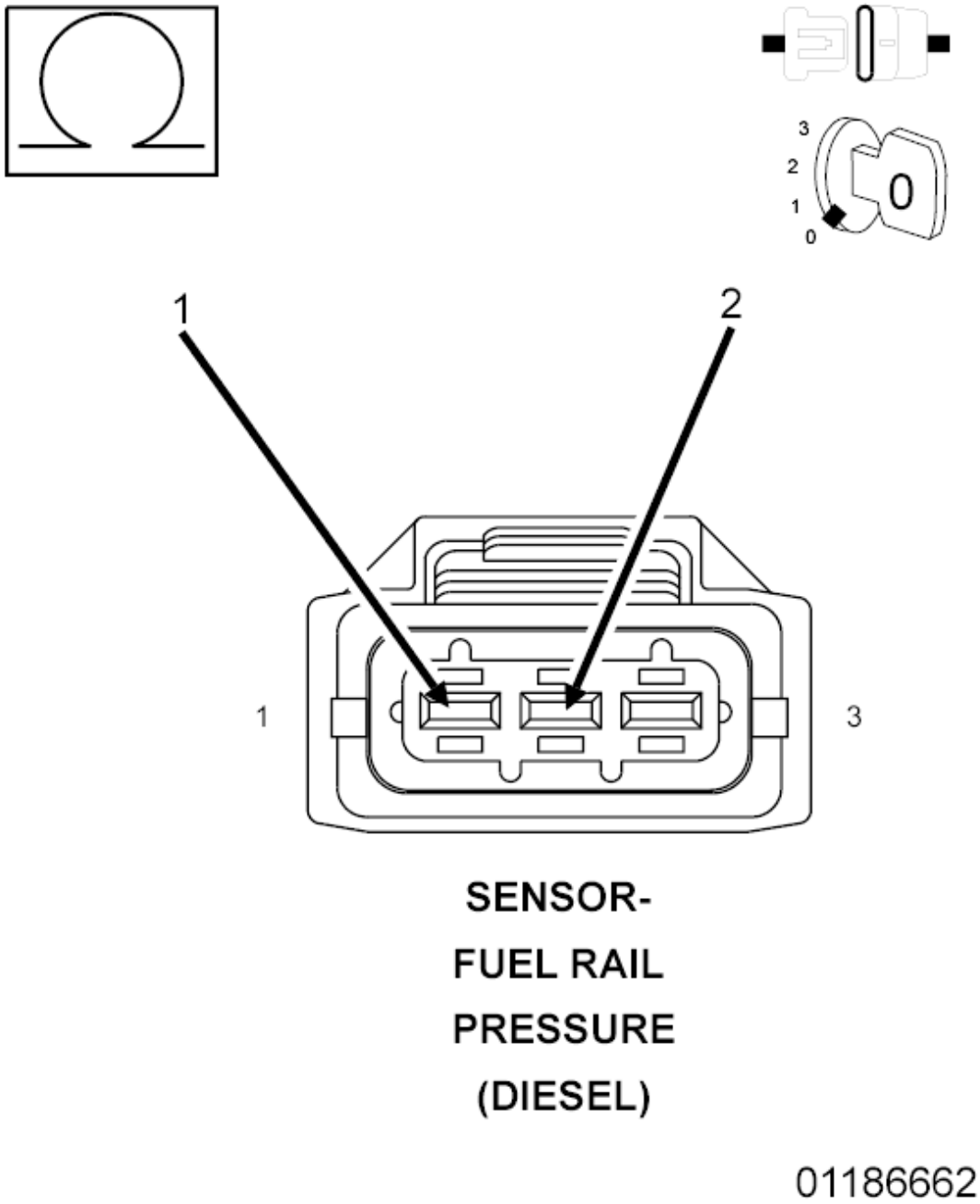

Fig. 60: Checking Fuel Rail Pressure Sensor Signal Circuit For Short To Sensor Ground
Courtesy of CHRYSLER GROUP, LLC

1. Measure the resistance between the (K181) Fuel Pressure Sensor Signal circuit and (K916) Sensor Ground circuit at the Fuel Pressure Sensor harness connector.

   Is the resistance below 10k Ohms?

   Yes

- Repair the short between the (K181) Fuel Pressure Sensor Signal circuit and (K916) Sensor Ground circuit.
- Perform the POWERTRAIN VERIFICATION TEST - 6.7L. Refer to **POWERTRAIN VERIFICATION TEST - 6.7L** .

No

- Go To 5.

5. **CHECK THE (K916) SENSOR GROUND CIRCUIT FOR AN OPEN/HIGH RESISTANCE**

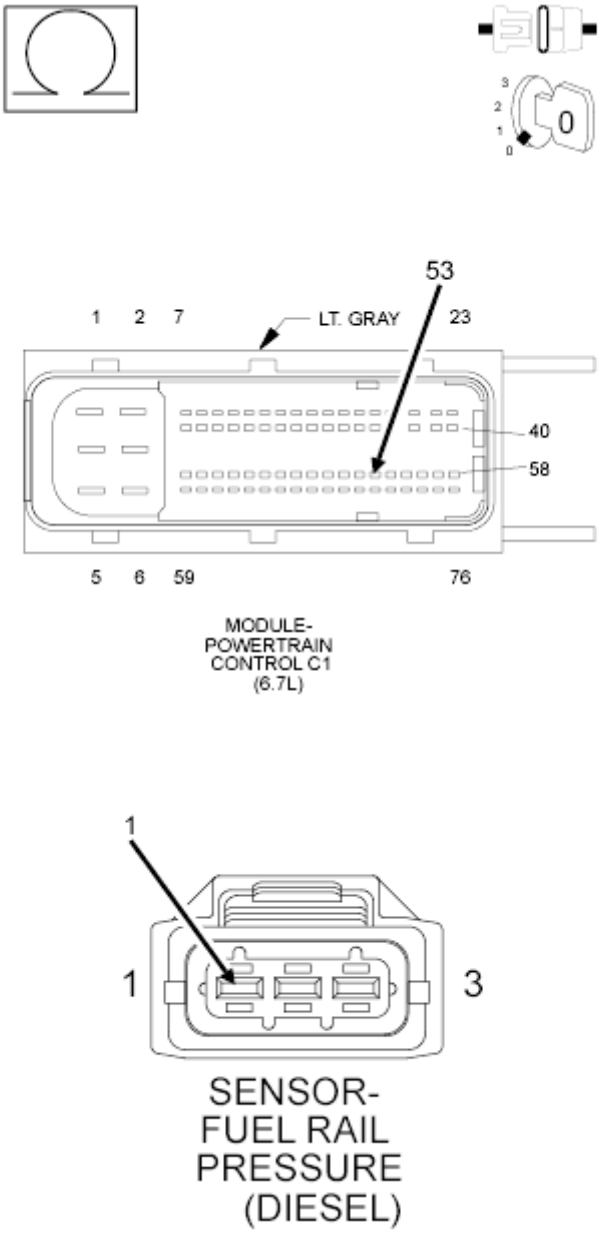

Fig. 61: Checking Sensor Ground Circuit For Open Or High Resistance
Courtesy of CHRYSLER GROUP, LLC

1. Measure the resistance of the (K916) Sensor Ground circuit between the Fuel Pressure Sensor harness connector and the PCM C1 harness connector.

   Is the resistance below 5.0 Ohms?

   Yes

   - Replace the Powertrain Control Module in accordance with the service information.
   - Perform the POWERTRAIN VERIFICATION TEST - 6.7L. Refer to **POWERTRAIN VERIFICATION TEST - 6.7L** .

   No

   - Repair the (K916) Sensor Ground circuit for an open circuit or high resistance.
   - Perform the POWERTRAIN VERIFICATION TEST - 6.7L. Refer to **POWERTRAIN VERIFICATION TEST - 6.7L** .

P0193-FUEL PRESSURE SENSOR HIGH

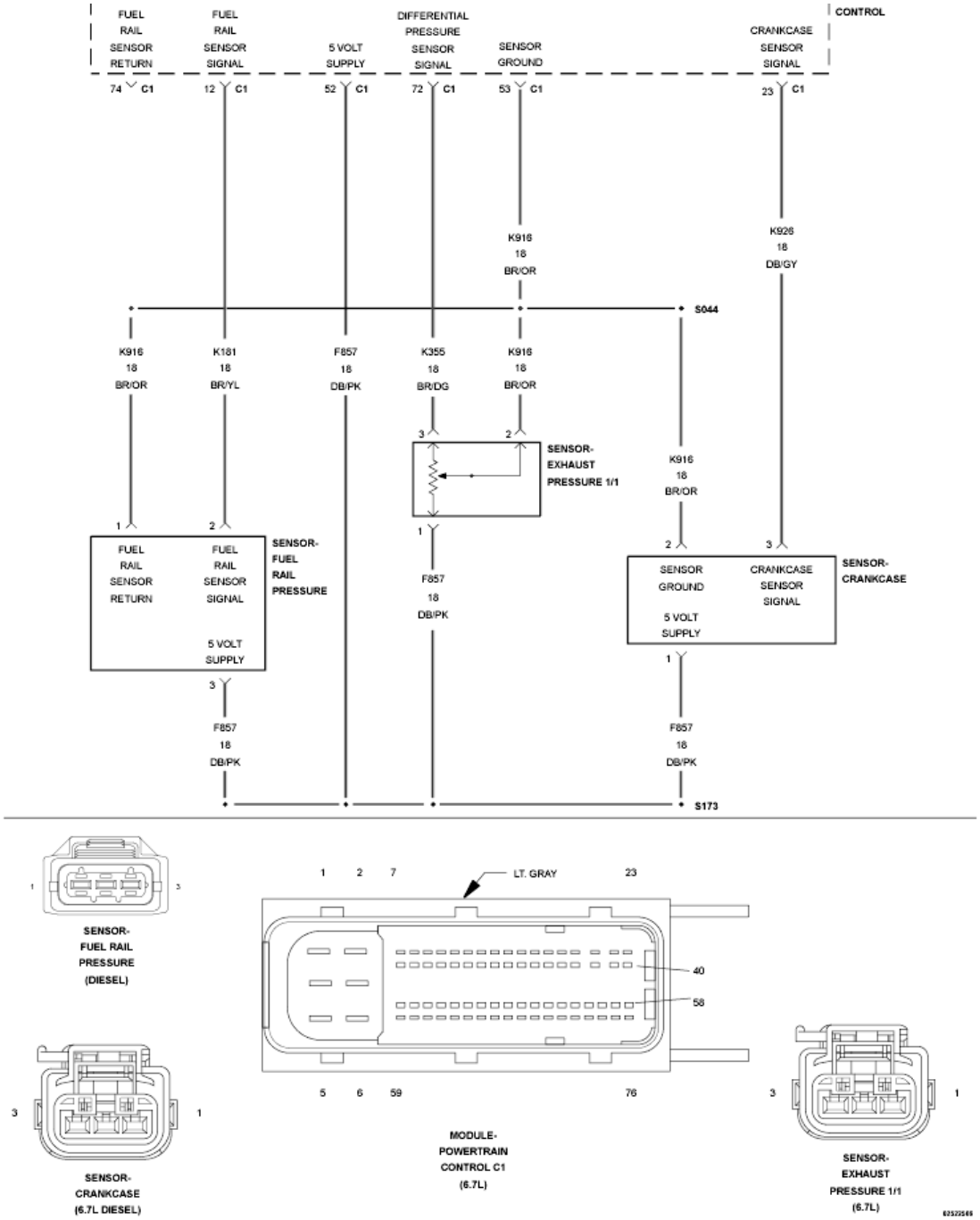

Fig. 62: Fuel Rail Pressure, Exhaust Pressure, & Crankcase Sensor Circuit Schematic
Courtesy of CHRYSLER GROUP, LLC

For a complete wiring diagram, **refer to appropriate SYSTEM WIRING DIAGRAMS article** .

THEORY OF OPERATION

The Powertrain Control Module (PCM) provides a 5-Volt supply to the Fuel Rail Pressure Sensor (RPS). The PCM also provides a ground on the sensor return circuit. The Fuel Rail Pressure Sensor provides a signal to the PCM on the Fuel Rail Pressure Sensor Signal circuit. This sensor signal voltage changes based on the pressure

in the fuel rail. The PCM will detect a low signal voltage at low rail pressures. The PCM will detect a high signal voltage during high rail pressure conditions. The PCM will light the MIL lamp immediately after the diagnostic runs and fails. During this time the customer may experience a power and or speed derate. The PCM will turn off the MIL light after the diagnostic runs and passes in four consecutive drive cycles.

WHEN MONITORED:

With the ignition on and battery voltage greater than 10.4 Volts.

SET CONDITION:

The circuit voltage to the Powertrain Control Module (PCM) is above a calibrated threshold for a certain period of time.

POSSIBLE CAUSES

Possible Causes
(F857) 5-VOLT SUPPLY CIRCUIT SHORTED TO VOLTAGE
(K181) FPS SIGNAL CIRCUIT SHORTED TO VOLTAGE
(K181) FPS SIGNAL CIRCUIT OPEN/HIGH RESISTANCE
(K181) FPS SIGNAL CIRCUIT SHORTED TO THE (F855) 5-VOLT SUPPLY CIRCUIT
(K916) SENSOR GROUND OPEN/HIGH RESISTANCE
FUEL PRESSURE SENSOR
POWERTRAIN CONTROL MODULE (PCM)

Always perform the Pre-Diagnostic Troubleshooting procedure before proceeding. Refer to PRE-DIAGNOSTIC TROUBLESHOOTING PROCEDURE - 6.7L .

DIAGNOSTIC TEST

1. **ACTIVE DTC**

NOTE: **If there are any 5-Volt supply DTCs present, repair those DTCs before proceeding.**

1. Turn the ignition on.
2. With the scan tool, record all Freeze frame data.
3. With the scan tool, erase DTCs.
4. Turn the ignition off for 75 seconds.
5. Turn the ignition on.
6. With the scan tool, read DTCs.

Did the DTC reset?

Yes

- Go To 2.

No

- Perform the INTERMITTENT CONDITION - 6.7L diagnostic procedure. Refer to **INTERMITTENT CONDITION - 6.7L** .

2. **CHECK THE (K181) SIGNAL CIRCUIT FOR A SHORT TO VOLTAGE**

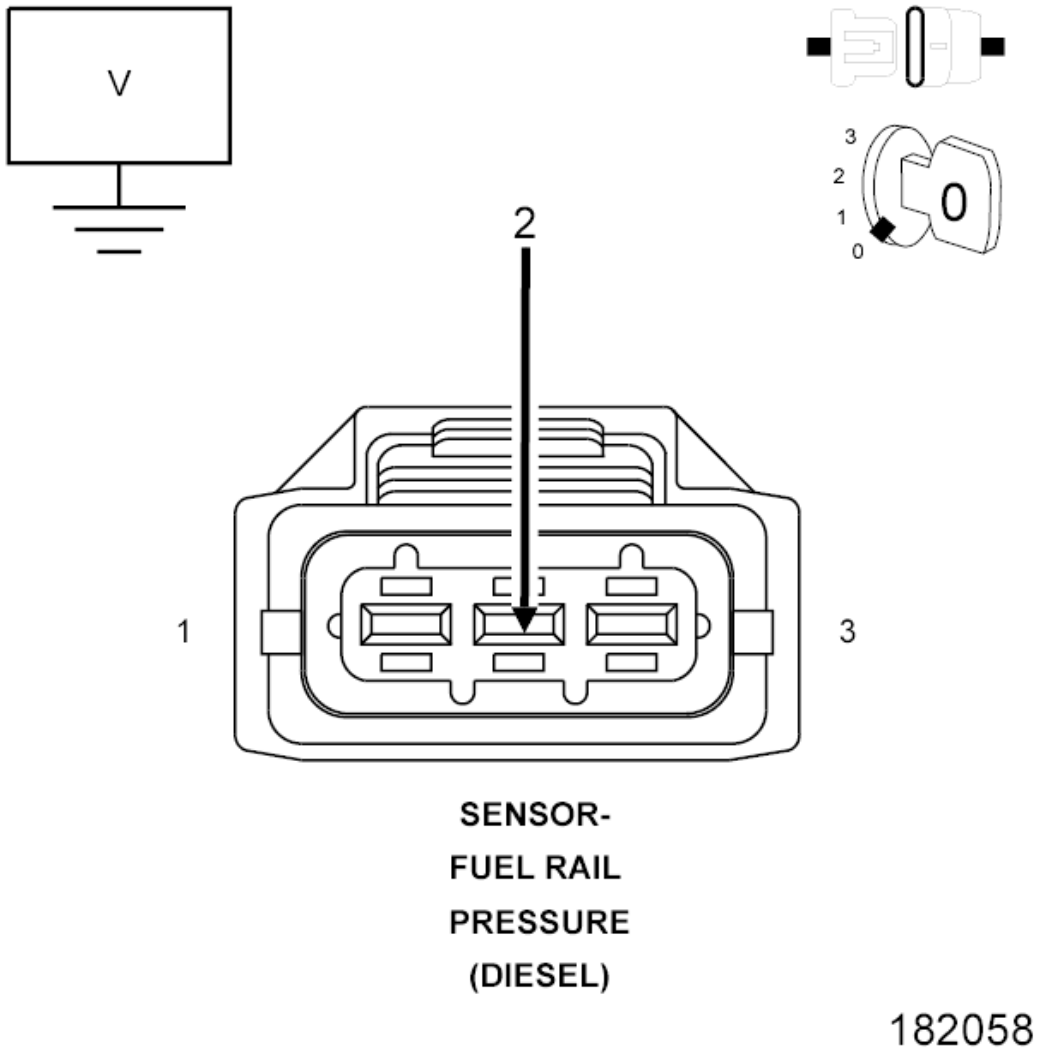

Fig. 63: Identifying Fuel Rail Pressure Sensor Harness Connector Terminals
Courtesy of CHRYSLER GROUP, LLC

1. Turn the ignition off.
2. Disconnect the Fuel Pressure Sensor harness connector.
3. Turn the ignition on.
4. Measure the voltage of the (K181) FPS Signal circuit at the Fuel Pressure Sensor harness

connector.

Is the reading above 5.2 volts?

Yes

- Repair the (K181) FPS Signal circuit for a short to voltage.
- Perform the POWERTRAIN VERIFICATION TEST - 6.7L. Refer to **POWERTRAIN VERIFICATION TEST - 6.7L** .

No

- Go To 3.

3. **CHECK FOR THE (K181) SIGNAL CIRCUIT SHORTED TO THE (F857) 5-VOLT SUPPLY CIRCUIT**

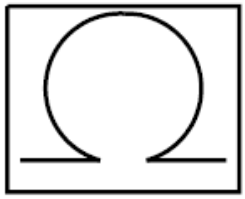

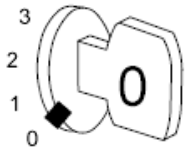

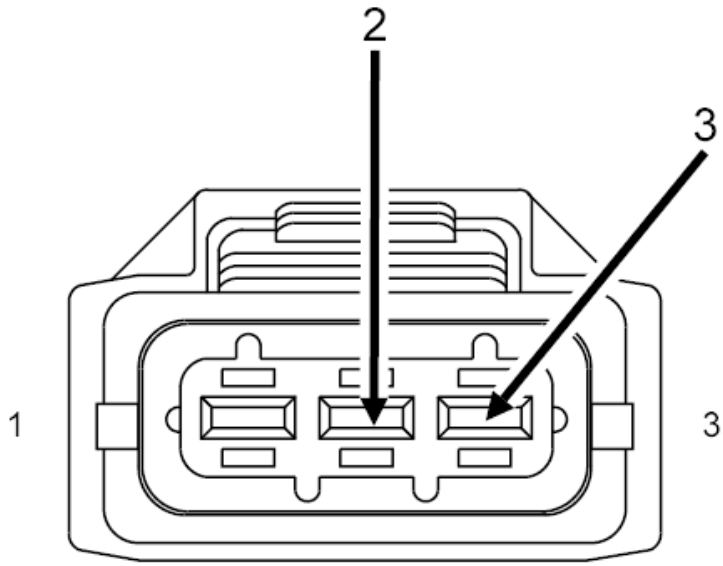

SENSOR-
FUEL RAIL
PRESSURE
(DIESEL)

182062

Fig. 64: Checking FPS Signal Circuit Shorted To 5-Volt Supply Circuit
Courtesy of CHRYSLER GROUP, LLC

1. Turn the ignition off.
2. Disconnected PCM C1 harness connector.
3. Measure the resistance between the (K181) FPS Signal circuit and the (F857) 5-Volt Supply circuit at the Fuel Pressure Sensor harness connector.

   Is the resistance below 10k Ohms?

   Yes

   - Repair the short between the (K181) FPS Signal circuit and the (F857) 5-Volt Supply circuit.
   - Perform the POWERTRAIN VERIFICATION TEST - 6.7L. Refer to **POWERTRAIN VERIFICATION TEST - 6.7L** .

   No

   - Go To 4.

4. **CHECK THE (K181) SIGNAL CIRCUIT FOR AN OPEN/HIGH RESISTANCE**

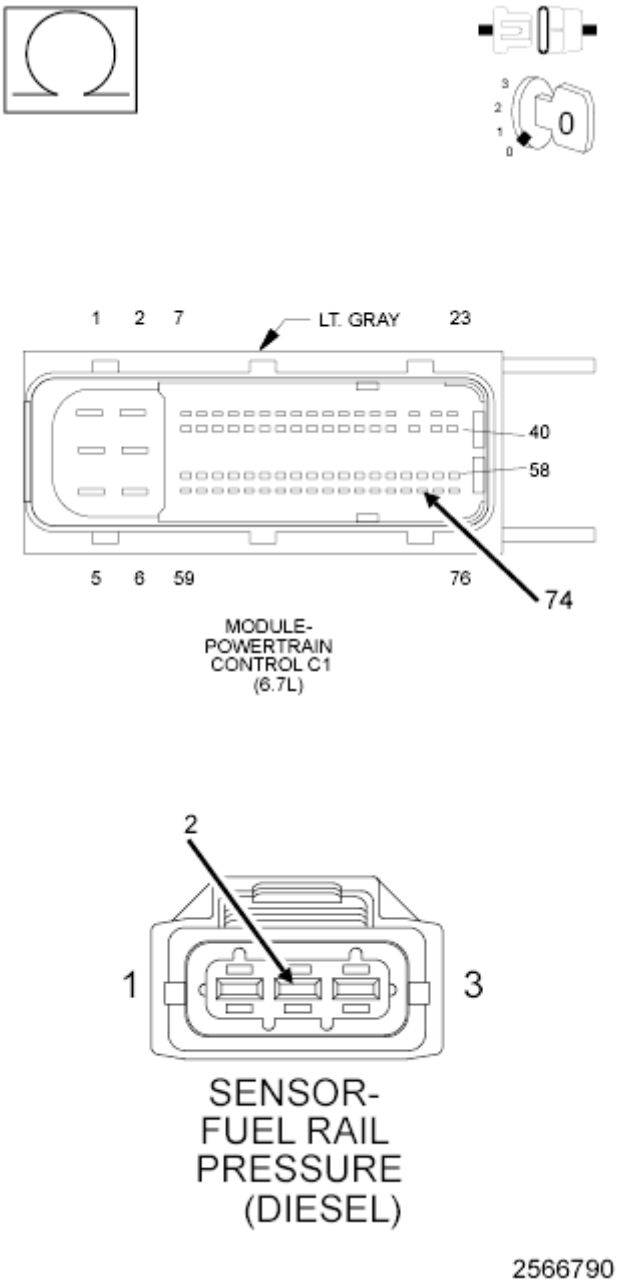

Fig. 65: Checking Signal Circuit For Open Or High Resistance
Courtesy of CHRYSLER GROUP, LLC

1. Measure the resistance of the (K181) FPS Signal circuit between the Fuel Pressure Sensor harness connector and the PCM C1 harness connector.

   Is the resistance below 5.0 Ohms?

   Yes

   - Go To 5.

No

- Repair the (K181) FPS Signal circuit for an open or high resistance.
- Perform the POWERTRAIN VERIFICATION TEST - 6.7L. Refer to **POWERTRAIN VERIFICATION TEST - 6.7L** .

5. **CHECK THE (K916) SENSOR GROUND FOR AN OPEN/HIGH RESISTANCE**

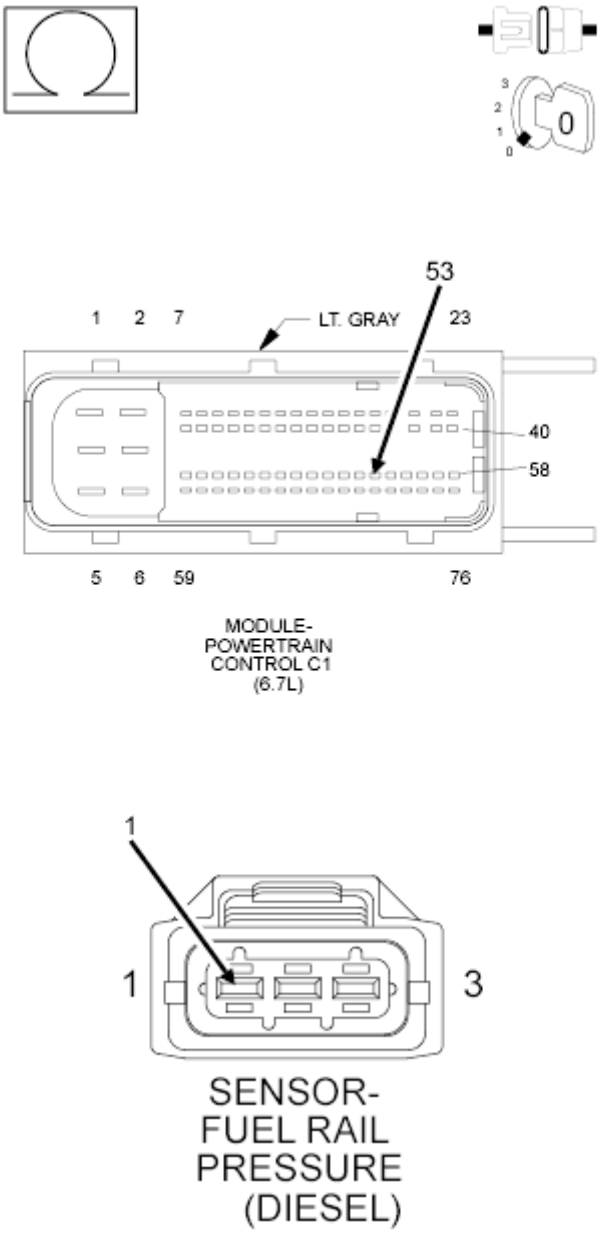

Fig. 66: Checking Sensor Ground Circuit For Open Or High Resistance
Courtesy of CHRYSLER GROUP, LLC

1. Measure the resistance of the (K916) Sensor Ground circuit between the Fuel Pressure Sensor harness connector and the PCM C1 harness connector.

Is the resistance below 5.0 Ohms?

Yes

- Go To 6.

No

- Repair the (K916) Sensor Ground circuit for an open or high resistance.
- Perform the POWERTRAIN VERIFICATION TEST - 6.7L. Refer to **POWERTRAIN VERIFICATION TEST - 6.7L** .

6. **CHECK THE FUEL PRESSURE SENSOR**

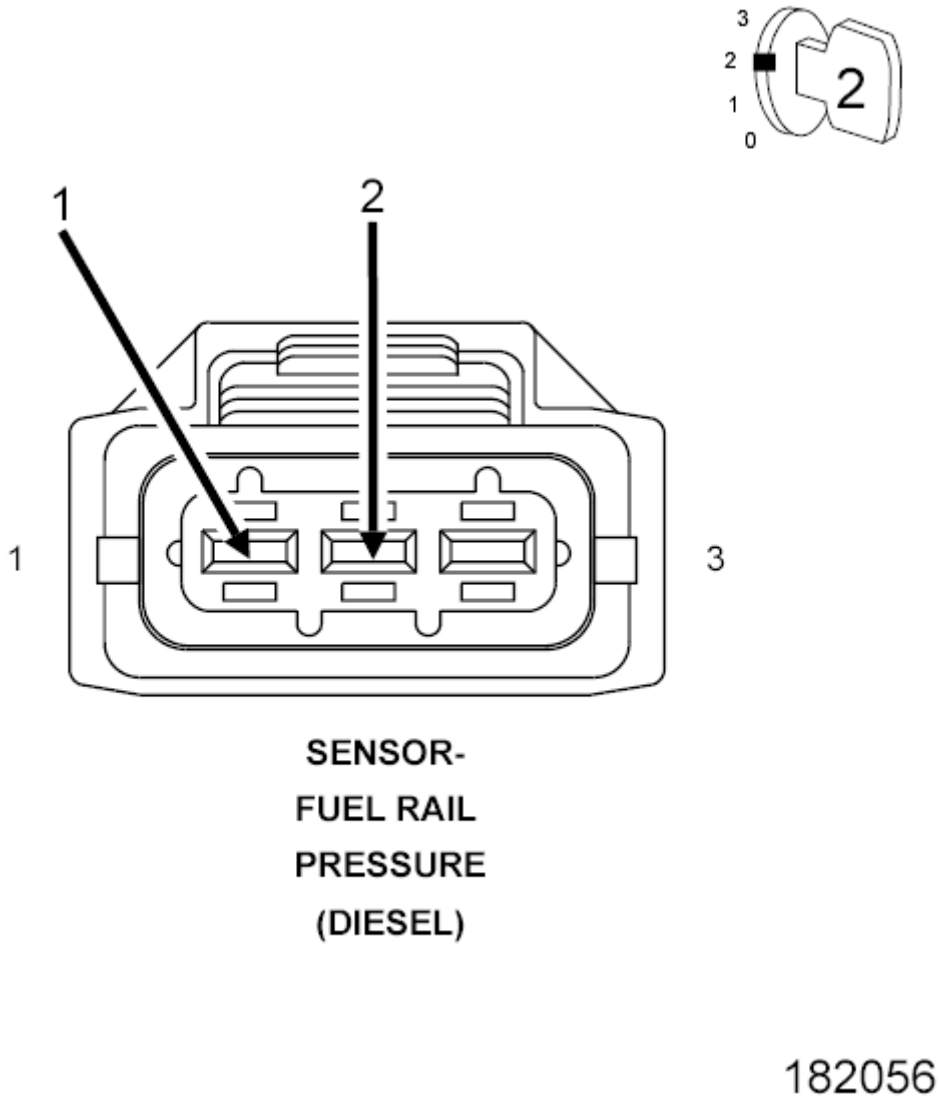

Fig. 67: Identifying Fuel Rail Pressure Sensor Harness Connector Terminals
Courtesy of CHRYSLER GROUP, LLC

1. Turn the ignition off.
2. Reconnect the PCM C1 harness connector.
3. Reconnect the Fuel Pressure Sensor harness connector.
4. Turn the ignition on.
5. With the scan tool, erase DTCs.
6. While monitoring scan tool, connect a jumper between the (K181) FPS Signal circuit and the (K916) Sensor Ground circuit at the Fuel Pressure Sensor harness connector.

   Does the DTC P0192 set?

   Yes

   - Replace the Fuel Pressure Sensor in accordance with the service information.
   - Perform the POWERTRAIN VERIFICATION TEST - 6.7L. Refer to **POWERTRAIN VERIFICATION TEST - 6.7L** .

   No

   - Replace and program the Powertrain Control Module in accordance with the service information.
   - Perform the POWERTRAIN VERIFICATION TEST - 6.7L. Refer to **POWERTRAIN VERIFICATION TEST - 6.7L** .

P0201-FUEL INJECTOR 1 CIRCUIT/OPEN

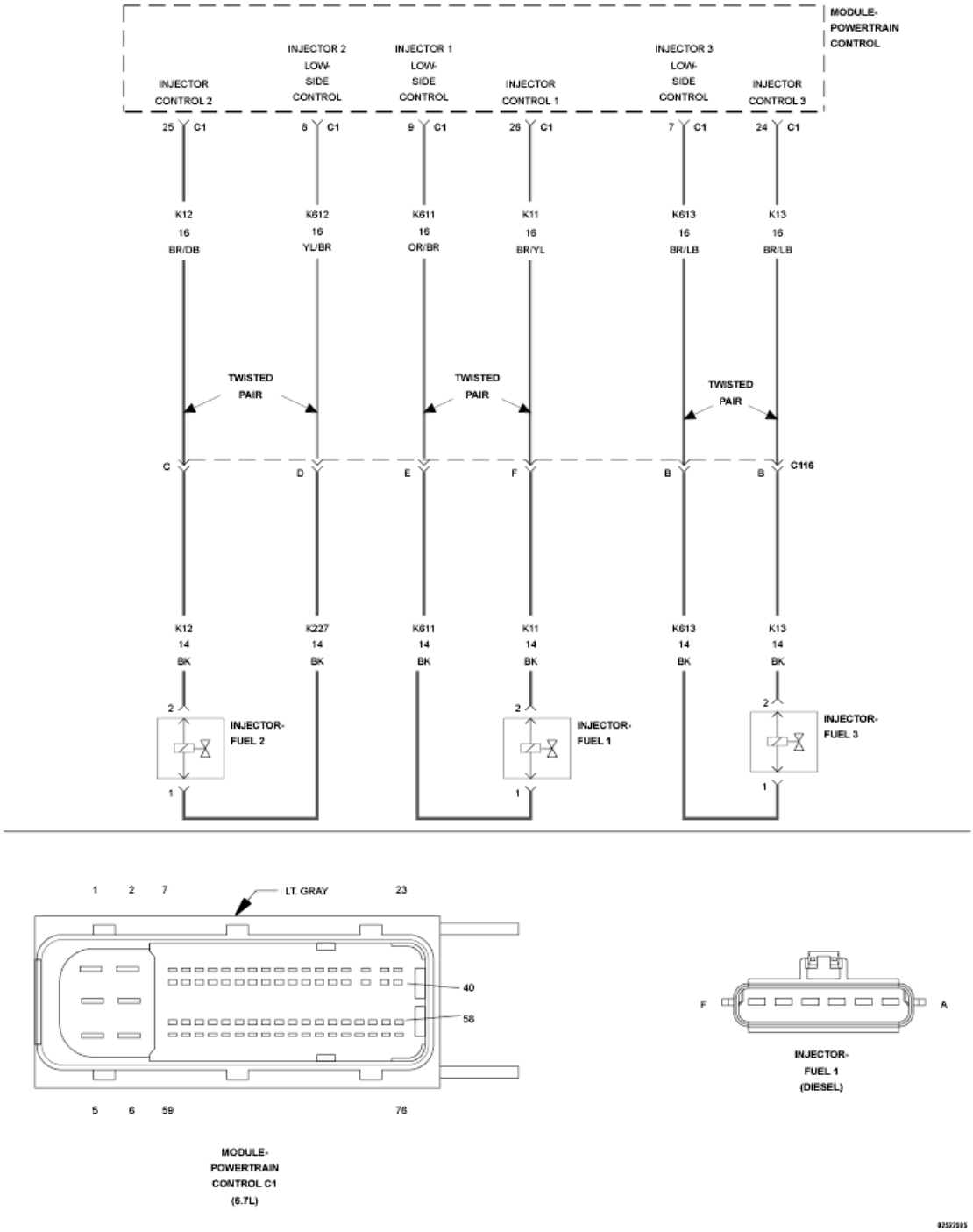

Fig. 68: Fuel Injector Circuit Schematic
Courtesy of CHRYSLER GROUP, LLC

For a complete wiring diagram, **refer to appropriate SYSTEM WIRING DIAGRAMS article** .

THEORY OF OPERATION

The Powertrain Control Module (PCM) actuates the solenoid in the Fuel Injector causing the needle valve to rise and fuel flows through the spray holes in the nozzle tip into the combustion chamber. The PCM has a

common internal driver circuit to all three Fuel Injectors on each bank. If any injector circuit on a given bank has a failure, a DTC will be set for all three Fuel Injectors on that bank. Fuel Injectors 1, 2, 3 are grouped together on bank 1. Fuel Injectors 4, 5, 6 are grouped together on bank 2. The MIL lamp will light immediately after the diagnostic runs and fails. During this time the customer may experience engine surge or stumble. The MIL lamp will turn off once the diagnostic runs and passes in four consecutive drive cycles.

WHEN MONITORED:

While the engine is running.

SET CONDITION:

When the Fuel Injector current falls below a calibrated threshold.

POSSIBLE CAUSES

Possible Causes
HIGH SIDE DRIVER CIRCUIT OPEN/HIGH RESISTANCE LOW SIDE DRIVER CIRCUIT OPEN/HIGH RESISTANCE HIGH SIDE DRIVER CIRCUIT SHORTED TO GROUND LOW SIDE DRIVER CIRCUIT SHORTED TO GROUND HIGH SIDE DRIVER CIRCUIT SHORTED TO VOLTAGE
LOW SIDE DRIVER CIRCUIT SHORTED TO VOLTAGE
DRIVER CIRCUITS SHORTED TOGETHER
FUEL INJECTOR
POWERTRAIN CONTROL MODULE (PCM)

Always perform the Pre-Diagnostic Troubleshooting procedure before proceeding. Refer to PRE-DIAGNOSTIC TROUBLESHOOTING PROCEDURE - 6.7L .

DIAGNOSTIC TEST

1. **ACTIVE DTC**
    1. Ignition on, engine not running.
    2. With the scan tool check for active DTCs.

       Is the DTC active?

       Yes

       - Go To 2.

       No

       - Perform the INTERMITTENT CONDITION - 6.7L diagnostic procedure. Refer to **INTERMITTENT CONDITION - 6.7L** .

2. **CHECK EACH FUEL INJECTOR CIRCUIT FOR AN OPEN/HIGH RESISTANCE**
    1. Turn the ignition off.
    2. Disconnect the PCM C1 harness connector.
    3. Measure the resistance between the:
        - (K11) Fuel Injector 1 High Side Driver circuit and the (K611) Fuel Injector 1 Low Side Driver circuit at the PCM C1 harness connector.
        - (K12) Fuel Injector 2 High Side Driver circuit and the (K612) Fuel Injector 2 Low Side Driver circuit at the PCM C1 harness connector.
        - (K13) Fuel Injector 3 High Side Driver circuit and the (K613) Fuel Injector 3 Low Side Driver circuit at the PCM C1 harness connector.

    NOTE: Be sure to zero out the Ohm meter prior to checking the Fuel Injector circuit. Resistance reading should be between 0-1 Ohm.

    Is the resistance between 0-1 Ohm for each Fuel Injector circuit?

    Yes

    - Go To 3.

    No

    - Go To 8.
3. **CHECK EACH FUEL INJECTOR CIRCUIT FOR A SHORT TO GROUND**
    1. Measure the resistance between ground and the:
        - (K11) Fuel Injector 1 High Side Driver circuit at the PCM C1 harness connector.
        - (K12) Fuel Injector 2 High Side Driver circuit at the PCM C1 harness connector.
        - (K13) Fuel Injector 3 High Side Driver circuit at the PCM C1 harness connector.

    NOTE: There should be no continuity between the circuit and ground.

    Is the resistance below 10k Ohms on all circuits?

    Yes

    - Go To 12.

    No

    - Go To 4.
4. **CHECK EACH FUEL INJECTOR CIRCUIT FOR A SHORT TO VOLTAGE**
    1. Turn the ignition on.
    2. Measure the voltage on the:

- (K11) Fuel Injector 1 High Side Driver circuit at the PCM C1 harness connector.
- (K12) Fuel Injector 2 High Side Driver circuit at the PCM C1 harness connector.
- (K13) Fuel Injector 3 High Side Driver circuit at the PCM C1 harness connector.

NOTE: There should be no voltage present.

Is there voltage present on any circuit?

Yes

- Go To 6.

No

- Go To 5.

5. **CHECKING FOR DRIVER CIRCUITS SHORTED TOGETHER**
   1. Turn ignition off.
   2. Disconnect all bank 1 Fuel Injector wires at the Fuel Injectors.
   3. Measure the resistance between all bank 1 Driver circuits at the PCM C1 harness connector.

   Is the resistance below 10k Ohms between any Driver circuits?

   Yes

   - Repair the Driver circuits that are shorted together.
   - Perform the POWERTRAIN VERIFICATION TEST - 6.7L. Refer to **POWERTRAIN VERIFICATION TEST - 6.7L** .

   No

   - Replace the Powertrain Control Module in accordance with the service information.
   - Perform the POWERTRAIN VERIFICATION TEST - 6.7L. Refer to **POWERTRAIN VERIFICATION TEST - 6.7L** .

6. **CHECK THE HIGH SIDE DRIVER FOR A SHORT TO VOLTAGE**

   NOTE: Perform the following tests on the Fuel Injector circuit which was faulty.

   1. Turn the ignition off.
   2. Disconnect Fuel Injector wires at the Fuel Injector.
   3. Turn the ignition on.
   4. Measure the voltage of the High Side Driver circuit at the PCM C1 harness connector.

   Is there any voltage present?

Yes

- Repair the High Side Driver circuit for a short to voltage.
- Perform the POWERTRAIN VERIFICATION TEST - 6.7L. Refer to **POWERTRAIN VERIFICATION TEST - 6.7L** .

No

- Go To 7.

7. **CHECK THE LOW SIDE DRIVER FOR A SHORT TO VOLTAGE**
   1. Measure the voltage of the Low Side Driver circuit at the PCM C1 harness connector.

      Is there any voltage present?

      Yes

      - Repair the Low Side Driver circuit for a short to voltage.
      - Perform the POWERTRAIN VERIFICATION TEST - 6.7L. Refer to **POWERTRAIN VERIFICATION TEST - 6.7L** .

      No

      - Perform the INTERMITTENT CONDITION - 6.7L diagnostic procedure. Refer to **INTERMITTENT CONDITION - 6.7L** .

8. **CHECK THE VALVE COVER PASS THROUGH HARNESS CIRCUIT**

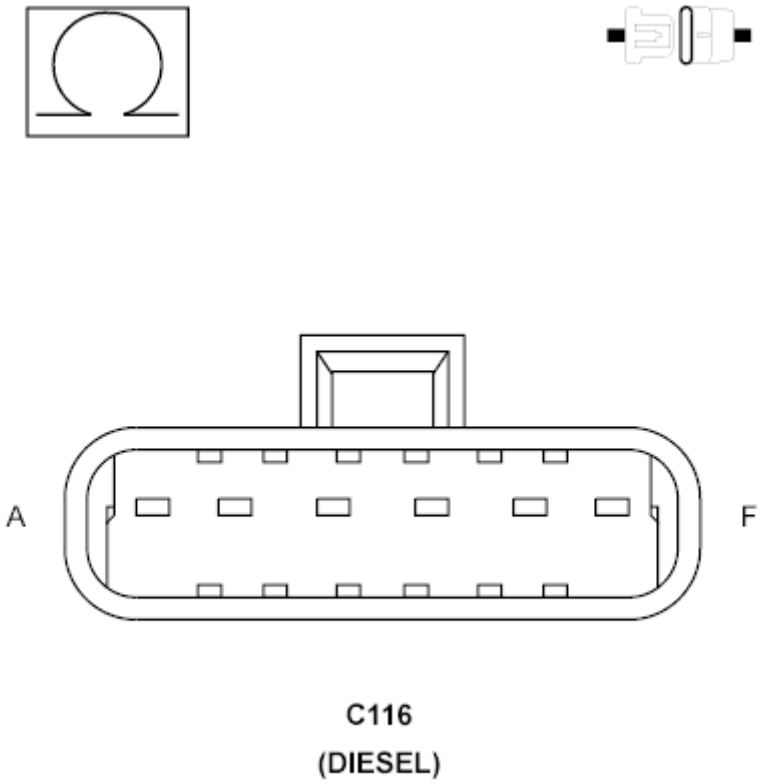

Fig. 69: Checking Valve Cover Pass Through Harness Circuits
Courtesy of CHRYSLER GROUP, LLC

NOTE: Perform the following tests on the Fuel Injector circuit which was faulty.

1. Disconnect the Valve Cover Pass Through harness connector.
2. Measure the resistance between the Low Side Driver circuit and the High Side Driver circuit at the Valve Cover Pass Through connector terminals.

NOTE: Be sure to zero the Ohm meter prior to checking the Fuel Injector circuit.

Is the resistance between 0-1 Ohm?

Yes

- Go To 9.

No

- Go To 11.

9. **CHECK THE HIGH SIDE CIRCUIT IN ENGINE HARNESS**

1. Measure the resistance of the High Side Driver circuit between the Valve Cover Pass Through harness connector and the PCM C1 harness connector.

NOTE: **Be sure to zero the Ohm meter prior to checking the Fuel Injector circuit.**

Is the resistance between 0-1 Ohm?

Yes

- Go To 10.

No

- Repair the High Side Driver circuit for an open or high resistance.
- Perform the POWERTRAIN VERIFICATION TEST - 6.7L. Refer to **POWERTRAIN VERIFICATION TEST - 6.7L** .

10. **CHECK THE LOW SIDE CIRCUIT IN ENGINE HARNESS**
    1. Measure the resistance of the Low Side Driver circuit between the Valve Cover Pass Through harness connector and the PCM C1 harness connector.

NOTE: **Be sure to zero the Ohm meter prior to checking the Fuel Injector circuit.**

Is the resistance between 0-1 Ohm?

Yes

- Perform the INTERMITTENT CONDITION - 6.7L diagnostic procedure. Refer to **INTERMITTENT CONDITION - 6.7L** .

No

- Repair the Low Side Driver circuit for an open or high resistance.
- Perform the POWERTRAIN VERIFICATION TEST - 6.7L. Refer to **POWERTRAIN VERIFICATION TEST - 6.7L** .

11. **CHECK THE FUEL INJECTORS**
    1. Disconnect all bank 1 Fuel Injector wires at the Fuel Injectors.
    2. Measure the resistance across the terminals at the Fuel Injector.

NOTE: **Be sure to zero the Ohm meter prior to checking the Fuel Injector circuit.**

Is the resistance between 0-1 Ohm?

Yes

- Replace the Valve Cover Pass Through harness.
- Perform the POWERTRAIN VERIFICATION TEST - 6.7L. Refer to **POWERTRAIN VERIFICATION TEST - 6.7L** .

No

- Replace the Fuel Injector in accordance with the.
- Perform the POWERTRAIN VERIFICATION TEST - 6.7L. Refer to **POWERTRAIN VERIFICATION TEST - 6.7L** .

12. **CHECK FOR THE DRIVER CIRCUITS SHORTED TOGETHER**
    1. Disconnect all bank 1 Fuel Injector wires at the Fuel Injectors.
    2. Measure the resistance between all bank 1 Driver circuits at the PCM C1 harness connector.

    Is the resistance below 10k Ohms between any circuits?

    Yes

    - Go To 13.

    No

    - Go To 14.

13. **CHECK THE VALVE COVER PASS THROUGH HARNESS CIRCUIT**

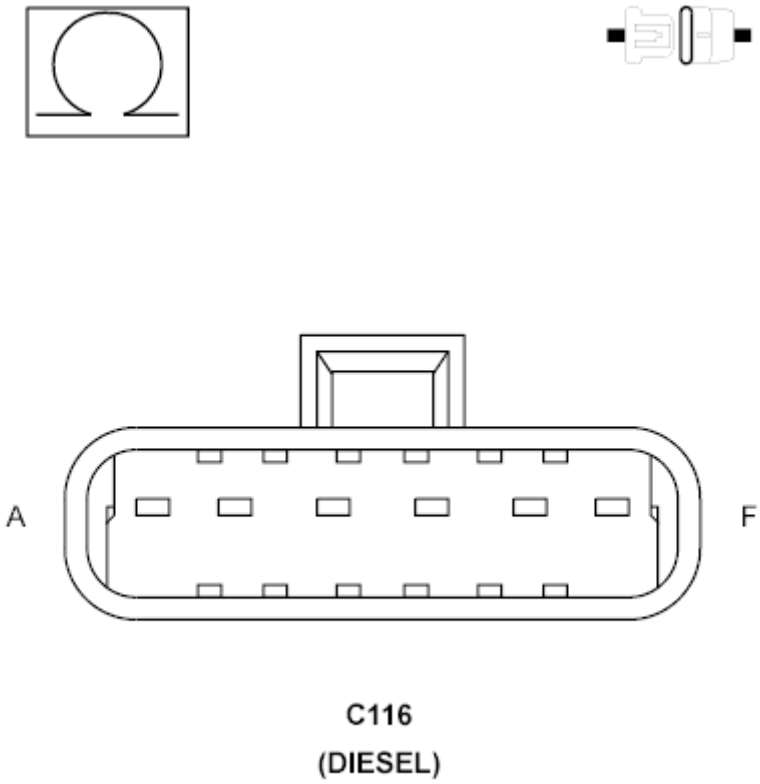

Fig. 70: Checking Valve Cover Pass Through Harness Circuits
Courtesy of CHRYSLER GROUP, LLC

1. Disconnect the Valve Cover Pass Through harness connector.
2. Measure the resistance between all bank 1 Driver circuits of the Valve Cover Pass Through connector terminals.

   Is the resistance below 10k Ohms between any circuits?

   Yes

   - Replace the Valve Cover Pass Through harness in accordance with the service information.
   - Perform the POWERTRAIN VERIFICATION TEST - 6.7L. Refer to **POWERTRAIN VERIFICATION TEST - 6.7L** .

   No

   - Repair the short between the bank 1 Driver circuits in the engine harness.
   - Perform the POWERTRAIN VERIFICATION TEST - 6.7L. Refer to **POWERTRAIN VERIFICATION TEST - 6.7L** .

14. **CHECK THE HIGH SIDE DRIVER CIRCUIT FOR A SHORT TO GROUND**

NOTE: Perform the following tests on the Fuel Injector circuit which was faulty.

1. Disconnect the Valve Cover Pass Through harness connector.
2. Measure the resistance between ground and the High Side Driver circuit at the PCM C1 harness connector.

   Is the resistance below 10k Ohms?

   Yes

   - Repair the High Side Driver circuit for a short to ground.
   - Perform the POWERTRAIN VERIFICATION TEST - 6.7L. Refer to **POWERTRAIN VERIFICATION TEST - 6.7L** .

   No

   - Go To 15.

15. **CHECK THE LOW SIDE DRIVER CIRCUIT FOR A SHORT TO GROUND**
    1. Measure the resistance between ground and the Low Side Driver circuit at the PCM C1 harness connector.

       Is the resistance below 10k Ohms?

       Yes

       - Repair the Low Side Driver circuit for a short to ground.
       - Perform the POWERTRAIN VERIFICATION TEST - 6.7L. Refer to **POWERTRAIN VERIFICATION TEST - 6.7L** .

       No

       - Go To 16.

16. **CHECK THE FUEL INJECTORS**
    1. Measure the resistance between ground and one of the Fuel Injector terminals.

       Is the resistance below 10k Ohms?

       Yes

       - Replace the Fuel Injector in accordance with the service information.
       - Perform the POWERTRAIN VERIFICATION TEST - 6.7L. Refer to **POWERTRAIN VERIFICATION TEST - 6.7L** .

       No

- Replace the Valve Cover Pass Through harness in accordance with the service information.
- Perform the POWERTRAIN VERIFICATION TEST - 6.7L. Refer to **POWERTRAIN VERIFICATION TEST - 6.7L** .

P0202-FUEL INJECTOR 2 CIRCUIT/OPEN

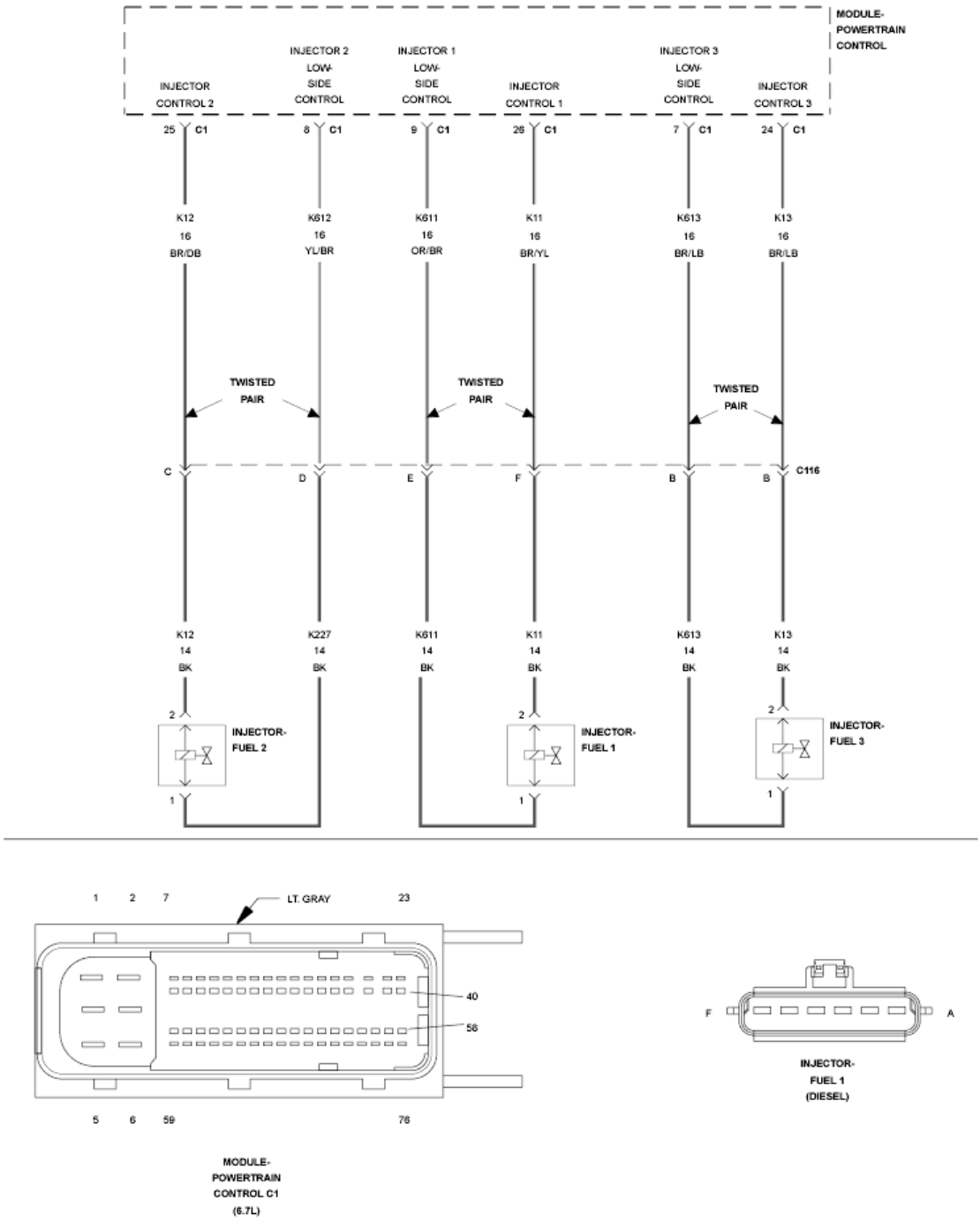

Fig. 71: Fuel Injector Circuit Schematic
Courtesy of CHRYSLER GROUP, LLC

For a complete wiring diagram, **refer to appropriate SYSTEM WIRING DIAGRAMS article** .

THEORY OF OPERATION

The Powertrain Control Module (PCM) actuates the solenoid in the Fuel Injector causing the needle valve to rise and fuel flows through the spray holes in the nozzle tip into the combustion chamber. The PCM has a common internal driver circuit to all three Fuel Injectors on each bank. If any injector circuit on a given bank has a failure, a DTC will be set for all three Fuel Injectors on that bank. Fuel Injectors 1, 2, 3 are grouped together on bank 1. Fuel Injectors 4, 5, 6 are grouped together on bank 2. The MIL lamp will light immediately after the diagnostic runs and fails. During this time the customer may experience engine surge or stumble. The MIL lamp will turn off once the diagnostic runs and passes in four consecutive drive cycles.

WHEN MONITORED:

While the engine is running.

SET CONDITION:

When the Fuel Injector current falls below a calibrated threshold.

POSSIBLE CAUSES

Possible Causes
HIGH SIDE DRIVER CIRCUIT OPEN/HIGH RESISTANCE LOW SIDE DRIVER CIRCUIT OPEN/HIGH RESISTANCE HIGH SIDE DRIVER CIRCUIT SHORTED TO GROUND LOW SIDE DRIVER CIRCUIT SHORTED TO GROUND HIGH SIDE DRIVER CIRCUIT SHORTED TO VOLTAGE
LOW SIDE DRIVER CIRCUIT SHORTED TO VOLTAGE
DRIVER CIRCUITS SHORTED TOGETHER
FUEL INJECTOR
POWERTRAIN CONTROL MODULE (PCM)

Always perform the Pre-Diagnostic Troubleshooting procedure before proceeding. Refer to PRE-DIAGNOSTIC TROUBLESHOOTING PROCEDURE - 6.7L .

DIAGNOSTIC TEST

1. **ACTIVE DTC**
    1. Ignition on, engine not running.
    2. With the scan tool check for active DTCs.

       Is the DTC active?

       Yes

- Go To 2.

No

- Perform the INTERMITTENT CONDITION - 6.7L diagnostic procedure. Refer to **INTERMITTENT CONDITION - 6.7L** .

2. **CHECK EACH FUEL INJECTOR CIRCUIT FOR AN OPEN/HIGH RESISTANCE**
   1. Turn the ignition off.
   2. Disconnect the PCM C1 harness connector.
   3. Measure the resistance between the:
      - (K11) Fuel Injector 1 High Side Driver circuit and the (K611) Fuel Injector 1 Low Side Driver circuit at the PCM C1 harness connector.
      - (K12) Fuel Injector 2 High Side Driver circuit and the (K612) Fuel Injector 2 Low Side Driver circuit at the PCM C1 harness connector.
      - (K13) Fuel Injector 3 High Side Driver circuit and the (K613) Fuel Injector 3 Low Side Driver circuit at the PCM C1 harness connector.

NOTE: **Be sure to zero the Ohm meter prior to checking the Fuel Injector circuit. Resistance reading should be between 0-1 Ohm.**

Is the resistance between 0-1 Ohm on all circuits?

Yes

- Go To 3.

No

- Go To 8.

3. **CHECK EACH FUEL INJECTOR CIRCUIT FOR A SHORT TO GROUND**
   1. Measure the resistance between ground and the:
      - (K11) Fuel Injector 1 High Side Driver circuit at the PCM C1 harness connector.
      - (K12) Fuel Injector 2 High Side Driver circuit at the PCM C1 harness connector.
      - (K13) Fuel Injector 3 High Side Driver circuit at the PCM C1 harness connector.

NOTE: **There should be no continuity between the circuit and ground.**

Is the resistance below 10k Ohms on any circuits?

Yes

- Go To 4.

No

- Go To 12.

4. **CHECK EACH FUEL INJECTOR CIRCUIT FOR A SHORT TO VOLTAGE**
   1. Turn the ignition on.
   2. Measure the voltage on the:
      - (K11) Fuel Injector 1 High Side Driver circuit at the PCM C1 harness connector.
      - (K12) Fuel Injector 2 High Side Driver circuit at the PCM C1 harness connector.
      - (K13) Fuel Injector 3 High Side Driver circuit at the PCM C1 harness connector.

   NOTE: There should be no voltage present.

   Is there voltage present on any circuit?

   Yes

   - Go To 6.

   No

   - Go To 5.

5. **CHECK FOR THE DRIVER CIRCUITS SHORTED TOGETHER**
   1. Turn ignition off.
   2. Disconnect all bank 1 Fuel Injector wires at the Fuel Injectors.
   3. Measure the resistance between all bank 1 Driver circuits at the PCM C1 harness connector.

   Is the resistance below 10k Ohms between any Driver circuits?

   Yes

   - Repair the Driver circuits that are shorted together.
   - Perform the POWERTRAIN VERIFICATION TEST - 6.7L. Refer to **POWERTRAIN VERIFICATION TEST - 6.7L** .

   No

   - Replace the Powertrain Control Module in accordance with the service information.
   - Perform the POWERTRAIN VERIFICATION TEST - 6.7L. Refer to **POWERTRAIN VERIFICATION TEST - 6.7L** .

6. **HIGH SIDE DRIVER SHORTED TO VOLTAGE**

   NOTE: Perform the following tests on the Fuel Injector circuit which was faulty.

1. Turn the ignition off.
2. Disconnect Fuel Injector wires at the Fuel Injector.
3. Turn the ignition on.
4. Measure the voltage of the High Side Driver circuit at the PCM C1 harness connector.

   Is there any voltage present?

   Yes

   - Repair the High Side Driver circuit for a short to voltage.
   - Perform the POWERTRAIN VERIFICATION TEST - 6.7L. Refer to **POWERTRAIN VERIFICATION TEST - 6.7L** .

   No

   - Go To 7.

7. **CHECK THE LOW SIDE DRIVERS FOR A SHORT TO VOLTAGE**
   1. Measure the voltage of the Low Side Driver circuit at the PCM C1 harness connector.

      Is there any voltage present?

      Yes

      - Repair the Low Side Driver circuit for a short to voltage.
      - Perform the POWERTRAIN VERIFICATION TEST - 6.7L. Refer to **POWERTRAIN VERIFICATION TEST - 6.7L** .

      No

      - Test complete. Perform the INTERMITTENT CONDITION - 6.7L diagnostic procedure. Refer to **INTERMITTENT CONDITION - 6.7L** .

8. **CHECK THE VALVE COVER PASS THROUGH HARNESS CIRCUIT**

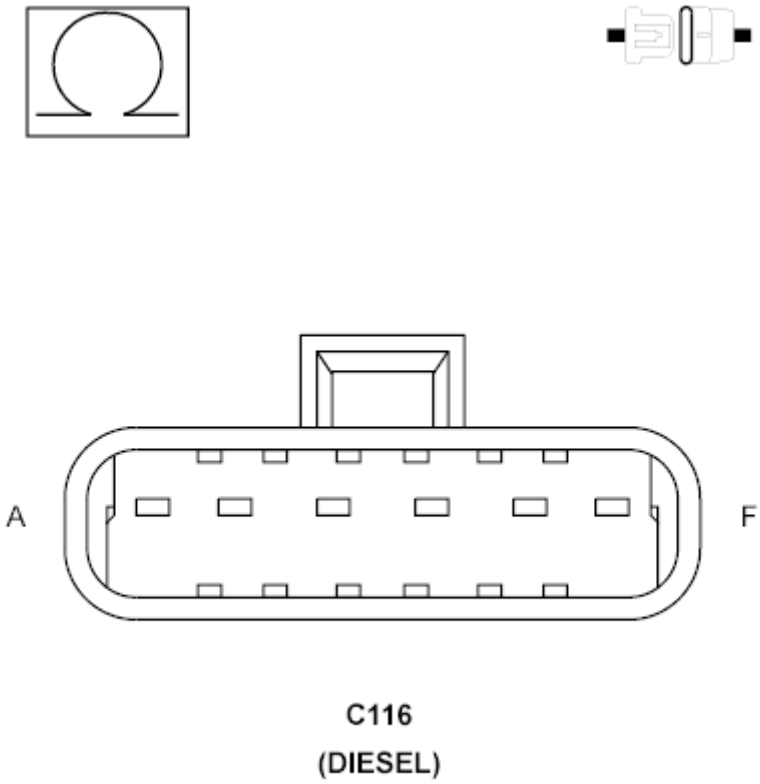

Fig. 72: Checking Valve Cover Pass Through Harness Circuits
Courtesy of CHRYSLER GROUP, LLC

NOTE: Perform the following tests on the Fuel Injector circuit which was faulty.

1. Turn the ignition off.
2. Disconnect the Valve Cover Pass Through harness connector.
3. Measure the resistance between Low Side Driver circuit and the High Side Driver circuit of the Valve Cover Pass Through connector terminals.

NOTE: Be sure to zero the Ohm meter prior to checking the Fuel Injector circuit.

Is the resistance between 0-1 Ohm?

Yes

- Go To 9.

No

- Go To 11.

9. **CHECK THE HIGH SIDE CIRCUITS IN ENGINE HARNESS**
    1. Measure the resistance of the High Side Driver circuit between the Valve Cover Pass Through harness connector and the PCM C1 harness connector.

    NOTE: **Be sure to zero the Ohm meter prior to checking the Fuel Injector circuit.**

    Is the resistance between 0-1 Ohm?

    Yes

    - Go To 10.

    No

    - Repair the High Side Driver circuit for an open or high resistance.
    - Perform the POWERTRAIN VERIFICATION TEST - 6.7L. Refer to **POWERTRAIN VERIFICATION TEST - 6.7L** .

10. **CHECK THE LOW SIDE CIRCUITS IN ENGINE HARNESS**
    1. Measure the resistance of the Low Side Driver circuit between the Valve Cover Pass Through harness connector and the PCM C1 harness connector.

    NOTE: **Be sure to zero the Ohm meter prior to checking the Fuel Injector circuit.**

    Is the resistance between 0-1 Ohm?

    Yes

    - Test complete. Perform the INTERMITTENT CONDITION - 6.7L diagnostic procedure. Refer to **INTERMITTENT CONDITION - 6.7L** .

    No

    - Repair the Low Side Driver circuit for an open or high resistance.
    - Perform the POWERTRAIN VERIFICATION TEST - 6.7L. Refer to **POWERTRAIN VERIFICATION TEST - 6.7L** .

11. **CHECK THE FUEL INJECTORS**
    1. Disconnect all bank 1 Fuel Injector wires at the Fuel Injectors.
    2. Measure the resistance across the terminals at the Fuel Injector.

    NOTE: **Be sure to zero the Ohm meter prior to checking the Fuel Injector circuit.**

Is the resistance between 0-1 Ohm?

Yes

- Replace the Valve Cover Pass Through harness in accordance with the service information.
- Perform the POWERTRAIN VERIFICATION TEST - 6.7L. Refer to **POWERTRAIN VERIFICATION TEST - 6.7L** .

No

- Replace the Fuel Injector in accordance with the service information.
- Perform the POWERTRAIN VERIFICATION TEST - 6.7L. Refer to **POWERTRAIN VERIFICATION TEST - 6.7L** .

12. **CHECK FOR THE DRIVER CIRCUITS SHORTED TOGETHER**
    1. Disconnect all bank 1 Fuel Injector wires at the Fuel Injectors.
    2. Measure the resistance between all bank 1 Driver circuits at the PCM C1 harness connector.

    Is the resistance below 10k Ohms between any circuits?

    Yes

    - Go To 13.

    No

    - Go To 14.

13. **CHECK THE VALVE COVER PASS THROUGH HARNESS CIRCUIT**

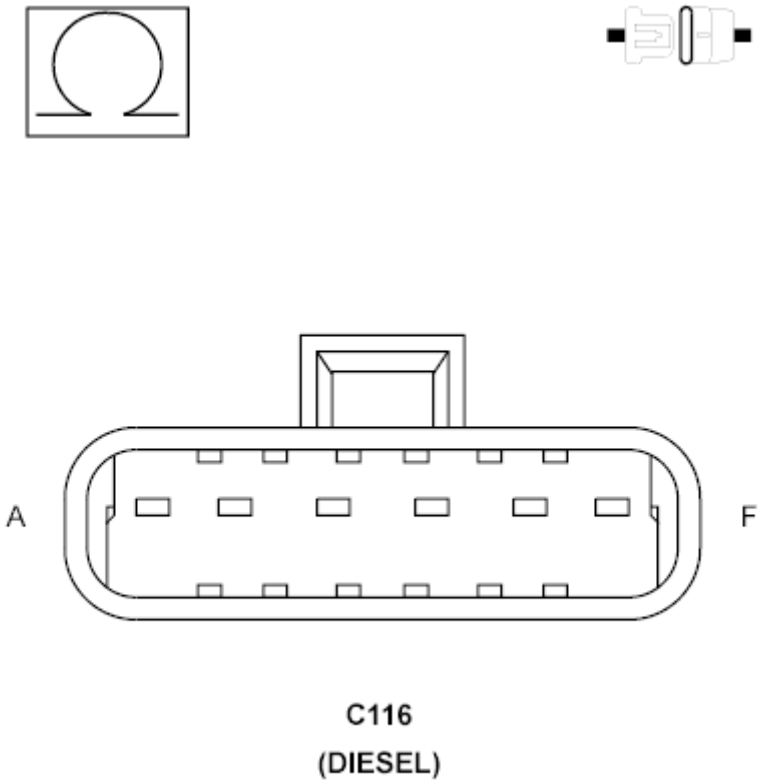

Fig. 73: Checking Valve Cover Pass Through Harness Circuits
Courtesy of CHRYSLER GROUP, LLC

1. Disconnect the Valve Cover Pass Through harness connector.
2. Measure the resistance between all bank 1 Driver circuits of the Valve Cover Pass Through harness.

   Is the resistance below 10k Ohms between any circuits?

   Yes

   - Replace the Valve Cover Pass Through harness in accordance with the service information.
   - Perform the POWERTRAIN VERIFICATION TEST - 6.7L. Refer to **POWERTRAIN VERIFICATION TEST - 6.7L** .

   No

   - Repair the short between the bank 1 Driver circuits in the engine harness.
   - Perform the POWERTRAIN VERIFICATION TEST - 6.7L. Refer to **POWERTRAIN VERIFICATION TEST - 6.7L** .

14. **CHECK THE HIGH SIDE DRIVER CIRCUIT FOR A SHORT TO GROUND**

NOTE: Perform the following tests on the Fuel Injector circuit which was faulty.

1. Disconnect the Valve Cover Pass Through harness connector.
2. Measure the resistance between ground and the High Side Driver circuit at the PCM C1 harness connector.

   Is the resistance below 10k Ohms?

   Yes

   - Repair the High Side Driver circuit for a short to ground.
   - Perform the POWERTRAIN VERIFICATION TEST - 6.7L. Refer to **POWERTRAIN VERIFICATION TEST - 6.7L** .

   No

   - Go To 15.

15. **CHECK THE LOW SIDE DRIVER CIRCUIT FOR A SHORT TO GROUND**
    1. Measure the resistance between ground and the Low Side Driver circuit at the PCM C1 connector.

       Is the resistance below 10k Ohms?

       Yes

       - Repair the Low Side Driver circuit for a short to ground.
       - Perform the POWERTRAIN VERIFICATION TEST - 6.7L. Refer to **POWERTRAIN VERIFICATION TEST - 6.7L** .

       No

       - Go To 16.

16. **CHECK THE FUEL INJECTORS**
    1. Measure the resistance between ground and one of the Fuel Injector terminals.

       Is the resistance below 10k Ohms?

       Yes

       - Replace the Fuel Injector in accordance with the service information.
       - Perform the POWERTRAIN VERIFICATION TEST - 6.7L. Refer to **POWERTRAIN VERIFICATION TEST - 6.7L** .

       No

       - Replace the Valve Cover Pass Through harness in accordance with the service information.

- Perform the POWERTRAIN VERIFICATION TEST - 6.7L. Refer to **POWERTRAIN VERIFICATION TEST - 6.7L** .

P0203-FUEL INJECTOR 3 CIRCUIT/OPEN

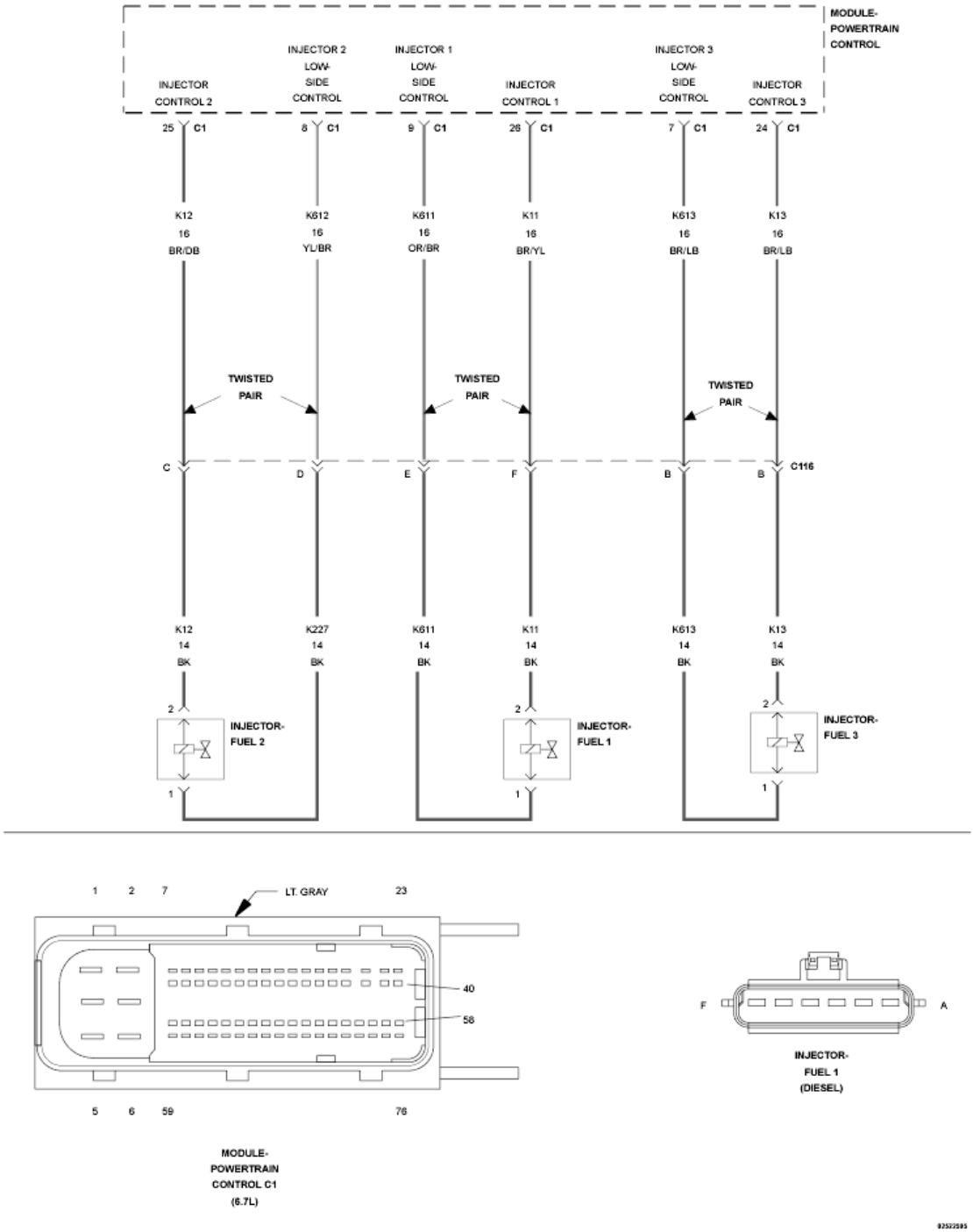

Fig. 74: Fuel Injector Circuit Schematic
Courtesy of CHRYSLER GROUP, LLC

For a complete wiring diagram, **refer to appropriate SYSTEM WIRING DIAGRAMS article** .

THEORY OF OPERATION

The Powertrain Control Module (PCM) actuates the solenoid in the Fuel Injector causing the needle valve to rise and fuel flows through the spray holes in the nozzle tip into the combustion chamber. The PCM has a common internal driver circuit to all three Fuel Injectors on each bank. If any injector circuit on a given bank has a failure, a DTC will be set for all three Fuel Injectors on that bank. Fuel Injectors 1, 2, 3 are grouped together on bank 1. Fuel Injectors 4, 5, 6 are grouped together on bank 2. The MIL lamp will light immediately after the diagnostic runs and fails. During this time the customer may experience engine surge or stumble. The MIL lamp will turn off once the diagnostic runs and passes in four consecutive drive cycles.

WHEN MONITORED:

While the engine is running.

SET CONDITION:

When the Fuel Injector current falls below a calibrated threshold.

POSSIBLE CAUSES

Possible Causes
HIGH SIDE DRIVER CIRCUIT OPEN/HIGH RESISTANCE LOW SIDE DRIVER CIRCUIT OPEN/HIGH RESISTANCE HIGH SIDE DRIVER CIRCUIT SHORTED TO GROUND LOW SIDE DRIVER CIRCUIT SHORTED TO GROUND HIGH SIDE DRIVER CIRCUIT SHORTED TO VOLTAGE
LOW SIDE DRIVER CIRCUIT SHORTED TO VOLTAGE
DRIVER CIRCUITS SHORTED TOGETHER
FUEL INJECTOR
POWERTRAIN CONTROL MODULE (PCM)

Always perform the Pre-Diagnostic Troubleshooting procedure before proceeding. Refer to PRE-DIAGNOSTIC TROUBLESHOOTING PROCEDURE - 6.7L .

DIAGNOSTIC TEST

1. **ACTIVE DTC**
    1. Ignition on, engine not running.
    2. With the scan tool check for active DTCs.

       Is the DTC active?

       Yes

- Go To 2.

No

- Perform the INTERMITTENT CONDITION - 6.7L diagnostic procedure. Refer to **INTERMITTENT CONDITION - 6.7L** .

2. **CHECK EACH FUEL INJECTOR CIRCUIT FOR AN OPEN/HIGH RESISTANCE**
   1. Turn the ignition off.
   2. Disconnect the PCM C1 harness connector.
   3. Measure the resistance between the:
      - (K11) Fuel Injector 1 High Side Driver circuit and the (K611) Fuel Injector 1 Low Side Driver circuit at the PCM C1 harness connector.
      - (K12) Fuel Injector 2 High Side Driver circuit and the (K612) Fuel Injector 2 Low Side Driver circuit at the PCM C1 harness connector.
      - (K13) Fuel Injector 3 High Side Driver circuit and the (K613) Fuel Injector 3 Low Side Driver circuit at the PCM C1 harness connector.

NOTE: **Be sure to zero the Ohm meter prior to checking the Fuel Injector circuit. Resistance reading should be between 0-1 Ohm.**

Is the resistance between 0-1 Ohm on all circuits?

Yes

- Go To 3.

No

- Go To 8.

3. **CHECK EACH FUEL INJECTOR CIRCUIT FOR A SHORT TO GROUND**
   1. Measure the resistance between ground and the:
      - (K11) Fuel Injector 1 High Side Driver circuit at the PCM C1 harness connector.
      - (K12) Fuel Injector 2 High Side Driver circuit at the PCM C1 harness connector.
      - (K13) Fuel Injector 3 High Side Driver circuit at the PCM C1 harness connector.

NOTE: **There should be no continuity between the circuit and ground.**

Is the resistance less than 10k Ohms on any circuit?

Yes

- Go To 12.

No

- Go To 4.

4. **CHECK EACH FUEL INJECTOR CIRCUIT FOR A SHORT TO VOLTAGE**
   1. Turn Ignition on.
   2. Measure the voltage on the:
      - (K11) Fuel Injector 1 High Side Driver circuit at the PCM C1 harness connector.
      - (K12) Fuel Injector 2 High Side Driver circuit at the PCM C1 harness connector.
      - (K13) Fuel Injector 3 High Side Driver circuit at the PCM C1 harness connector.

   NOTE: There should be no voltage present.

   Is there voltage present on any circuit?

   Yes

   - Go To 6.

   No

   - Go To 5.

5. **CHECK FOR THE DRIVER CIRCUITS SHORTED TOGETHER**
   1. Turn ignition off.
   2. Disconnect all bank 1 Fuel Injector wires at the Fuel Injectors.
   3. Measure the resistance between all bank 1 Driver circuits at the PCM C1 harness connector.

   Is the resistance below 10k Ohms between any Driver circuits?

   Yes

   - Repair the Driver circuits that are shorted together.
   - Perform the POWERTRAIN VERIFICATION TEST - 6.7L. Refer to **POWERTRAIN VERIFICATION TEST - 6.7L** .

   No

   - Replace the Powertrain Control Module in accordance with the service information.
   - Perform the POWERTRAIN VERIFICATION TEST - 6.7L. Refer to **POWERTRAIN VERIFICATION TEST - 6.7L** .

6. **CHECK THE HIGH SIDE DRIVER CIRCUIT FOR A SHORT TO VOLTAGE**

   NOTE: Perform the following tests on the Fuel Injector circuit which was faulty.

1. Turn the ignition off.
2. Disconnect Fuel Injector wires at the Fuel Injector.
3. Turn the ignition on.
4. Measure the voltage of the High Side Driver circuit at the PCM C1 harness connector.

   Is there any voltage present?

   Yes

   - Repair the High Side Driver circuit for a short to voltage.
   - Perform the POWERTRAIN VERIFICATION TEST - 6.7L. Refer to **POWERTRAIN VERIFICATION TEST - 6.7L** .

   No

   - Go To 7.

7. **CHECK THE LOW SIDE DRIVER CIRCUIT FOR A SHORT TO VOLTAGE**
   1. Measure the voltage of the Low Side Driver circuit at the PCM C1 harness connector.

      Is there any voltage present?

      Yes

      - Repair the Low Side Driver circuit for a short to voltage.
      - Perform the POWERTRAIN VERIFICATION TEST - 6.7L. Refer to **POWERTRAIN VERIFICATION TEST - 6.7L** .

      No

      - Test complete. Perform the INTERMITTENT CONDITION - 6.7L diagnostic procedure. Refer to **INTERMITTENT CONDITION - 6.7L** .

8. **CHECK THE VALVE COVER PASS THROUGH HARNESS CIRCUIT**

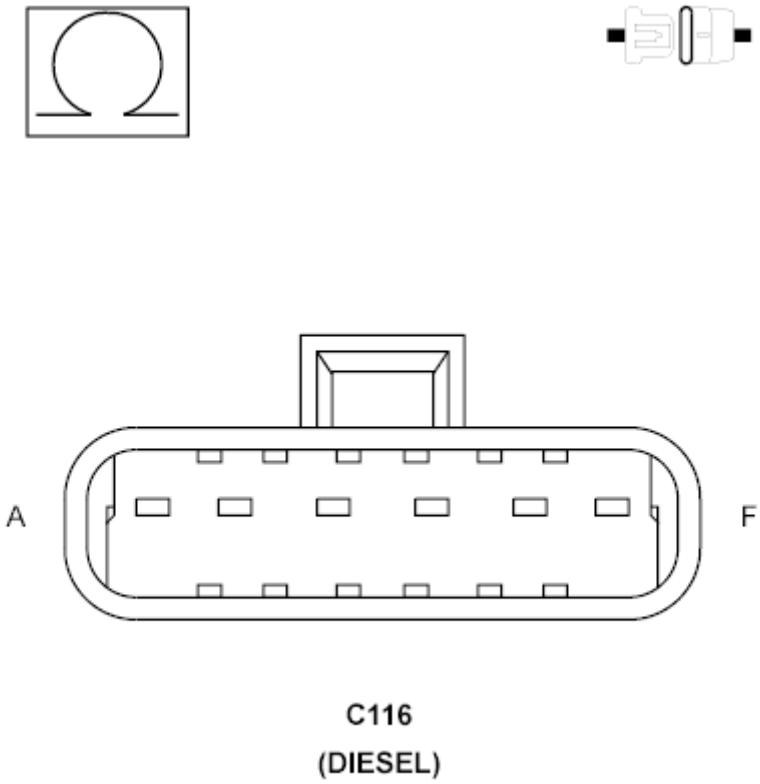

Fig. 75: Checking Valve Cover Pass Through Harness Circuits
Courtesy of CHRYSLER GROUP, LLC

NOTE: Perform the following tests on the Fuel Injector circuit which was faulty.

1. Disconnect the Valve Cover Pass Through harness connector.
2. Measure the resistance between Low Side Driver circuit and the High Side Driver circuit at the Valve Cover Pass Through connector terminals.

NOTE: Be sure to zero the Ohm meter prior to checking the Fuel Injector circuit.

Is the resistance between 0-1 Ohm?

Yes

- Go To 9.

No

- Go To 11.

9. **CHECK THE HIGH SIDE CIRCUITS IN ENGINE HARNESS**

1. Measure the resistance of the High Side Driver circuit between the Valve Cover Pass Through harness connector and the PCM C1 harness connector.

NOTE: **Be sure to zero the Ohm meter prior to checking the Fuel Injector circuit.**

Is the resistance between 0-1 Ohm?

Yes

- Go To 10.

No

- Repair the High Side Driver circuit for an open or high resistance.
- Perform the POWERTRAIN VERIFICATION TEST - 6.7L. Refer to **POWERTRAIN VERIFICATION TEST - 6.7L** .

10. **CHECK THE LOW SIDE CIRCUITS IN ENGINE HARNESS**
    1. Measure the resistance of the Low Side Driver circuit between the Valve Cover Pass Through harness connector and the PCM C1 harness connector.

NOTE: **Be sure to zero the Ohm meter prior to checking the Fuel Injector circuit.**

Is the resistance between 0-1 Ohm?

Yes

- Test complete. Perform the INTERMITTENT CONDITION - 6.7L diagnostic procedure. Refer to **INTERMITTENT CONDITION - 6.7L** .

No

- Repair the Low Side Driver circuit for an open or high resistance.
- Perform the POWERTRAIN VERIFICATION TEST - 6.7L. Refer to **POWERTRAIN VERIFICATION TEST - 6.7L** .

11. **CHECK THE FUEL INJECTORS**
    1. Disconnect all bank 1 Fuel Injector wires at the Fuel Injectors.
    2. Measure the resistance across the terminals at the Fuel Injector.

NOTE: **Be sure to zero the Ohm meter prior to checking the Fuel Injector circuit.**

Is the resistance between 0-1 Ohm?

Yes

- Replace the Valve Cover Pass Through harness in accordance with the service information.
- Perform the POWERTRAIN VERIFICATION TEST - 6.7L. Refer to **POWERTRAIN VERIFICATION TEST - 6.7L** .

No

- Replace the Fuel Injector in accordance with the service information.
- Perform the POWERTRAIN VERIFICATION TEST - 6.7L. Refer to **POWERTRAIN VERIFICATION TEST - 6.7L** .

12. **CHECK FOR THE DRIVER CIRCUITS SHORTED TOGETHER**
    1. Disconnect all bank 1 Fuel Injector wires at the Fuel Injectors.
    2. Measure the resistance between all bank 1 Driver circuits at the PCM C1 harness connector.

    Is the resistance below 10k Ohms between any circuits?

    Yes

    - Go To 13.

    No

    - Go To 14.
13. **CHECK THE VALVE COVER PASS THROUGH HARNESS CIRCUITS**

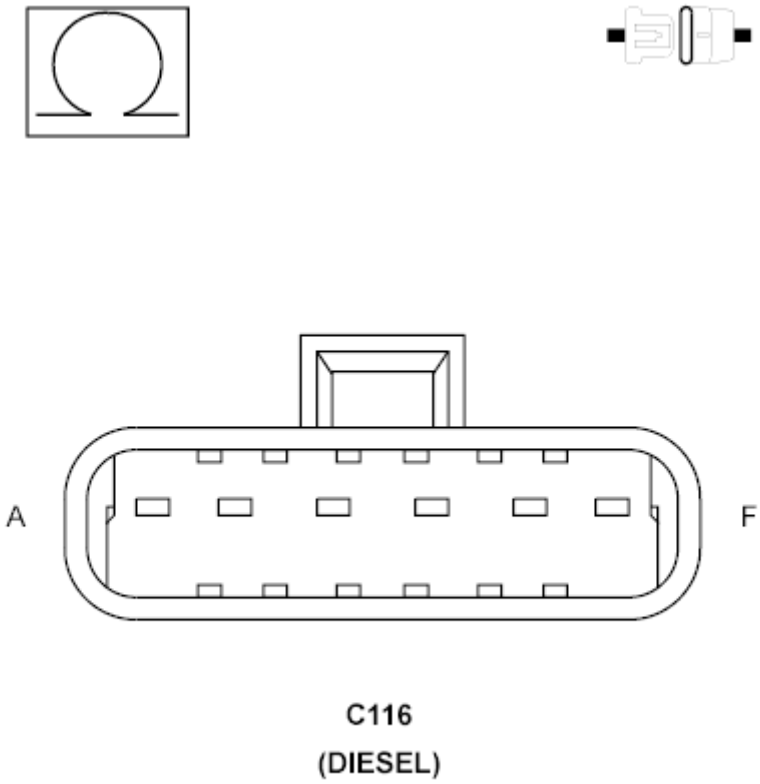

Fig. 76: Checking Valve Cover Pass Through Harness Circuits
Courtesy of CHRYSLER GROUP, LLC

1. Disconnect the Valve Cover Pass Through harness connector.
2. Measure the resistance between all bank 1 Driver circuits of the Valve Cover Pass Through connector terminals.

   Is the resistance below 10k Ohms between any circuits?

   Yes

   - Replace the Valve Cover Pass Through harness in accordance with the service information.
   - Perform the POWERTRAIN VERIFICATION TEST - 6.7L. Refer to **POWERTRAIN VERIFICATION TEST - 6.7L** .

   No

   - Repair the short between the bank 1 Driver circuits in the engine harness.
   - Perform the POWERTRAIN VERIFICATION TEST - 6.7L. Refer to **POWERTRAIN VERIFICATION TEST - 6.7L** .

14. **CHECK THE HIGH SIDE DRIVER CIRCUIT FOR A SHORT TO GROUND**

NOTE: Perform the following tests on the Fuel Injector circuit which was faulty.

1. Disconnect the Valve Cover Pass Through harness connector.
2. Measure the resistance between ground and the High Side Driver circuit at the PCM C1 connector.

   Is the resistance below 10k Ohms?

   Yes

   - Repair the short to ground in the High Side Driver circuit.
   - Perform the POWERTRAIN VERIFICATION TEST - 6.7L. Refer to **POWERTRAIN VERIFICATION TEST - 6.7L** .

   No

   - Go To 15.

15. **CHECK THE LOW SIDE DRIVER CIRCUIT FOR A SHORT TO GROUND**
    1. Measure the resistance between ground and the Low Side Driver circuit at the PCM C1 connector.

       Is the resistance below 10k Ohms?

       Yes

       - Repair the Low Side Driver circuit for a short to ground.
       - Perform the POWERTRAIN VERIFICATION TEST - 6.7L. Refer to **POWERTRAIN VERIFICATION TEST - 6.7L** .

       No

       - Go To 16.

16. **CHECK THE FUEL INJECTORS**
    1. Measure the resistance between ground and one of the Fuel Injector terminals.

       Is the resistance below 10k Ohms?

       Yes

       - Replace the Fuel Injector in accordance with the service information.
       - Perform the POWERTRAIN VERIFICATION TEST - 6.7L. Refer to **POWERTRAIN VERIFICATION TEST - 6.7L** .

       No

       - Replace the Valve Cover Pass Through harness in accordance with the service information.
       - Perform the POWERTRAIN VERIFICATION TEST - 6.7L. Refer to **POWERTRAIN**

VERIFICATION TEST - 6.7L .

P0204-FUEL INJECTOR 4 CIRCUIT/OPEN

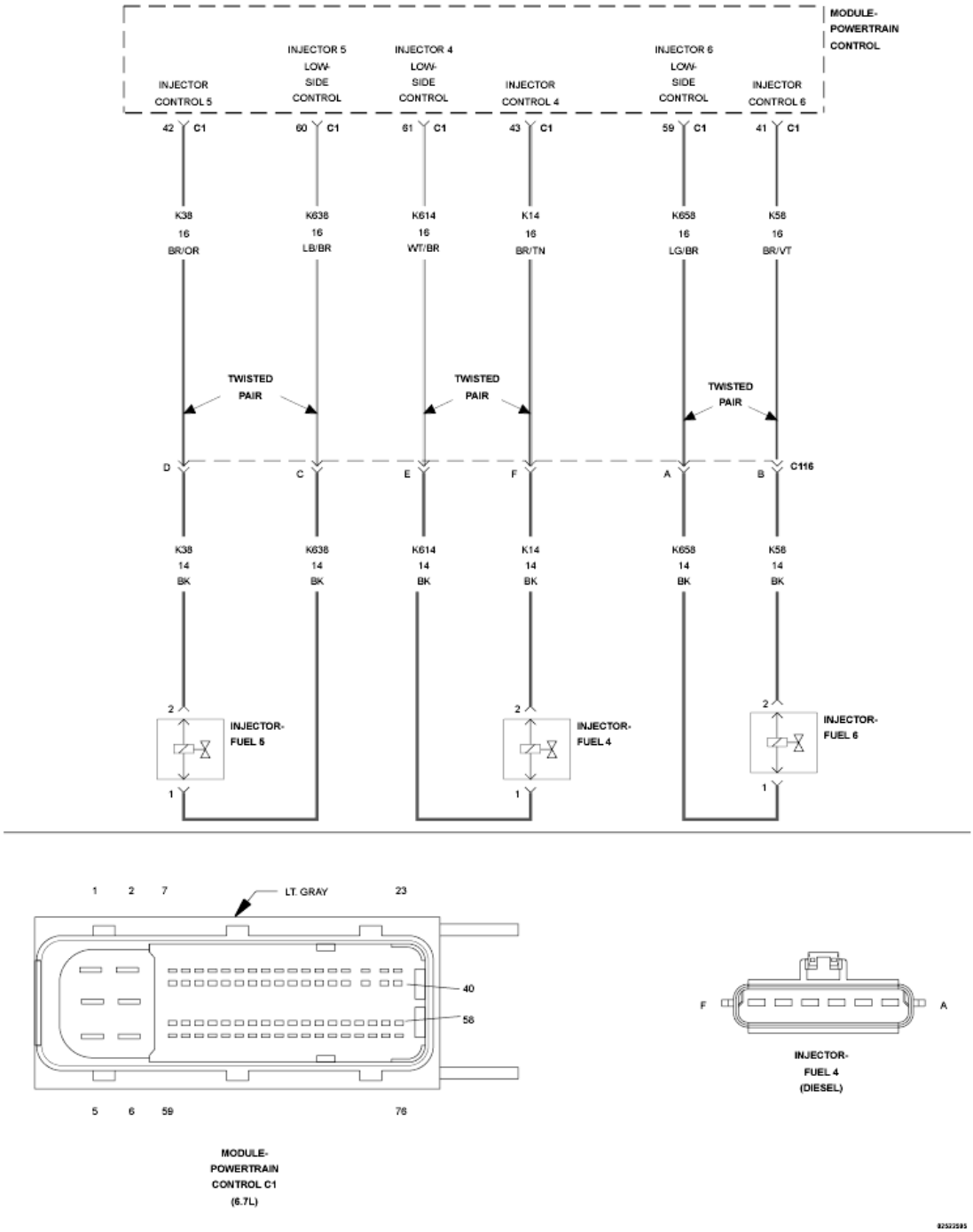

Fig. 77: Fuel Injector Circuit Schematic
Courtesy of CHRYSLER GROUP, LLC

For a complete wiring diagram, **refer to appropriate SYSTEM WIRING DIAGRAMS article** .

THEORY OF OPERATION

The Powertrain Control Module (PCM) actuates the solenoid in the Fuel Injector causing the needle valve to rise and fuel flows through the spray holes in the nozzle tip into the combustion chamber. The PCM has a common internal driver circuit to all three Fuel Injectors on each bank. If any injector circuit on a given bank has a failure, a DTC will be set for all three Fuel Injectors on that bank. Fuel Injectors 1, 2, 3 are grouped together on bank 1. Fuel Injectors 4, 5, 6 are grouped together on bank 2. The MIL lamp will light immediately after the diagnostic runs and fails. During this time the customer may experience engine surge or stumble. The MIL lamp will turn off once the diagnostic runs and passes in four consecutive drive cycles.

WHEN MONITORED:

While the engine is running.

SET CONDITION:

When the Fuel Injector current falls below a calibrated threshold.

POSSIBLE CAUSES

Possible Causes
HIGH SIDE DRIVER CIRCUIT OPEN/HIGH RESISTANCE LOW SIDE DRIVER CIRCUIT OPEN/HIGH RESISTANCE HIGH SIDE DRIVER CIRCUIT SHORTED TO GROUND LOW SIDE DRIVER CIRCUIT SHORTED TO GROUND HIGH SIDE DRIVER CIRCUIT SHORTED TO VOLTAGE
LOW SIDE DRIVER CIRCUIT SHORTED TO VOLTAGE
DRIVER CIRCUITS SHORTED TOGETHER
FUEL INJECTOR
POWERTRAIN CONTROL MODULE (PCM)

Always perform the Pre-Diagnostic Troubleshooting procedure before proceeding. Refer to PRE-DIAGNOSTIC TROUBLESHOOTING PROCEDURE - 6.7L .

DIAGNOSTIC TEST

1. **ACTIVE DTC**
    1. Ignition on, engine not running.
    2. With the scan tool check for active DTCs.

       Is the DTC active?

       Yes

       - Go To 2.

No

- Perform the INTERMITTENT CONDITION - 6.7L diagnostic procedure. Refer to **INTERMITTENT CONDITION - 6.7L** .

2. **CHECK EACH FUEL INJECTOR CIRCUIT FOR AN OPEN/HIGH RESISTANCE**
   1. Turn the ignition off.
   2. Disconnect the PCM C1 harness connector.
   3. Measure the resistance between the:
      - (K14) Fuel Injector 4 High Side Driver circuit and the (K611) Fuel Injector 4 Low Side Driver circuit at the PCM C1 harness connector.
      - (K38) Fuel Injector 5 High Side Driver circuit and the (K612) Fuel Injector 5 Low Side Driver circuit at the PCM C1 harness connector.
      - (K58) Fuel Injector 6 High Side Driver circuit and the (K613) Fuel Injector 6 Low Side Driver circuit at the PCM C1 harness connector.

NOTE: **Be sure to zero the Ohm meter prior to checking the Fuel Injector circuit. Resistance reading should be between 0-1 Ohm.**

Is the resistance between 0-1 Ohm on all circuits?

Yes

- Go To 3.

No

- Go To 8.

3. **CHECK EACH FUEL INJECTOR CIRCUIT FOR A SHORTED TO GROUND**
   1. Measure the resistance between ground and the:
      - (K14) Fuel Injector 4 High Side Driver circuit at the PCM C1 harness connector.
      - (K38) Fuel Injector 5 High Side Driver circuit at the PCM C1 harness connector.
      - (K58) Fuel Injector 6 High Side Driver circuit at the PCM C1 harness connector.

NOTE: **There should be no continuity between the circuit and ground.**

Is the resistance less than 10k Ohms on any circuit?

Yes

- Go To 12.

No

- Go To 4.

4. **CHECK EACH FUEL INJECTOR CIRCUIT FOR A SHORTED TO VOLTAGE**
   1. Turn the ignition on.
   2. Measure the voltage on the:
      - (K14) Fuel Injector 4 High Side Driver circuit at the PCM C1 harness connector.
      - (K38) Fuel Injector 5 High Side Driver circuit at the PCM C1 harness connector.
      - (K58) Fuel Injector 6 High Side Driver circuit at the PCM C1 harness connector.

      NOTE: There should be no voltage present.

      Is there voltage present on any circuit?

      Yes

      - Go To 6.

      No

      - Go To 5.

5. **CHECK FOR THE DRIVER CIRCUITS SHORTED TOGETHER**
   1. Turn ignition off.
   2. Disconnect all bank 2 Fuel Injector wires at the Fuel Injectors.
   3. Measure the resistance between all bank 2 Driver circuits at the PCM C1 harness connector.

      Is the resistance below 10k Ohms between any Driver circuits?

      Yes

      - Repair the Driver circuits that are shorted together.
      - Perform the POWERTRAIN VERIFICATION TEST - 6.7L. Refer to **POWERTRAIN VERIFICATION TEST - 6.7L** .

      No

      - Replace and program the Powertrain Control Module in accordance with the service information.
      - Perform the POWERTRAIN VERIFICATION TEST - 6.7L. Refer to **POWERTRAIN VERIFICATION TEST - 6.7L** .

6. **CHECK THE HIGH SIDE DRIVER CIRCUIT FOR A SHORT TO VOLTAGE**

   NOTE: Perform the following tests on the Fuel Injector circuit which was faulty.

   1. Turn the ignition off.

2. Disconnect Fuel Injector wires at the Fuel Injector.
3. Turn the ignition on.
4. Measure the voltage of the High Side Driver circuit at the PCM C1 harness connector.

   Is there any voltage present?

   Yes

   - Repair the High Side Driver circuit for a short to voltage.
   - Perform the POWERTRAIN VERIFICATION TEST - 6.7L. Refer to **POWERTRAIN VERIFICATION TEST - 6.7L** .

   No

   - Go To 7.

7. **CHECK THE LOW SIDE DRIVER CIRCUIT FOR A SHORT TO VOLTAGE**
   1. Measure the voltage of the Low Side Driver circuit at the PCM C1 harness connector.

      Is there any voltage present?

      Yes

      - Repair the Low Side Driver circuit for a short to voltage.
      - Perform the POWERTRAIN VERIFICATION TEST - 6.7L. Refer to **POWERTRAIN VERIFICATION TEST - 6.7L** .

      No

      - Test complete. Perform the INTERMITTENT CONDITION - 6.7L diagnostic procedure. Refer to **INTERMITTENT CONDITION - 6.7L** .

8. **CHECK THE VALVE COVER PASS THROUGH HARNESS CIRCUIT**

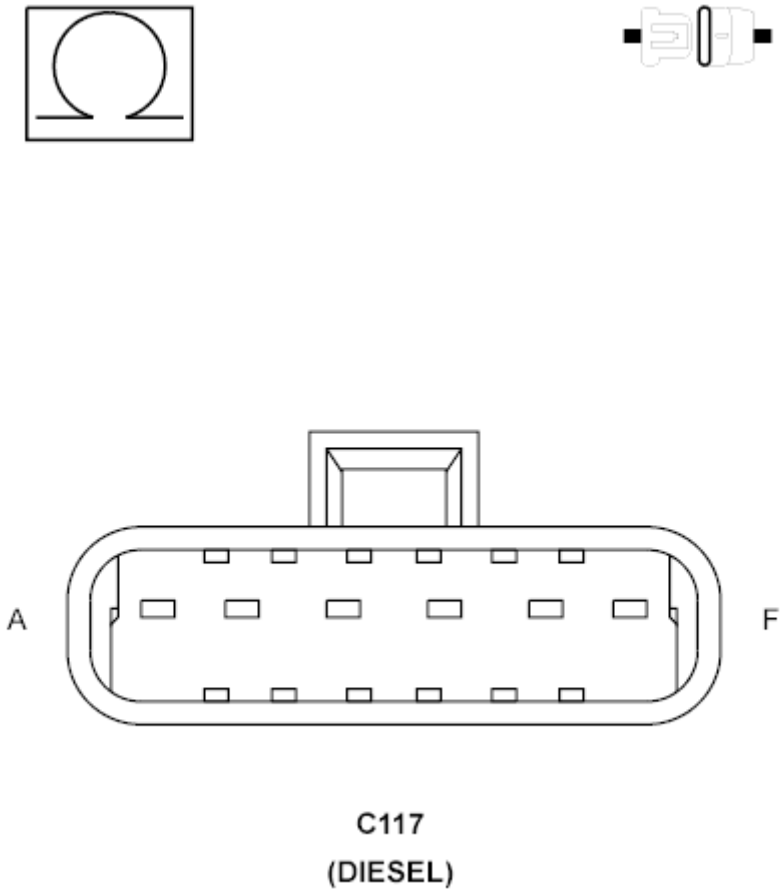

Fig. 78: Checking Valve Cover Pass Through Harness Circuits
Courtesy of CHRYSLER GROUP, LLC

NOTE: Perform the following tests on the Fuel Injector circuit which was faulty.

1. Disconnect the Valve Cover Pass Through harness connector.
2. Measure the resistance between Low Side Driver circuit and the High Side Driver circuit at the Valve Cover Pass Through connector terminals.

NOTE: Be sure to zero the Ohm meter prior to checking the Fuel Injector circuit.

Is the resistance between 0-1 Ohm?

Yes

- Go To 9.

No

- Go To 11.

9. **CHECK THE HIGH SIDE CIRCUITS IN ENGINE HARNESS**
    1. Measure the resistance of the High Side Driver circuit between the Valve Cover Pass Through harness connector and the PCM C1 harness connector.

    NOTE: **Be sure to zero the Ohm meter prior to checking the Fuel Injector circuit.**

    Is the resistance between 0-1 Ohm?

    Yes

    - Go To 10.

    No

    - Repair the High Side Driver circuit for an open or high resistance.
    - Perform the POWERTRAIN VERIFICATION TEST - 6.7L. Refer to **POWERTRAIN VERIFICATION TEST - 6.7L** .

10. **CHECK THE LOW SIDE CIRCUITS IN ENGINE HARNESS**
    1. Measure the resistance of the Low Side Driver circuit between the Valve Cover Pass Through harness connector and the PCM C1 harness connector.

    NOTE: **Be sure to zero the Ohm meter prior to checking the Fuel Injector circuit.**

    Is the resistance between 0-1 Ohm?

    Yes

    - Test complete. Perform the INTERMITTENT CONDITION - 6.7L diagnostic procedure. Refer to **INTERMITTENT CONDITION - 6.7L** .

    No

    - Repair the Low Side Driver circuit for an open or high resistance.
    - Perform the POWERTRAIN VERIFICATION TEST - 6.7L. Refer to **POWERTRAIN VERIFICATION TEST - 6.7L** .

11. **CHECK FUEL INJECTORS**
    1. Disconnect all bank 2 Fuel Injector wires at the Fuel Injectors.
    2. Measure the resistance across the terminals at the Fuel Injector.

    NOTE: **Be sure to zero the Ohm meter prior to checking the Fuel Injector circuit.**

Is the resistance between 0-1 Ohm?

Yes

- Replace the Valve Cover Pass Through harness in accordance with the service information.
- Perform the POWERTRAIN VERIFICATION TEST - 6.7L. Refer to **POWERTRAIN VERIFICATION TEST - 6.7L** .

No

- Replace the Fuel Injector in accordance with the service information.
- Perform the POWERTRAIN VERIFICATION TEST - 6.7L. Refer to **POWERTRAIN VERIFICATION TEST - 6.7L** .

12. **CHECK FOR THE DRIVER CIRCUITS SHORTED TOGETHER**
    1. Disconnect all bank 2 Fuel Injector wires at the Fuel Injectors.
    2. Measure the resistance between all bank 2 Driver circuits at the PCM C1 harness connector.

    Is the resistance below 10k Ohms between any circuits?

    Yes

    - Go To 13.

    No

    - Go To 14.
13. **CHECK THE VALVE COVER PASS THROUGH HARNESS CIRCUITS**

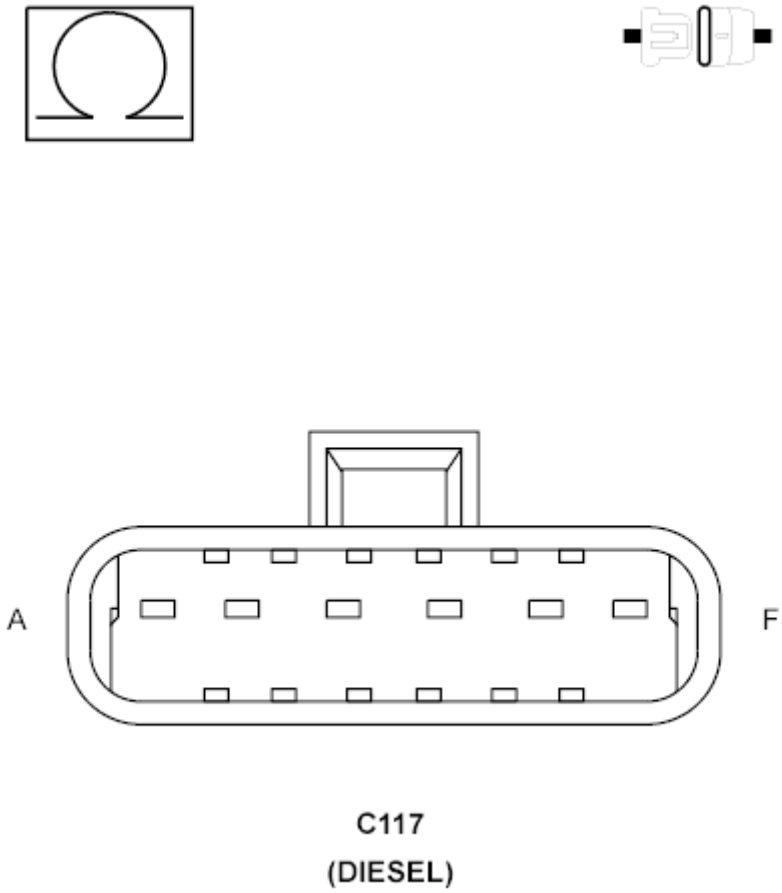

Fig. 79: Checking Valve Cover Pass Through Harness Circuits
Courtesy of CHRYSLER GROUP, LLC

1. Disconnect the Valve Cover Pass Through harness connector.
2. Measure the resistance between all bank 2 Driver circuits of the Valve Cover Pass Through connector terminals.

   Is the resistance below 10k Ohms between any circuits?

   Yes

   - Replace the Valve Cover Pass Through harness in accordance with the service information.
   - Perform the POWERTRAIN VERIFICATION TEST - 6.7L. Refer to **POWERTRAIN VERIFICATION TEST - 6.7L** .

   No

   - Repair the short between the bank 2 Driver circuits in the engine harness.
   - Perform the POWERTRAIN VERIFICATION TEST - 6.7L. Refer to **POWERTRAIN VERIFICATION TEST - 6.7L** .

14. **CHECK THE HIGH SIDE DRIVER CIRCUIT FOR A SHORT TO GROUND**

NOTE: Perform the following tests on the Fuel Injector circuit which was faulty.

1. Disconnect the Valve Cover Pass Through harness connector.
2. Measure the resistance between ground and the High Side Driver circuit at the PCM C1 connector.

Is the resistance below 10k Ohms?

Yes

- Repair the High Side Driver circuit for a short to ground.
- Perform the POWERTRAIN VERIFICATION TEST - 6.7L. Refer to **POWERTRAIN VERIFICATION TEST - 6.7L** .

No

- Go To 15.

15. **CHECK THE LOW SIDE DRIVER CIRCUIT FOR A SHORT TO GROUND**

1. Measure the resistance between ground and the Low Side Driver circuit at the PCM C1 connector.

Is the resistance below 10k Ohms?

Yes

- Repair the Low Side Driver circuit for a short to ground.
- Perform the POWERTRAIN VERIFICATION TEST - 6.7L. Refer to **POWERTRAIN VERIFICATION TEST - 6.7L** .

No

- Go To 16.

16. **CHECK THE FUEL INJECTORS**

1. Measure the resistance between ground and one of the Fuel Injector terminals.

Is the resistance below 10k Ohms?

Yes

- Replace the Fuel Injector in accordance with the service information.
- Perform the POWERTRAIN VERIFICATION TEST - 6.7L. Refer to **POWERTRAIN VERIFICATION TEST - 6.7L** .

No

- Replace the Valve Cover Pass Through harness in accordance with the service information.
- Perform the POWERTRAIN VERIFICATION TEST - 6.7L. Refer to **POWERTRAIN VERIFICATION TEST - 6.7L** .

P0205-FUEL INJECTOR 5 CIRCUIT/OPEN

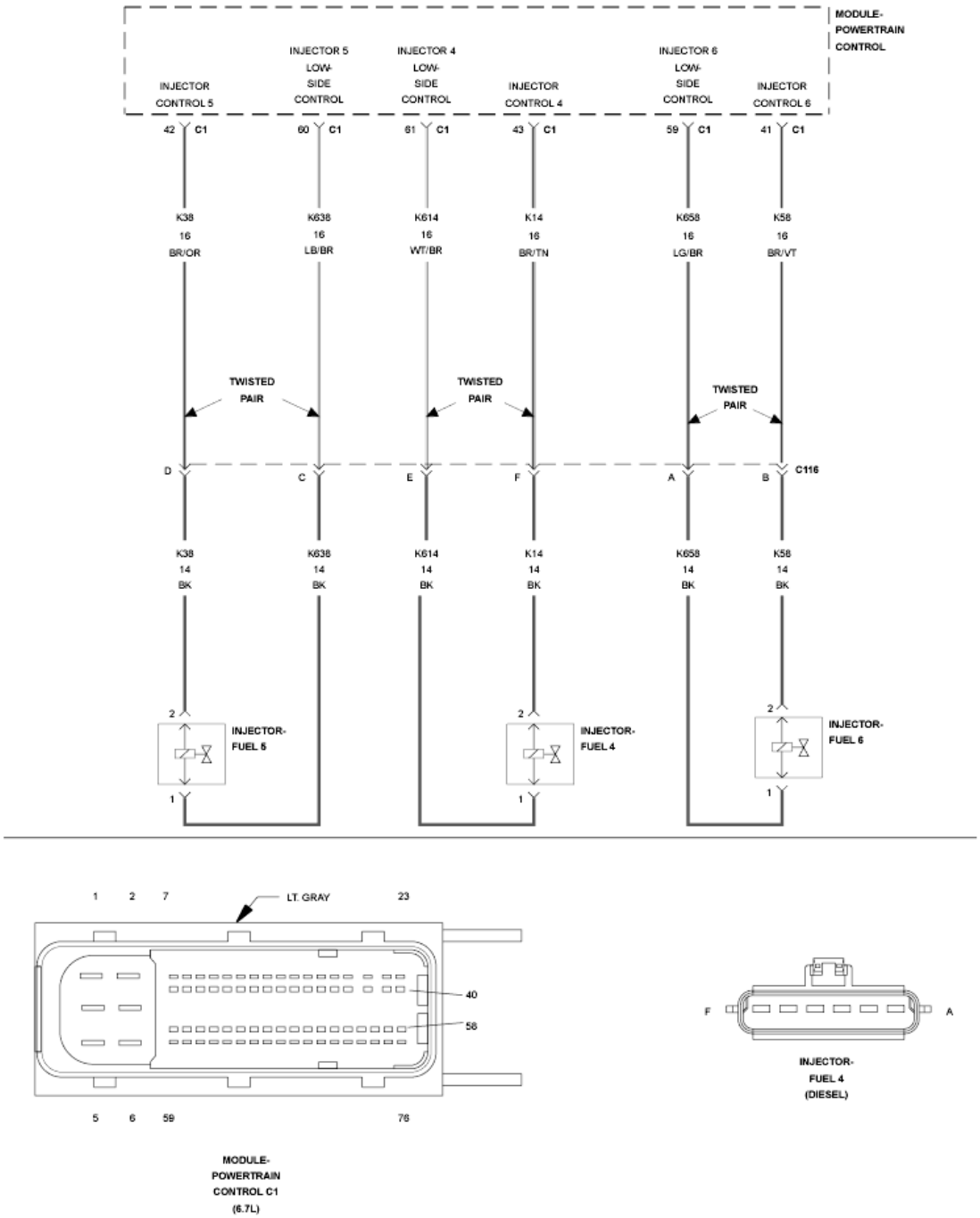

Fig. 80: Fuel Injector Circuit Schematic
Courtesy of CHRYSLER GROUP, LLC

For a complete wiring diagram, **refer to appropriate SYSTEM WIRING DIAGRAMS article** .

THEORY OF OPERATION

The Powertrain Control Module (PCM) actuates the solenoid in the Fuel Injector causing the needle valve to rise and fuel flows through the spray holes in the nozzle tip into the combustion chamber. The PCM has a common internal driver circuit to all three Fuel Injectors on each bank. If any injector circuit on a given bank has a failure, a DTC will be set for all three Fuel Injectors on that bank. Fuel Injectors 1, 2, 3 are grouped together on bank 1. Fuel Injectors 4, 5, 6 are grouped together on bank 2. The MIL lamp will light immediately after the diagnostic runs and fails. During this time the customer may experience engine surge or stumble. The MIL lamp will turn off once the diagnostic runs and passes in four consecutive drive cycles.

WHEN MONITORED:

While the engine is running.

SET CONDITION:

When the Fuel Injector current falls below a calibrated threshold.

POSSIBLE CAUSES

Possible Causes
HIGH SIDE DRIVER CIRCUIT OPEN/HIGH RESISTANCE LOW SIDE DRIVER CIRCUIT OPEN/HIGH RESISTANCE HIGH SIDE DRIVER CIRCUIT SHORTED TO GROUND LOW SIDE DRIVER CIRCUIT SHORTED TO GROUND HIGH SIDE DRIVER CIRCUIT SHORTED TO VOLTAGE
LOW SIDE DRIVER CIRCUIT SHORTED TO VOLTAGE
DRIVER CIRCUITS SHORTED TOGETHER
FUEL INJECTOR
POWERTRAIN CONTROL MODULE (PCM)

Always perform the Pre-Diagnostic Troubleshooting procedure before proceeding. Refer to PRE-DIAGNOSTIC TROUBLESHOOTING PROCEDURE - 6.7L .

DIAGNOSTIC TEST

1. **ACTIVE DTC**
    1. Ignition on, engine not running.
    2. With the scan tool check for active DTCs.

       Is the DTC active?

       Yes

- Go To 2.

No

- Perform the INTERMITTENT CONDITION - 6.7L diagnostic procedure. Refer to **INTERMITTENT CONDITION - 6.7L** .

2. **CHECK EACH FUEL INJECTOR CIRCUIT FOR AN OPEN/HIGH RESISTANCE**
   1. Turn the ignition off.
   2. Disconnect the PCM C1 harness connector.
   3. Measure the resistance between the:
      - (K14) Fuel Injector 4 High Side Driver circuit and the (K611) Fuel Injector 4 Low Side Driver circuit at the PCM C1 harness connector.
      - (K38) Fuel Injector 5 High Side Driver circuit and the (K612) Fuel Injector 5 Low Side Driver circuit at the PCM C1 harness connector.
      - (K58) Fuel Injector 6 High Side Driver circuit and the (K613) Fuel Injector 6 Low Side Driver circuit at the PCM C1 harness connector.

NOTE: **Be sure to zero the Ohm meter prior to checking the Fuel Injector circuit. Resistance reading should be between 0-1 Ohm.**

Is the resistance between 0-1 Ohm on all circuits?

Yes

- Go To 3.

No

- Go To 8.

3. **CHECK EACH FUEL INJECTOR CIRCUIT FOR A SHORTED TO GROUND**
   1. Measure the resistance between ground and the:
      - (K14) Fuel Injector 4 High Side Driver circuit at the PCM C1 harness connector.
      - (K38) Fuel Injector 5 High Side Driver circuit at the PCM C1 harness connector.
      - (K58) Fuel Injector 6 High Side Driver circuit at the PCM C1 harness connector.

NOTE: **There should be no continuity between the circuit and ground.**

Is the resistance below 10k Ohms on any circuit?

Yes

- Go To 12.

No

- Go To 4.

4. **CHECK EACH FUEL INJECTOR CIRCUIT FOR A SHORTED TO VOLTAGE**
   1. Turn Ignition on.
   2. Measure the voltage on the:
      - (K14) Fuel Injector 4 High Side Driver circuit at the PCM C1 harness connector.
      - (K38) Fuel Injector 5 High Side Driver circuit at the PCM C1 harness connector.
      - (K58) Fuel Injector 6 High Side Driver circuit at the PCM C1 harness connector.

   NOTE: There should be no voltage present.

   Is there voltage present on any circuit?

   Yes

   - Go To 6.

   No

   - Go To 5.

5. **CHECK FOR THE DRIVER CIRCUITS SHORTED TOGETHER**
   1. Turn ignition off.
   2. Disconnect all bank 2 Fuel Injector wires at the Fuel Injectors.
   3. Measure the resistance between all bank 2 Driver circuits at the PCM C1 harness connector.

   Is the resistance below 10k Ohms between any Driver circuits?

   Yes

   - Repair the Driver circuits that are shorted together.
   - Perform the POWERTRAIN VERIFICATION TEST - 6.7L. Refer to **POWERTRAIN VERIFICATION TEST - 6.7L** .

   No

   - Replace the Powertrain Control Module in accordance with the service information.
   - Perform the POWERTRAIN VERIFICATION TEST - 6.7L. Refer to **POWERTRAIN VERIFICATION TEST - 6.7L** .

6. **CHECK THE HIGH SIDE DRIVER CIRCUIT FOR A SHORT TO VOLTAGE**

   NOTE: Perform the following tests on the Fuel Injector circuit which was faulty.

1. Turn the ignition off.
2. Disconnect Fuel Injector wires at the Fuel Injector.
3. Turn the ignition on.
4. Measure the voltage of the High Side Driver circuit at the PCM C1 harness connector.

   Is there any voltage present?

   Yes

   - Repair the High Side Driver circuit for a short to voltage.
   - Perform the POWERTRAIN VERIFICATION TEST - 6.7L. Refer to **POWERTRAIN VERIFICATION TEST - 6.7L** .

   No

   - Go To 7.

7. **CHECK THE LOW SIDE DRIVER CIRCUIT FOR A SHORT TO VOLTAGE**
   1. Measure the voltage of the Low Side Driver circuit at the PCM C1 harness connector.

      Is there any voltage present?

      Yes

      - Repair the Low Side Driver circuit for a short to voltage.
      - Perform the POWERTRAIN VERIFICATION TEST - 6.7L. Refer to **POWERTRAIN VERIFICATION TEST - 6.7L** .

      No

      - Test complete. Perform the INTERMITTENT CONDITION - 6.7L diagnostic procedure. Refer to **INTERMITTENT CONDITION - 6.7L** .

8. **CHECK THE VALVE COVER PASS THROUGH HARNESS CIRCUIT**

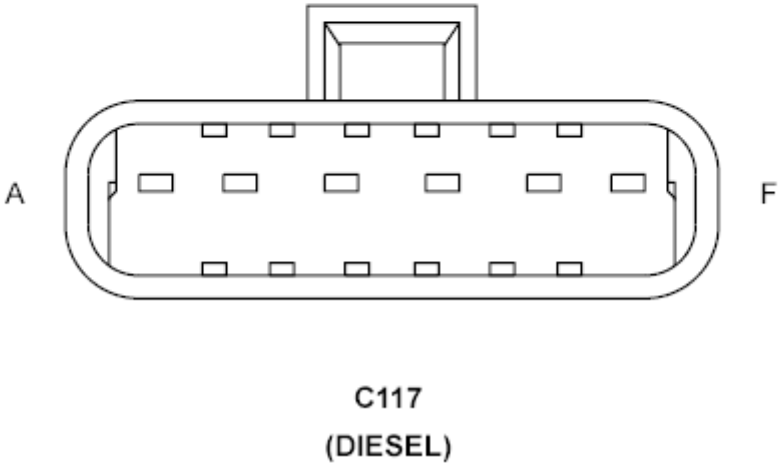

Fig. 81: Checking Valve Cover Pass Through Harness Circuits
Courtesy of CHRYSLER GROUP, LLC

NOTE: Perform the following tests on the Fuel Injector circuit which was faulty.

1. Disconnect the Valve Cover Pass Through harness connector.
2. Measure the resistance between Low Side Driver circuit and the High Side Driver circuit at the Valve Cover Pass Through connector terminals.

NOTE: Be sure to zero the Ohm meter prior to checking the Fuel Injector circuit.

Is the resistance between 0-1 Ohm?

Yes

- Go To 9.

No

- Go To 11.

9. **CHECK THE HIGH SIDE CIRCUITS IN ENGINE HARNESS**
    1. Measure the resistance of the High Side Driver circuit between the Valve Cover Pass Through harness connector and the PCM C1 harness connector.

    NOTE: **Be sure to zero the Ohm meter prior to checking the Fuel Injector circuit.**

    Is the resistance between 0-1 Ohm?

    Yes

    - Go To 10.

    No

    - Repair the High Side Driver circuit for an open or high resistance.
    - Perform the POWERTRAIN VERIFICATION TEST - 6.7L. Refer to **POWERTRAIN VERIFICATION TEST - 6.7L** .

10. **CHECK THE LOW SIDE CIRCUITS IN ENGINE HARNESS**
    1. Measure the resistance of the Low Side Driver circuit between the Valve Cover Pass Through harness connector and the PCM C1 harness connector.

    NOTE: **Be sure to zero the Ohm meter prior to checking the Fuel Injector circuit.**

    Is the resistance between 0-1 Ohm?

    Yes

    - Test complete. Perform the INTERMITTENT CONDITION - 6.7L diagnostic procedure. Refer to **INTERMITTENT CONDITION - 6.7L** .

    No

    - Repair the Low Side Driver circuit for an open or high resistance.
    - Perform the POWERTRAIN VERIFICATION TEST - 6.7L. Refer to **POWERTRAIN VERIFICATION TEST - 6.7L** .

11. **CHECK FUEL INJECTORS**
    1. Disconnect all bank 2 Fuel Injector wires at the Fuel Injectors.
    2. Measure the resistance across the terminals at the Fuel Injector.

    NOTE: **Be sure to zero the Ohm meter prior to checking the Fuel Injector circuit.**

Is the resistance between 0-1 Ohm?

Yes

- Replace the Valve Cover Pass Through harness in accordance with the service information.
- Perform the POWERTRAIN VERIFICATION TEST - 6.7L. Refer to **POWERTRAIN VERIFICATION TEST - 6.7L** .

No

- Replace the Fuel Injector in accordance with the service information.
- Perform the POWERTRAIN VERIFICATION TEST - 6.7L. Refer to **POWERTRAIN VERIFICATION TEST - 6.7L** .

12. **CHECK FOR THE DRIVER CIRCUITS SHORTED TOGETHER**
    1. Disconnect all bank 2 Fuel Injector wires at the Fuel Injectors.
    2. Measure the resistance between all bank 2 Driver circuits at the PCM C1 harness connector.

    Is the resistance below 10k Ohms between any circuits?

    Yes

    - Go To 13.

    No

    - Go To 14.
13. **CHECK THE VALVE COVER PASS THROUGH HARNESS CIRCUITS**

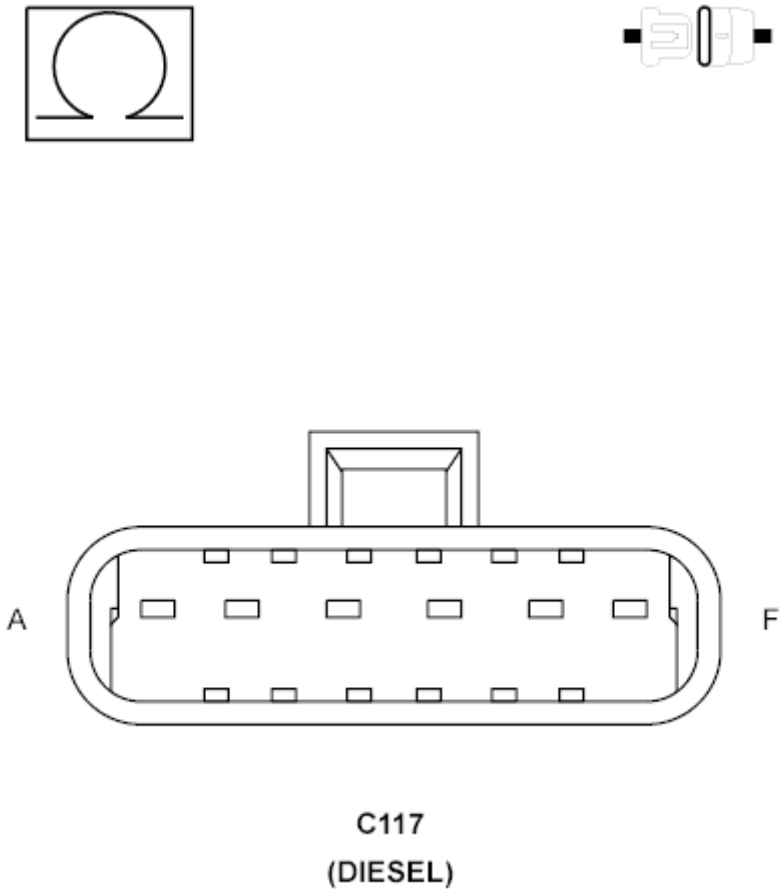

Fig. 82: Checking Valve Cover Pass Through Harness Circuits
Courtesy of CHRYSLER GROUP, LLC

1. Disconnect the Valve Cover Pass Through harness connector.
2. Measure the resistance between all bank 2 Driver circuits of the Valve Cover Pass Through connector terminals.

   Is the resistance below 10k Ohms between any circuits?

   Yes

   - Replace the Valve Cover Pass Through harness in accordance with the service information.
   - Perform the POWERTRAIN VERIFICATION TEST - 6.7L. Refer to **POWERTRAIN VERIFICATION TEST - 6.7L** .

   No

   - Repair the short between the bank 2 Driver circuits in the engine harness.
   - Perform the POWERTRAIN VERIFICATION TEST - 6.7L. Refer to **POWERTRAIN VERIFICATION TEST - 6.7L** .

14. **CHECK THE HIGH SIDE DRIVER CIRCUIT FOR A SHORT TO GROUND**

NOTE: Perform the following tests on the Fuel Injector circuit which was faulty.

1. Disconnect the Valve Cover Pass Through harness connector.
2. Measure the resistance between ground and the High Side Driver circuit at the PCM C1 connector.

Is the resistance below 10k Ohms?

Yes

- Repair the High Side Driver circuit for a short to ground.
- Perform the POWERTRAIN VERIFICATION TEST - 6.7L. Refer to **POWERTRAIN VERIFICATION TEST - 6.7L** .

No

- Go To 15.

15. **CHECK THE LOW SIDE DRIVER CIRCUIT FOR A SHORT TO GROUND**

1. Measure the resistance between ground and the Low Side Driver circuit at the PCM C1 connector.

Is the resistance below 10k Ohms?

Yes

- Repair the Low Side Driver circuit for a short to ground.
- Perform the POWERTRAIN VERIFICATION TEST - 6.7L. Refer to **POWERTRAIN VERIFICATION TEST - 6.7L** .

No

- Go To 16.

16. **CHECK THE FUEL INJECTORS**

1. Measure the resistance between ground and one of the Fuel Injector terminals.

Is the resistance below 10k Ohms?

Yes

- Replace the Fuel Injector in accordance with the service information.
- Perform the POWERTRAIN VERIFICATION TEST - 6.7L. Refer to **POWERTRAIN VERIFICATION TEST - 6.7L** .

No

- Replace the Valve Cover Pass Through harness in accordance with the service information.
- Perform the POWERTRAIN VERIFICATION TEST - 6.7L. Refer to **POWERTRAIN VERIFICATION TEST - 6.7L** .

P0206-FUEL INJECTOR 6 CIRCUIT/OPEN

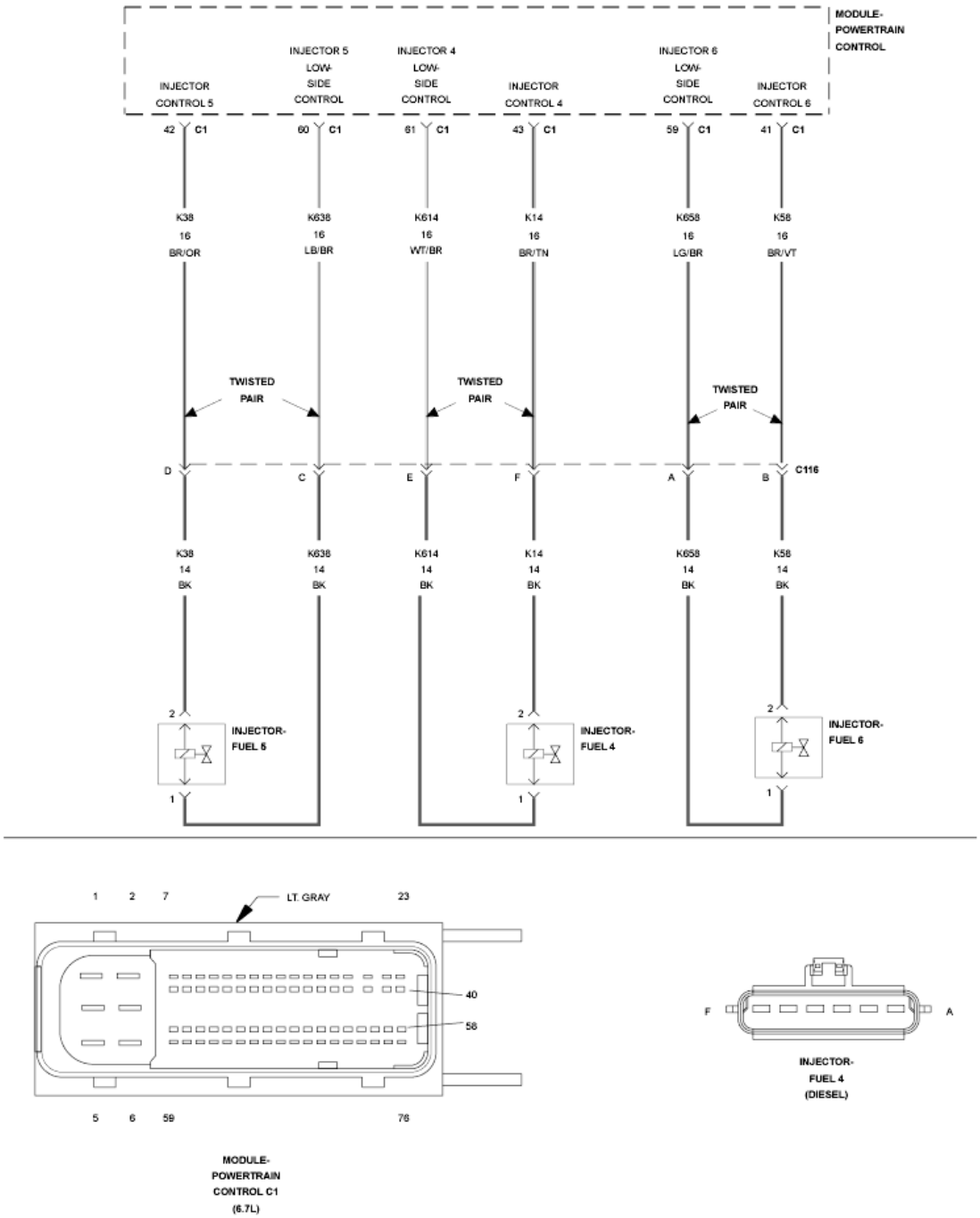

Fig. 83: Fuel Injector Circuit Schematic
Courtesy of CHRYSLER GROUP, LLC

For a complete wiring diagram, **refer to appropriate SYSTEM WIRING DIAGRAMS article** .

THEORY OF OPERATION

The Powertrain Control Module (PCM) actuates the solenoid in the Fuel Injector causing the needle valve to rise and fuel flows through the spray holes in the nozzle tip into the combustion chamber. The PCM has a common internal driver circuit to all three Fuel Injectors on each bank. If any injector circuit on a given bank has a failure, a DTC will be set for all three Fuel Injectors on that bank. Fuel Injectors 1, 2, 3 are grouped together on bank 1. Fuel Injectors 4, 5, 6 are grouped together on bank 2. The MIL lamp will light immediately after the diagnostic runs and fails. During this time the customer may experience engine surge or stumble. The MIL lamp will turn off once the diagnostic runs and passes in four consecutive drive cycles.

WHEN MONITORED:

While the engine is running.

SET CONDITION:

When the Fuel Injector current falls below a calibrated threshold.

POSSIBLE CAUSES

Possible Causes
HIGH SIDE DRIVER CIRCUIT OPEN/HIGH RESISTANCE LOW SIDE DRIVER CIRCUIT OPEN/HIGH RESISTANCE HIGH SIDE DRIVER CIRCUIT SHORTED TO GROUND LOW SIDE DRIVER CIRCUIT SHORTED TO GROUND HIGH SIDE DRIVER CIRCUIT SHORTED TO VOLTAGE
LOW SIDE DRIVER CIRCUIT SHORTED TO VOLTAGE
DRIVER CIRCUITS SHORTED TOGETHER
FUEL INJECTOR
POWERTRAIN CONTROL MODULE (PCM)

Always perform the Pre-Diagnostic Troubleshooting procedure before proceeding. Refer to PRE-DIAGNOSTIC TROUBLESHOOTING PROCEDURE - 6.7L .

DIAGNOSTIC TEST

1. **ACTIVE DTC**
    1. Ignition on, engine not running.
    2. With the scan tool check for active DTCs.

       Is the DTC active?

       Yes

- Go To 2.

No

- Perform the INTERMITTENT CONDITION - 6.7L diagnostic procedure. Refer to **INTERMITTENT CONDITION - 6.7L** .

2. **CHECK EACH FUEL INJECTOR CIRCUIT FOR AN OPEN/HIGH RESISTANCE**
   1. Turn the ignition off.
   2. Disconnect the PCM C1 harness connector.
   3. Measure the resistance between the:
      - (K14) Fuel Injector 4 High Side Driver circuit and the (K611) Fuel Injector 4 Low Side Driver circuit at the PCM C1 harness connector.
      - (K38) Fuel Injector 5 High Side Driver circuit and the (K612) Fuel Injector 5 Low Side Driver circuit at the PCM C1 harness connector.
      - (K58) Fuel Injector 6 High Side Driver circuit and the (K613) Fuel Injector 6 Low Side Driver circuit at the PCM C1 harness connector.

NOTE: **Be sure to zero the Ohm meter prior to checking the Fuel Injector circuit. Resistance reading should be between 0-1 Ohm.**

Is the resistance between 0-1 Ohm on all circuits?

Yes

- Go To 3.

No

- Go To 8.

3. **CHECK EACH FUEL INJECTOR CIRCUIT FOR A SHORTED TO GROUND**
   1. Measure the resistance between ground and the:
      - (K14) Fuel Injector 4 High Side Driver circuit at the PCM C1 harness connector.
      - (K38) Fuel Injector 5 High Side Driver circuit at the PCM C1 harness connector.
      - (K58) Fuel Injector 6 High Side Driver circuit at the PCM C1 harness connector.

NOTE: **There should be no continuity between the circuit and ground.**

Is the resistance below 10k Ohms on any circuit?

Yes

- Go To 12.

No

- Go To 4.

4. **CHECK EACH FUEL INJECTOR CIRCUIT FOR A SHORTED TO VOLTAGE**
   1. Turn Ignition on.
   2. Measure the voltage on the:
      - (K14) Fuel Injector 4 High Side Driver circuit at the PCM C1 harness connector.
      - (K38) Fuel Injector 5 High Side Driver circuit at the PCM C1 harness connector.
      - (K58) Fuel Injector 6 High Side Driver circuit at the PCM C1 harness connector.

   NOTE: There should be no voltage present.

   Is there voltage present on any circuit?

   Yes

   - Go To 6.

   No

   - Go To 5.

5. **CHECK FOR THE DRIVER CIRCUITS SHORTED TOGETHER**
   1. Turn ignition off.
   2. Disconnect all bank 2 Fuel Injector wires at the Fuel Injectors.
   3. Measure the resistance between all bank 2 Driver circuits at the PCM C1 harness connector.

   Is the resistance below 10k Ohms between any Driver circuits?

   Yes

   - Repair the Driver circuits that are shorted together.
   - Perform the POWERTRAIN VERIFICATION TEST - 6.7L. Refer to **POWERTRAIN VERIFICATION TEST - 6.7L** .

   No

   - Replace the Powertrain Control Module in accordance with the service information.
   - Perform the POWERTRAIN VERIFICATION TEST - 6.7L. Refer to **POWERTRAIN VERIFICATION TEST - 6.7L** .

6. **CHECK THE HIGH SIDE DRIVER CIRCUIT FOR A SHORT TO VOLTAGE**

   NOTE: Perform the following tests on the Fuel Injector circuit which was faulty.

1. Turn the ignition off.
2. Disconnect Fuel Injector wires at the Fuel Injector.
3. Turn the ignition on.
4. Measure the voltage of the High Side Driver circuit at the PCM C1 harness connector.

   Is there any voltage present?

   Yes

   - Repair the High Side Driver circuit for a short to voltage.
   - Perform the POWERTRAIN VERIFICATION TEST - 6.7L. Refer to **POWERTRAIN VERIFICATION TEST - 6.7L** .

   No

   - Go To 7.

7. **CHECK THE LOW SIDE DRIVER CIRCUIT FOR A SHORT TO VOLTAGE**
   1. Measure the voltage of the Low Side Driver circuit at the PCM C1 harness connector.

      Is there any voltage present?

      Yes

      - Repair the Low Side Driver circuit for a short to voltage.
      - Perform the POWERTRAIN VERIFICATION TEST - 6.7L. Refer to **POWERTRAIN VERIFICATION TEST - 6.7L** .

      No

      - Test complete. Perform the INTERMITTENT CONDITION - 6.7L diagnostic procedure. Refer to **INTERMITTENT CONDITION - 6.7L** .

8. **CHECK THE VALVE COVER PASS THROUGH HARNESS CIRCUIT**

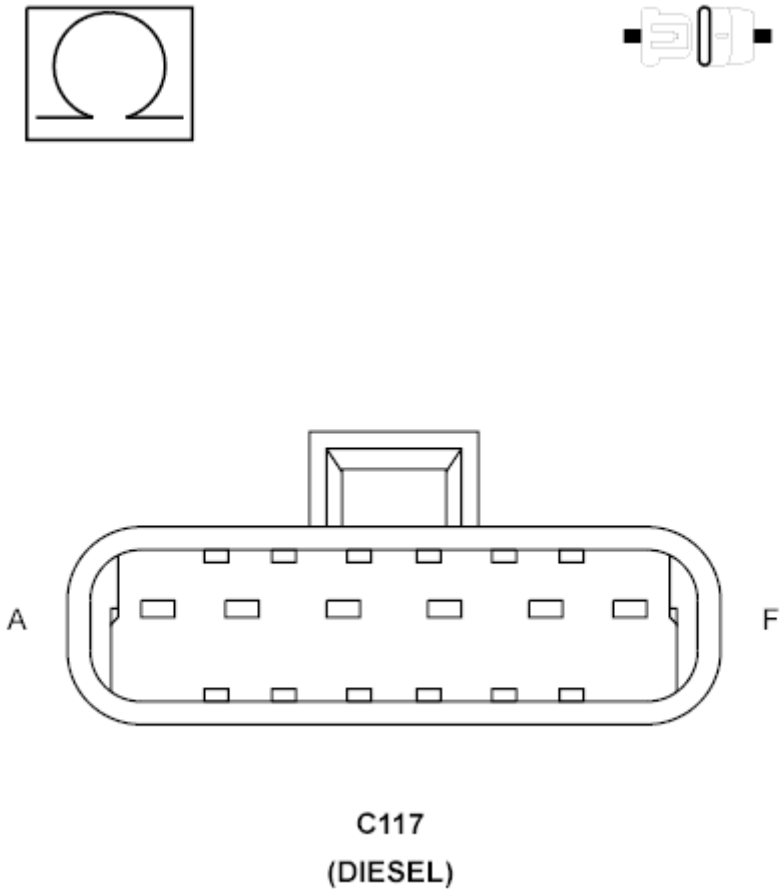

Fig. 84: Checking Valve Cover Pass Through Harness Circuits
Courtesy of CHRYSLER GROUP, LLC

NOTE: Perform the following tests on the Fuel Injector circuit which was faulty.

1. Disconnect the Valve Cover Pass Through harness connector.
2. Measure the resistance between Low Side Driver circuit and the High Side Driver circuit at the Valve Cover Pass Through connector terminals.

NOTE: Be sure to zero the Ohm meter prior to checking the Fuel Injector circuit.

Is the resistance between 0-1 Ohm?

Yes

- Go To 9.

No

- Go To 11.

9. **CHECK THE HIGH SIDE CIRCUITS IN ENGINE HARNESS**
    1. Measure the resistance of the High Side Driver circuit between the Valve Cover Pass Through harness connector and the PCM C1 harness connector.

    NOTE: **Be sure to zero the Ohm meter prior to checking the Fuel Injector circuit.**

    Is the resistance between 0-1 Ohm?

    Yes

    - Go To 10.

    No

    - Repair the High Side Driver circuit for an open or high resistance.
    - Perform the POWERTRAIN VERIFICATION TEST - 6.7L. Refer to **POWERTRAIN VERIFICATION TEST - 6.7L** .

10. **CHECK THE LOW SIDE CIRCUITS IN ENGINE HARNESS**
    1. Measure the resistance of the Low Side Driver circuit between the Valve Cover Pass Through harness connector and the PCM C1 harness connector.

    NOTE: **Be sure to zero the Ohm meter prior to checking the Fuel Injector circuit.**

    Is the resistance between 0-1 Ohm?

    Yes

    - Test complete. Perform the INTERMITTENT CONDITION - 6.7L diagnostic procedure. Refer to **INTERMITTENT CONDITION - 6.7L** .

    No

    - Repair the Low Side Driver circuit for an open or high resistance.
    - Perform the POWERTRAIN VERIFICATION TEST - 6.7L. Refer to **POWERTRAIN VERIFICATION TEST - 6.7L** .

11. **CHECK FUEL INJECTORS**
    1. Disconnect all bank 2 Fuel Injector wires at the Fuel Injectors.
    2. Measure the resistance across the terminals at the Fuel Injector.

    NOTE: **Be sure to zero the Ohm meter prior to checking the Fuel Injector circuit.**

Is the resistance between 0-1 Ohm?

Yes

- Replace the Valve Cover Pass Through harness in accordance with the service information.
- Perform the POWERTRAIN VERIFICATION TEST - 6.7L. Refer to **POWERTRAIN VERIFICATION TEST - 6.7L** .

No

- Replace the Fuel Injector in accordance with the service information.
- Perform the POWERTRAIN VERIFICATION TEST - 6.7L. Refer to **POWERTRAIN VERIFICATION TEST - 6.7L** .

12. **CHECK FOR THE DRIVER CIRCUITS SHORTED TOGETHER**
    1. Disconnect all bank 2 Fuel Injector wires at the Fuel Injectors.
    2. Measure the resistance between all bank 2 Driver circuits at the PCM C1 harness connector.

    Is the resistance below 10k Ohms between any circuits?

    Yes

    - Go To 13.

    No

    - Go To 14.
13. **CHECK THE VALVE COVER PASS THROUGH HARNESS CIRCUITS**

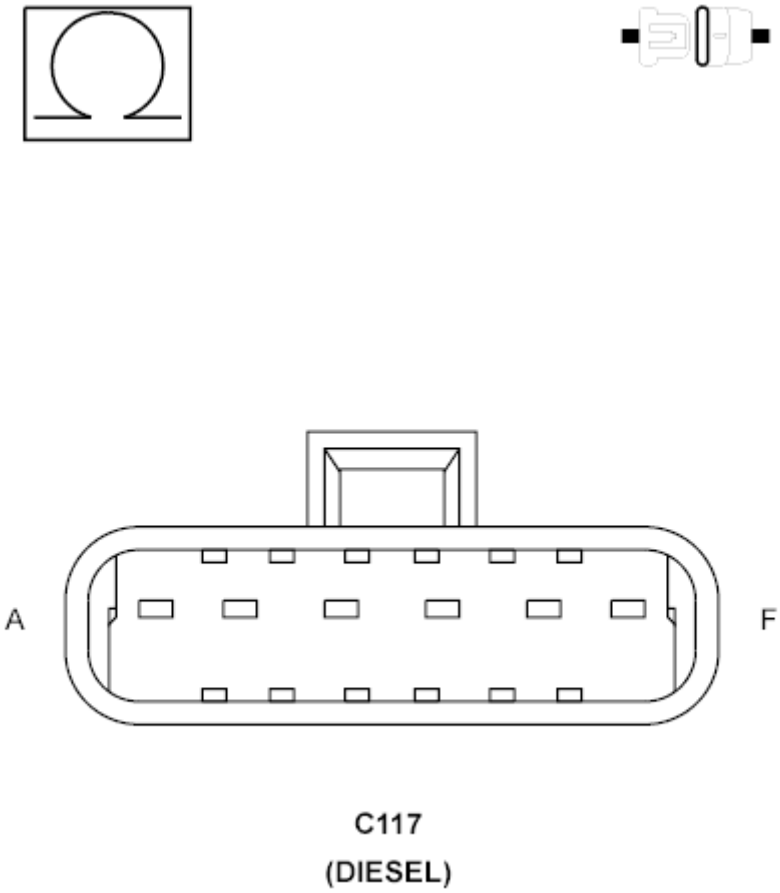

Fig. 85: Checking Valve Cover Pass Through Harness Circuits
Courtesy of CHRYSLER GROUP, LLC

1. Disconnect the Valve Cover Pass Through harness connector.
2. Measure the resistance between all bank 2 Driver circuits of the Valve Cover Pass Through connector terminals.

   Is the resistance below 10k Ohms between any circuits?

   Yes

   - Replace the Valve Cover Pass Through harness in accordance with the service information.
   - Perform the POWERTRAIN VERIFICATION TEST - 6.7L. Refer to **POWERTRAIN VERIFICATION TEST - 6.7L** .

   No

   - Repair the short between the bank 2 Driver circuits in the engine harness.
   - Perform the POWERTRAIN VERIFICATION TEST - 6.7L. Refer to **POWERTRAIN VERIFICATION TEST - 6.7L** .

14. **CHECK THE HIGH SIDE DRIVER CIRCUIT FOR A SHORT TO GROUND**

NOTE: Perform the following tests on the Fuel Injector circuit which was faulty.

1. Disconnect the Valve Cover Pass Through harness connector.
2. Measure the resistance between ground and the High Side Driver circuit at the PCM C1 connector.

Is the resistance below 10k Ohms?

Yes

- Repair the High Side Driver circuit for a short to ground.
- Perform the POWERTRAIN VERIFICATION TEST - 6.7L. Refer to **POWERTRAIN VERIFICATION TEST - 6.7L** .

No

- Go To 15.

15. **CHECK THE LOW SIDE DRIVER CIRCUIT FOR A SHORT TO GROUND**

1. Measure the resistance between ground and the Low Side Driver circuit at the PCM C1 connector.

Is the resistance below 10k Ohms?

Yes

- Repair the Low Side Driver circuit for a short to ground.
- Perform the POWERTRAIN VERIFICATION TEST - 6.7L. Refer to **POWERTRAIN VERIFICATION TEST - 6.7L** .

No

- Go To 16.

16. **CHECK THE FUEL INJECTORS**

1. Measure the resistance between ground and one of the Fuel Injector terminals.

Is the resistance below 10k Ohms?

Yes

- Replace the Fuel Injector in accordance with the service information.
- Perform the POWERTRAIN VERIFICATION TEST - 6.7L. Refer to **POWERTRAIN VERIFICATION TEST - 6.7L** .

No

- Replace the Valve Cover Pass Through harness in accordance with the service information.
- Perform the POWERTRAIN VERIFICATION TEST - 6.7L. Refer to **POWERTRAIN VERIFICATION TEST - 6.7L** .

P020A-FUEL INJECTOR 1 PERFORMANCE

For a complete wiring diagram, **refer to appropriate SYSTEM WIRING DIAGRAMS article** .

THEORY OF OPERATION

The Powertrain Control Module (PCM) can detect when unintended fuel injection occurs by monitoring fuel rail pressure and engine speed. If this condition occurs, the engine will typically die and not start. There will be exhaust smoke during cranking and no fuel rail pressure will be developed during cranking. This DTC will be active during cranking if this condition exists. Progressive cylinder damage may occur if the engine is operated for an extended period of time with this condition. This fault code is logged when the PCM determines that unintended fuel injection has occurred.

WHEN MONITORED:

While the engine is running.

SET CONDITION:

When the PCM determines that unintended fuel injection has occurred.

POSSIBLE CAUSES

Possible Causes
ENGINE MECHANICAL FAILURE
FUEL INJECTOR

Always perform the Pre-Diagnostic Troubleshooting procedure before proceeding. Refer to PRE-DIAGNOSTIC TROUBLESHOOTING PROCEDURE - 6.7L .

DIAGNOSTIC TEST

1. **ACTIVE DTC**
    1. Engine running.
    2. With the scan tool check for active DTCs and listen for an engine knock.

       Is the DTC active and engine knocking?

       Yes

       - Go To 2.

No

- Perform the INTERMITTENT CONDITION - 6.7L diagnostic procedure. Refer to **INTERMITTENT CONDITION - 6.7L** .

2. **CHECKING FOR A LEAKING FUEL INJECTOR**
   1. Turn the ignition off.
   2. Use the fuel system leak tester blocking tool to block off Fuel Injector 1.
   3. Start the engine and let idle for one minute.

   Does the knock go away and P020A become inactive?

   Yes

   - Replace the Fuel Injector. If this DTC was accompanied by a Crankcase Pressure Sensor DTC, damage to cylinder may have occurred.
   - Perform the POWERTRAIN VERIFICATION TEST - 6.7L. Refer to **POWERTRAIN VERIFICATION TEST - 6.7L** .

   No

   - Diagnose engine for a mechanical failure.
   - Perform the POWERTRAIN VERIFICATION TEST - 6.7L. Refer to **POWERTRAIN VERIFICATION TEST - 6.7L** .

P020B-FUEL INJECTOR 2 PERFORMANCE

For a complete wiring diagram, **refer to appropriate SYSTEM WIRING DIAGRAMS article** .

THEORY OF OPERATION

The Powertrain Control Module (PCM) can detect when unintended fuel injection occurs by monitoring fuel rail pressure and engine speed. If this condition occurs, the engine will typically die and not start. There will be exhaust smoke during cranking and no fuel rail pressure will be developed during cranking. This DTC will be active during cranking if this condition exists. Progressive cylinder damage may occur if the engine is operated for an extended period of time with this condition. This fault code is logged when the PCM determines that unintended fuel injection has occurred.

WHEN MONITORED:

While the engine is running.

SET CONDITION:

When the PCM determines that unintended fuel injection has occurred.

POSSIBLE CAUSES

Possible Causes
ENGINE MECHANICAL FAILURE
FUEL INJECTOR

Always perform the Pre-Diagnostic Troubleshooting procedure before proceeding. Refer to PRE-DIAGNOSTIC TROUBLESHOOTING PROCEDURE - 6.7L .

DIAGNOSTIC TEST

1. **ACTIVE DTC**
    1. Engine running.
    2. With the scan tool check for active DTCs and listen for an engine knock.

       Is the DTC active and engine knocking?

       Yes

       - Go To 2.

       No

       - Perform the INTERMITTENT CONDITION - 6.7L diagnostic procedure. Refer to **INTERMITTENT CONDITION - 6.7L** .
2. **CHECKING FOR A LEAKING FUEL INJECTOR**
    1. Turn the ignition off.
    2. Use the fuel system leak tester blocking tool to block off Fuel Injector 2.
    3. Start the engine and let idle for one minute.

       Does the knock go away and P020A become inactive?

       Yes

       - Replace the Fuel Injector. If this DTC was accompanied by a Crankcase Pressure Sensor DTC, damage to cylinder may have occurred.
       - Perform the POWERTRAIN VERIFICATION TEST - 6.7L. Refer to **POWERTRAIN VERIFICATION TEST - 6.7L** .

       No

       - Diagnose engine for a mechanical failure.
       - Perform the POWERTRAIN VERIFICATION TEST - 6.7L. Refer to **POWERTRAIN VERIFICATION TEST - 6.7L** .

P020C-FUEL INJECTOR 3 PERFORMANCE

For a complete wiring diagram, **refer to appropriate SYSTEM WIRING DIAGRAMS article** .

THEORY OF OPERATION

The Powertrain Control Module (PCM) can detect when unintended fuel injection occurs by monitoring fuel rail pressure and engine speed. If this condition occurs, the engine will typically die and not start. There will be exhaust smoke during cranking and no fuel rail pressure will be developed during cranking. This DTC will be active during cranking if this condition exists. Progressive cylinder damage may occur if the engine is operated for an extended period of time with this condition. This fault code is logged when the PCM determines that unintended fuel injection has occurred.

WHEN MONITORED:

While the engine is running.

SET CONDITION:

When the PCM determines that unintended fuel injection has occurred.

POSSIBLE CAUSES

Possible Causes
ENGINE MECHANICAL FAILURE
FUEL INJECTOR

Always perform the Pre-Diagnostic Troubleshooting procedure before proceeding. Refer to PRE-DIAGNOSTIC TROUBLESHOOTING PROCEDURE - 6.7L .

DIAGNOSTIC TEST

1. **ACTIVE DTC**
    1. Engine running.
    2. With the scan tool check for active DTCs and listen for an engine knock.

       Is the DTC active and engine knocking?

       Yes

       - Go To 2.

       No

       - Perform the INTERMITTENT CONDITION - 6.7L diagnostic procedure. Refer to **INTERMITTENT CONDITION - 6.7L** .
2. **CHECKING FOR A LEAKING FUEL INJECTOR**
    1. Turn the ignition off.

2. Use the fuel system leak tester blocking tool to block off Fuel Injector 3.
3. Start the engine and let idle for one minute.

   Does the knock go away and P020A become inactive?

   Yes

   - Replace the Fuel Injector. If this DTC was accompanied by a Crankcase Pressure Sensor DTC, damage to cylinder may have occurred.
   - Perform the POWERTRAIN VERIFICATION TEST - 6.7L. Refer to **POWERTRAIN VERIFICATION TEST - 6.7L** .

   No

   - Diagnose engine for a mechanical failure.
   - Perform the POWERTRAIN VERIFICATION TEST - 6.7L. Refer to **POWERTRAIN VERIFICATION TEST - 6.7L** .

P020D-FUEL INJECTOR 4 PERFORMANCE

For a complete wiring diagram, **refer to appropriate SYSTEM WIRING DIAGRAMS article** .

THEORY OF OPERATION

The Powertrain Control Module (PCM) can detect when unintended fuel injection occurs by monitoring fuel rail pressure and engine speed. If this condition occurs, the engine will typically die and not start. There will be exhaust smoke during cranking and no fuel rail pressure will be developed during cranking. This DTC will be active during cranking if this condition exists. Progressive cylinder damage may occur if the engine is operated for an extended period of time with this condition. This fault code is logged when the PCM determines that unintended fuel injection has occurred.

WHEN MONITORED:

While the engine is running.

SET CONDITION:

When the PCM determines that unintended fuel injection has occurred.

POSSIBLE CAUSES

Possible Causes
ENGINE MECHANICAL FAILURE
FUEL INJECTOR

Always perform the Pre-Diagnostic Troubleshooting procedure before proceeding. Refer to PRE-

DIAGNOSTIC TROUBLESHOOTING PROCEDURE - 6.7L .

DIAGNOSTIC TEST

1. **ACTIVE DTC**
    1. Engine running.
    2. With the scan tool check for active DTCs and listen for an engine knock.

       Is the DTC active and engine knocking?

       Yes

       - Go To 2.

       No

       - Perform the INTERMITTENT CONDITION - 6.7L diagnostic procedure. Refer to **INTERMITTENT CONDITION - 6.7L** .
2. **CHECKING FOR A LEAKING FUEL INJECTOR**
    1. Turn the ignition off.
    2. Use the fuel system leak tester blocking tool to block off Fuel Injector 4.
    3. Start the engine and let idle for one minute.

       Does the knock go away and P020A become inactive?

       Yes

       - Replace the Fuel Injector. If this DTC was accompanied by a Crankcase Pressure Sensor DTC, damage to cylinder may have occurred.
       - Perform the POWERTRAIN VERIFICATION TEST - 6.7L. Refer to **POWERTRAIN VERIFICATION TEST - 6.7L** .

       No

       - Diagnose engine for a mechanical failure.
       - Perform the POWERTRAIN VERIFICATION TEST - 6.7L. Refer to **POWERTRAIN VERIFICATION TEST - 6.7L** .

P020E-FUEL INJECTOR 5 PERFORMANCE

For a complete wiring diagram, **refer to appropriate SYSTEM WIRING DIAGRAMS article** .

THEORY OF OPERATION

The Powertrain Control Module (PCM) can detect when unintended fuel injection occurs by monitoring fuel

rail pressure and engine speed. If this condition occurs, the engine will typically die and not start. There will be exhaust smoke during cranking and no fuel rail pressure will be developed during cranking. This DTC will be active during cranking if this condition exists. Progressive cylinder damage may occur if the engine is operated for an extended period of time with this condition. This fault code is logged when the PCM determines that unintended fuel injection has occurred.

WHEN MONITORED:

While the engine is running.

SET CONDITION:

When the PCM determines that unintended fuel injection has occurred.

POSSIBLE CAUSES

Possible Causes
ENGINE MECHANICAL FAILURE
FUEL INJECTOR

Always perform the Pre-Diagnostic Troubleshooting procedure before proceeding. Refer to PRE-DIAGNOSTIC TROUBLESHOOTING PROCEDURE - 6.7L .

DIAGNOSTIC TEST

1. **ACTIVE DTC**
    1. Engine running.
    2. With the scan tool check for active DTCs and listen for an engine knock.

       Is the DTC active and engine knocking?

       Yes

       - Go To 2.

       No

       - Perform the INTERMITTENT CONDITION - 6.7L diagnostic procedure. Refer to **INTERMITTENT CONDITION - 6.7L** .
2. **CHECKING FOR A LEAKING FUEL INJECTOR**
    1. Turn the ignition off.
    2. Use the fuel system leak tester blocking tool to block off Fuel Injector 5.
    3. Start the engine and let idle for one minute.

       Does the knock go away and P020A become inactive?

Yes

- Replace the Fuel Injector. If this DTC was accompanied by a Crankcase Pressure Sensor DTC, damage to cylinder may have occurred.
- Perform the POWERTRAIN VERIFICATION TEST - 6.7L. Refer to **POWERTRAIN VERIFICATION TEST - 6.7L** .

No

- Diagnose engine for a mechanical failure.
- Perform the POWERTRAIN VERIFICATION TEST - 6.7L. Refer to **POWERTRAIN VERIFICATION TEST - 6.7L** .

P020F-FUEL INJECTOR 6 PERFORMANCE

For a complete wiring diagram, **refer to appropriate SYSTEM WIRING DIAGRAMS article** .

THEORY OF OPERATION

The Powertrain Control Module (PCM) can detect when unintended fuel injection occurs by monitoring fuel rail pressure and engine speed. If this condition occurs, the engine will typically die and not start. There will be exhaust smoke during cranking and no fuel rail pressure will be developed during cranking. This DTC will be active during cranking if this condition exists. Progressive cylinder damage may occur if the engine is operated for an extended period of time with this condition. This fault code is logged when the PCM determines that unintended fuel injection has occurred.

WHEN MONITORED:

While the engine is running.

SET CONDITION:

When the PCM determines that unintended fuel injection has occurred.

POSSIBLE CAUSES

Possible Causes
ENGINE MECHANICAL FAILURE
FUEL INJECTOR

Always perform the Pre-Diagnostic Troubleshooting procedure before proceeding. Refer to PRE-DIAGNOSTIC TROUBLESHOOTING PROCEDURE - 6.7L .

DIAGNOSTIC TEST

1. **ACTIVE DTC**
    1. Engine running.

2. With the scan tool check for active DTCs and listen for an engine knock.

   Is the DTC active and engine knocking?

   Yes

   - Go To 2.

   No

   - Perform the INTERMITTENT CONDITION - 6.7L diagnostic procedure. Refer to **INTERMITTENT CONDITION - 6.7L** .

2. **CHECKING FOR A LEAKING FUEL INJECTOR**
   1. Turn the ignition off.
   2. Use the fuel system leak tester blocking tool to block off Fuel Injector 6.
   3. Start the engine and let idle for one minute.

      Does the knock go away and P020A become inactive?

      Yes

      - Replace the Fuel Injector. If this DTC was accompanied by a Crankcase Pressure Sensor DTC, damage to cylinder may have occurred.
      - Perform the POWERTRAIN VERIFICATION TEST - 6.7L. Refer to **POWERTRAIN VERIFICATION TEST - 6.7L** .

      No

      - Diagnose engine for a mechanical failure.
      - Perform the POWERTRAIN VERIFICATION TEST - 6.7L. Refer to **POWERTRAIN VERIFICATION TEST - 6.7L** .

P0217-COOLANT TEMPERATURE TOO HIGH

For a complete wiring diagram, **refer to appropriate SYSTEM WIRING DIAGRAMS article** .

THEORY OF OPERATION

The Coolant Temperature Sensor is a variable resistor sensor and is used to measure the temperature of the coolant of the engine. The PCM supplies 5-Volts to the Engine Coolant Temperature Sensor (ECT) Signal circuit. The PCM monitors the change in voltage caused by changes in the resistance of the sensor to determine the coolant temperature. The engine coolant temperature value is used by the PCM for the engine protection system and engine emissions control. The Engine Coolant Temperature Sensor is located near the thermostat housing. This fault becomes active when the PCM detects a coolant temperature higher than a calibrated limit for a calibrated amount of time. The PCM illuminates the MIL lamp after the diagnostic runs and fails once. During this time the customer may experience an engine power derate, and regeneration mode will be disabled.

The PCM will turn off the MIL lamp after the diagnostic runs and passes in four consecutive drive cycles.

WHEN MONITORED:

While the engine is running.

SET CONDITION:

The engine coolant temperature is above a calibrated value for a calibrated amount of time.

POSSIBLE CAUSES

Possible Causes
COOLING SYSTEM FAILURE
ECT SENSOR MECHANICAL FAILURE

Always perform the Pre-Diagnostic Troubleshooting procedure before proceeding. Refer to PRE-DIAGNOSTIC TROUBLESHOOTING PROCEDURE - 6.7L .

DIAGNOSTIC TEST

1. **COOLING SYSTEM FAILURE**

   NOTE: If other cooling system DTCs are present, repair those DTCs before proceeding.

   1. Check the engine cooling system operation. Refer to cooling, Diagnosis and Testing, Preliminary check. Refer to **DIAGNOSIS AND TESTING** .

      Is the Cooling system operating normally?

      Yes

      - Go To 2.

      No

      - Repair the cooling system failure.
      - Perform the POWERTRAIN VERIFICATION TEST - 6.7L. Refer to **POWERTRAIN VERIFICATION TEST - 6.7L** .
2. **CHECK THE ECT SENSOR**
   1. Allow the engine to reach normal operating temperature.
   2. Use a temperature probe and measure the engine temperature near the ECT Sensor.
   3. With the scan tool, read the Engine Coolant Temperature.

4. Compare the temperature probe reading with the scan tool reading.

   Are the readings within 10°F of each other?

   Yes

   - Repair the cause of mechanical failure.
   - Perform the POWERTRAIN VERIFICATION TEST - 6.7L. Refer to **POWERTRAIN VERIFICATION TEST - 6.7L** .

   No

   - Replace the Engine Coolant Temperature Sensor in accordance with the service information.
   - Perform the POWERTRAIN VERIFICATION TEST - 6.7L. Refer to **POWERTRAIN VERIFICATION TEST - 6.7L** .

P0219-ENGINE OVERSPEED

For a complete wiring diagram, **refer to appropriate SYSTEM WIRING DIAGRAMS article** .

THEORY OF OPERATION

The Crankshaft Position and Camshaft Position Sensors are hall effect type sensors. The Powertrain Control Module (PCM) provides a 5-Volt supply to the position sensor and return circuit. A notch on the crankshaft gear is used to determine the position of the engine by the PCM. As the notch on the crankshaft speed ring or the windows in the back of the camshaft gear move past the position sensor, a signal is generated on the position sensor circuit. The PCM interprets this signal and converts it to an engine speed. The Powertrain Control Module does not light a MIL for this DTC.

WHEN MONITORED:

While the engine is running.

SET CONDITION:

The Powertrain Control Module (PCM) detects engine speed is above a calibrated threshold.

POSSIBLE CAUSES

Possible Causes
MECHANICAL OVERSPEED OF ENGINE

Always perform the Pre-Diagnostic Troubleshooting procedure before proceeding. Refer to PRE-DIAGNOSTIC TROUBLESHOOTING PROCEDURE - 6.7L .

DIAGNOSTIC TEST

1. **OTHER DTCS**
    1. Turn the ignition on.
    2. With the scan tool, read and record the freeze frame data.
    3. With the scan tool, read the Engine DTCs.

    Are there other Crankshaft Position Sensor DTCs set?

    Yes

    - Repair any other Crankshaft Position Sensor DTCs.

    No

    - Go To 2.
2. **MECHANICAL OVERSPEED OF ENGINE**

NOTE: **The most likely cause of this DTC is a mechanical overspeed. Examples of this could be downshifting into to low of a gear on a manual transmission or pulling a heavy load on a steep downgrade.**

1. Visually inspect the engine for signs of mechanical overspeed. Such as, bent push rod, broken rocker arms, bent valves, flywheel bolts backing out, etc.

    Did you notice any overspeed damage?

    Yes

    - Repair or replace any damaged components.
    - Perform the POWERTRAIN VERIFICATION TEST - 6.7L. Refer to **POWERTRAIN VERIFICATION TEST - 6.7L** .

    No

    - Test Complete.

P0253-INJECTION PUMP FUEL CONTROL CIRCUIT LOW

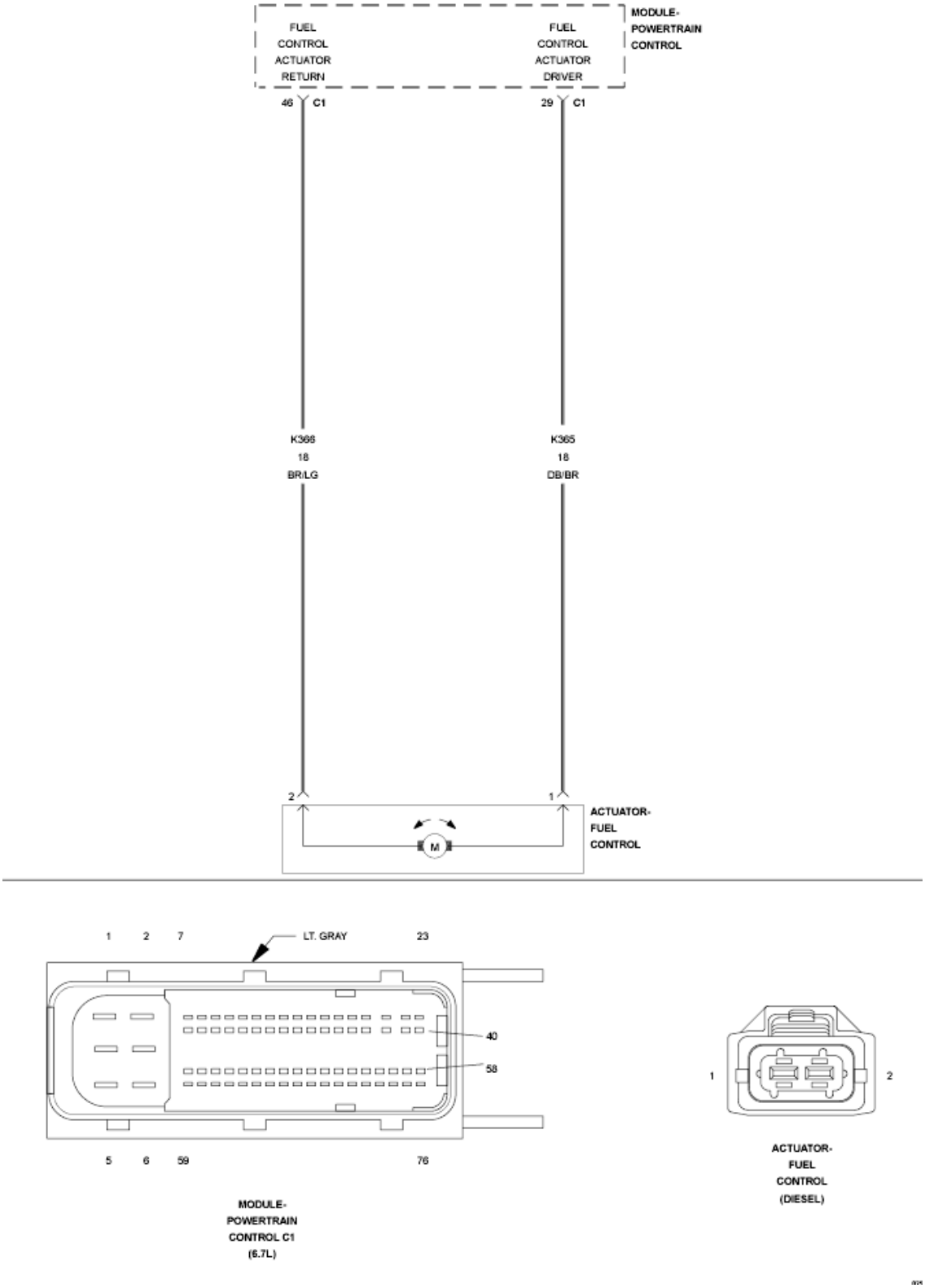

Fig. 86: Fuel Control Actuator Circuit Schematic
Courtesy of CHRYSLER GROUP, LLC

For a complete wiring diagram, **refer to appropriate SYSTEM WIRING DIAGRAMS article** .

THEORY OF OPERATION

The Powertrain Control Module (PCM) provides a PWM driver circuit and ground circuit to the Fuel Control Actuator (FCA). The PCM varies the current to this valve to provide the correct fuel flow to the High Pressure Pump based on operating conditions. The FCA is a normally open valve. High circuit resistance may cause fuel pressure to be higher than commanded at light loads. Excessive current draw or a short circuit will cause the PCM to turn the driver off during the remainder of that ignition cycle. The PCM will not turn the driver back on until the ignition is cycled off, and back on, and the current draw or short circuit is gone. The PCM illuminates the MIL lamp and the ETC lamp immediately after the diagnostic runs and fails. During this time the customer may experience low power. The PCM turns off the MIL lamp after the diagnostic runs and passes in four consecutive drive cycles.

WHEN MONITORED:

Continuously when the engine is running.

SET CONDITION:

The Powertrain Control Module (PCM) does not detect system voltage on the (K366) FCA Driver circuit when the PWM signal is turned on.

POSSIBLE CAUSES

Possible Causes
(K366) FUEL CONTROL ACTUATOR DRIVER CIRCUIT SHORTED TO GROUND
(K366) FCA DRIVER CIRCUIT SHORTED TO THE (K365) FCA RETURN CIRCUIT HIGH PRESSURE FUEL PUMP
POWERTRAIN CONTROL MODULE (PCM)

Always perform the Pre-Diagnostic Troubleshooting procedure before proceeding. Refer to PRE-DIAGNOSTIC TROUBLESHOOTING PROCEDURE - 6.7L .

DIAGNOSTIC TEST

1. **ACTIVE DTC**
    1. Ignition on, engine not running.
    2. Record freeze frame data and clear DTCs.
    3. Turn the ignition off for 75 seconds.
    4. Start the engine and let idle for at least two minutes.
    5. With the scan tool, read DTCs.

    Did the DTC reset?

    Yes

    - Go To 2.

No

- Perform the INTERMITTENT CONDITION - 6.7L diagnostic procedure. Refer to **INTERMITTENT CONDITION - 6.7L** .

2. **CHECK THE (K365) FUEL CONTROL ACTUATOR DRIVER CIRCUIT FOR A SHORT TO GROUND**

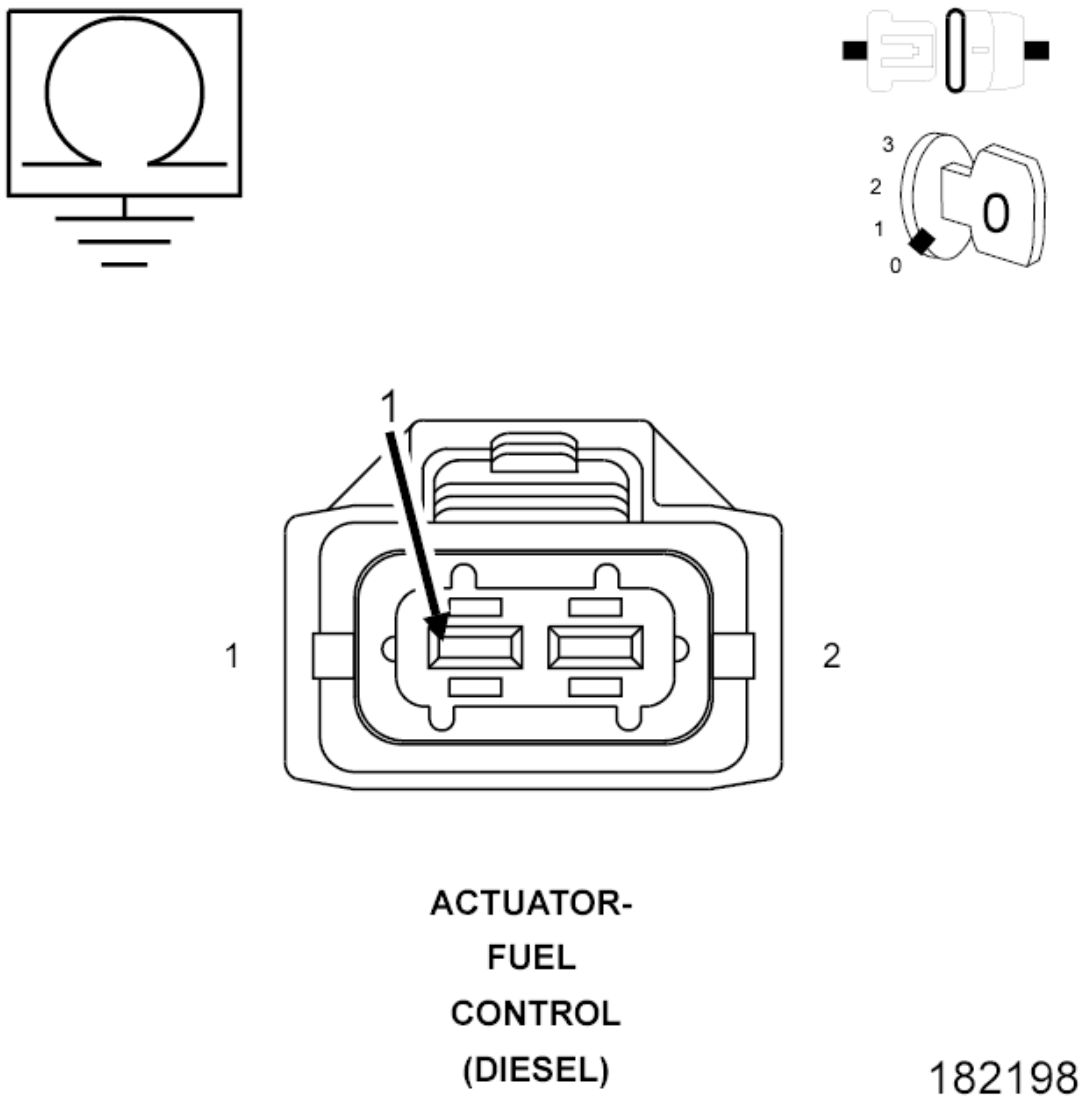

Fig. 87: Checking Fuel Control Actuator Driver Circuit For Short To Ground
Courtesy of CHRYSLER GROUP, LLC

1. Turn the ignition off.
2. Disconnect the PCM C1 harness connector.
3. Disconnect the Fuel Control Actuator harness connector.
4. Measure the resistance between ground and the (K365) FCA Driver circuit at the FCA harness connector.

Is the resistance below 10k Ohms?

Yes

- Repair the (K365) FCA Driver circuit for a short to ground.
- Perform the POWERTRAIN VERIFICATION TEST - 6.7L. Refer to **POWERTRAIN VERIFICATION TEST - 6.7L** .

No

- Go To 3.

3. **CHECK FOR THE (K365) FCA DRIVER CIRCUIT SHORTED TO THE (K366) FCA RETURN CIRCUIT**

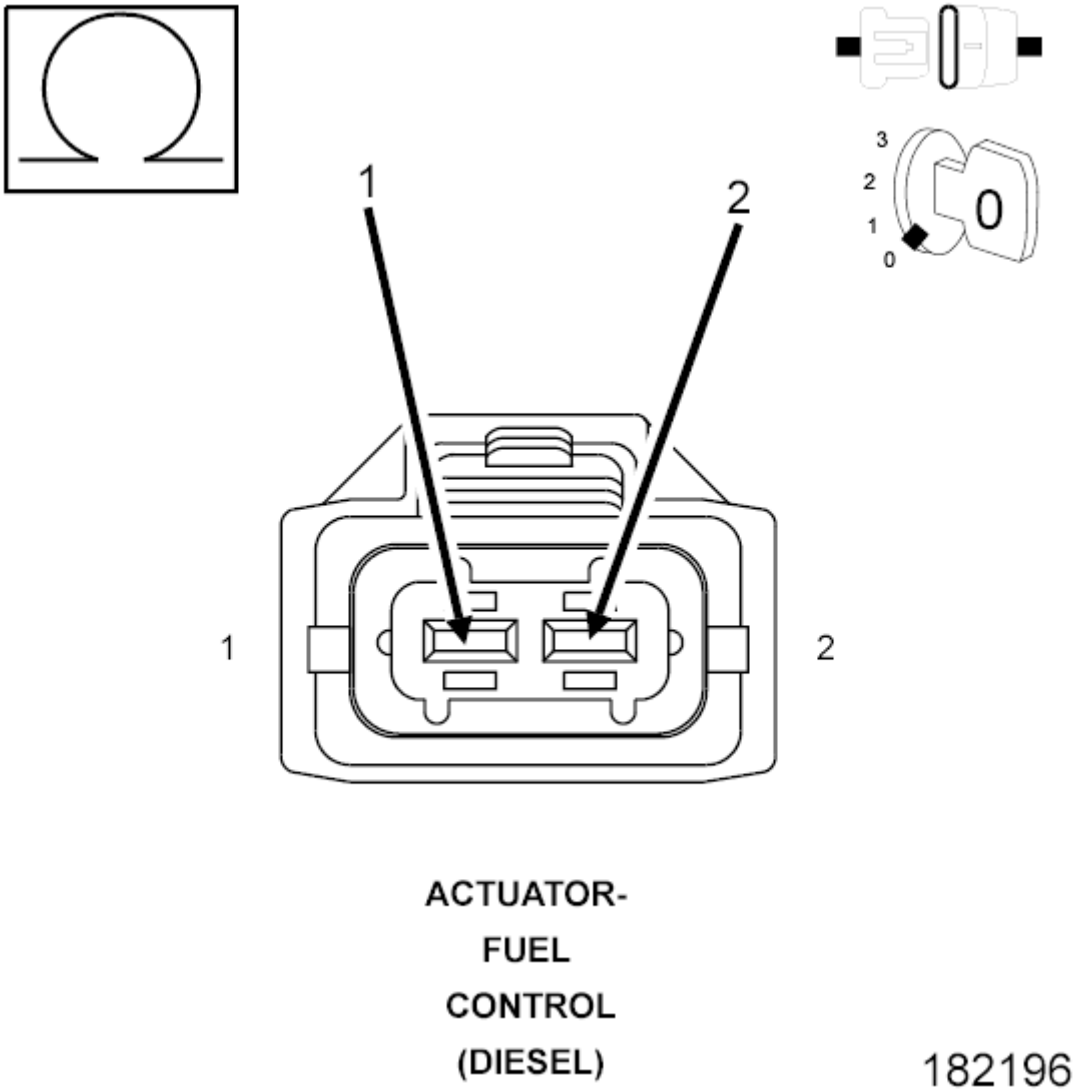

Fig. 88: Checking FCA Return Circuit Shorted To FCA Driver Circuit

1. Measure the Resistance between the (K365) FCA Driver circuit and the (K366) FCA Return circuit at the Fuel Control Actuator harness connector.

   Is the resistance below 10k Ohms?

   Yes

   - Repair the short between the (K365) FCA Driver circuit and the (K366) FCA Return circuit.
   - Perform the POWERTRAIN VERIFICATION TEST - 6.7L. Refer to **POWERTRAIN VERIFICATION TEST - 6.7L** .

   No

   - Go To 4.

4. **FUEL CONTROL ACTUATOR**
   1. Reconnect the PCM C1 harness connector.
   2. Replace the Fuel Control Actuator in accordance with the service information.
   3. Turn the ignition on and clear any DTCs.
   4. Start the engine and allow it to idle for at least two minutes.
   5. With the scan tool, read DTCs.

      Did the DTC reset?

      Yes

      - Replace the Powertrain Control Module in accordance with the service information.
      - Perform the POWERTRAIN VERIFICATION TEST - 6.7L. Refer to **POWERTRAIN VERIFICATION TEST - 6.7L** .

      No

      - Repair complete.
      - Perform the POWERTRAIN VERIFICATION TEST - 6.7L. Refer to **POWERTRAIN VERIFICATION TEST - 6.7L** .

P0254-INJECTION PUMP FUEL CONTROL CIRCUIT HIGH

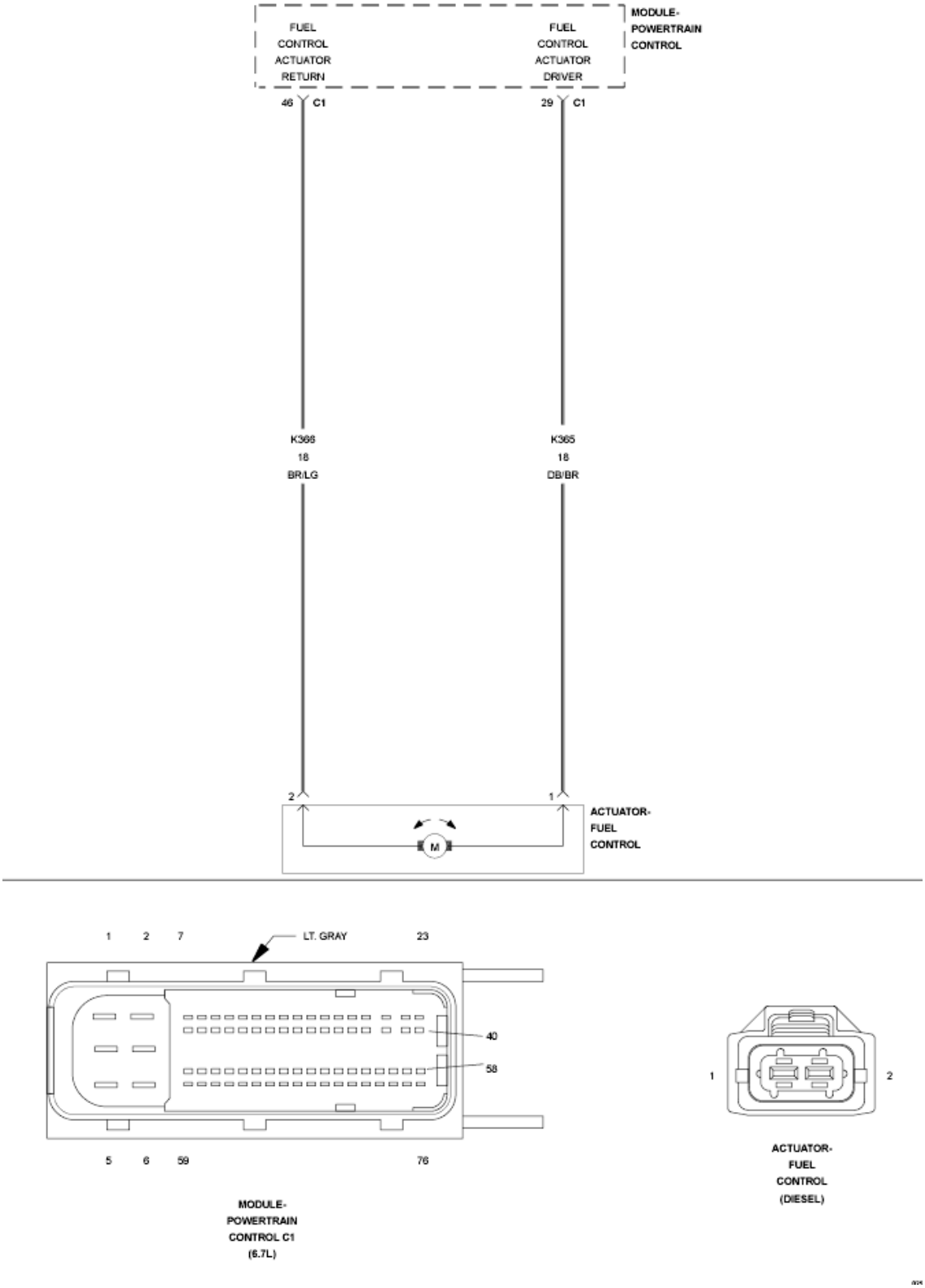

Fig. 89: Fuel Control Actuator Circuit Schematic
Courtesy of CHRYSLER GROUP, LLC

For a complete wiring diagram, **refer to appropriate SYSTEM WIRING DIAGRAMS article** .

THEORY OF OPERATION

The Fuel Control Actuator (FCA) is an electronically controlled solenoid valve. The Powertrain Control Module (PCM) provides a PWM driver circuit and ground circuit to the FCA. The PCM varies the current to this valve to provide the correct fuel flow to the High Pressure Pump based on operating conditions. The FCA is a normally open valve. High circuit resistance may cause fuel pressure to be higher than commanded at light loads. Although this is primarily an electrical diagnostic check, fuel supply issues and high pressure leaks can cause the PCM to force the Fuel Control Actuator into a region where this fault code becomes active. The PCM illuminates the MIL lamp and the ETC lamp immediately after the diagnostic runs and fails. During this time the customer may experience low power. The PCM turns off the MIL lamp after the diagnostic runs and passes in four consecutive drive cycles.

WHEN MONITORED:

Continuously with the engine running.

SET CONDITION:

The Powertrain Control Module (PCM) detects voltage on the (K366) FCA Driver circuit when the PWM signal is turned off.

POSSIBLE CAUSES

Possible Causes
(K366) FUEL CONTROL ACTUATOR DRIVER CIRCUIT SHORTED TO VOLTAGE
(K365) FUEL CONTROL ACTUATOR RETURN CIRCUIT SHORTED TO VOLTAGE
(K366) FUEL CONTROL ACTUATOR DRIVER CIRCUIT OPEN/HIGH RESISTANCE
(K365) FUEL CONTROL ACTUATOR RETURN CIRCUIT OPEN/HIGH RESISTANCE
HIGH PRESSURE FUEL PUMP
POWERTRAIN CONTROL MODULE (PCM)

Always perform the Pre-Diagnostic Troubleshooting procedure before proceeding. Refer to PRE-DIAGNOSTIC TROUBLESHOOTING PROCEDURE - 6.7L .

DIAGNOSTIC TEST

1. **ACTIVE DTC**
    1. Ignition on, engine not running.
    2. Record freeze frame data and clear DTCs.
    3. Turn the ignition off for 75 seconds.
    4. Start the engine and let idle for at least two minutes.
    5. With the scan tool, read DTCs.

    Did the DTC reset?

Yes

- Go To 2.

No

- Perform the INTERMITTENT CONDITION - 6.7L diagnostic procedure. Refer to **INTERMITTENT CONDITION - 6.7L** .

2. **CHECK THE (K365) FUEL CONTROL ACTUATOR DRIVER CIRCUIT FOR A SHORT TO VOLTAGE**

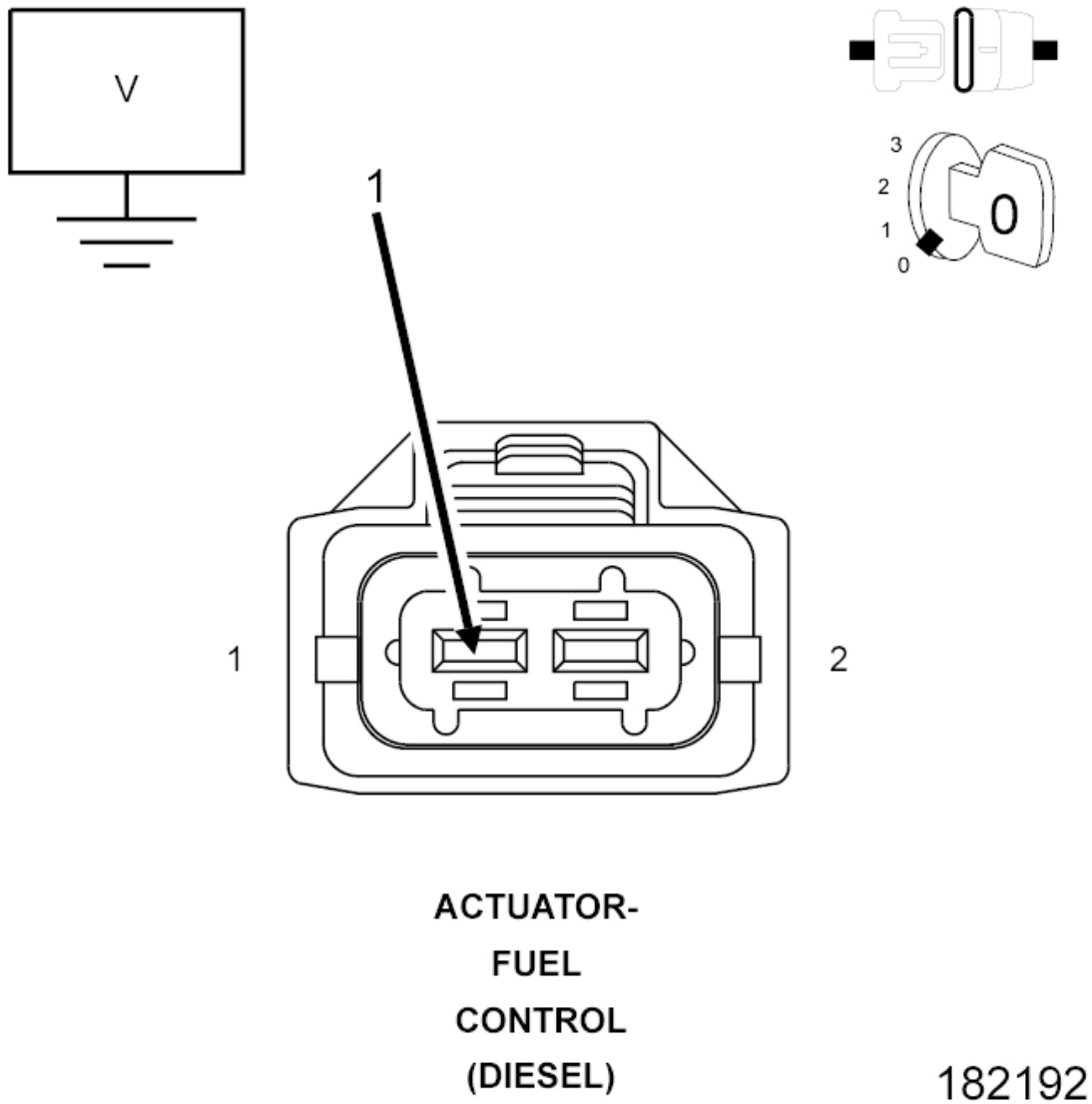

Fig. 90: Checking Fuel Control Actuator Driver Circuit For Short To Voltage
Courtesy of CHRYSLER GROUP, LLC

1. Turn the ignition off.

2. Disconnect the Fuel Control Actuator harness connector.
3. Turn the ignition on.
4. Measure the voltage of the (K365) FCA Driver circuit at the FCA harness connector.

NOTE: The (K365) FCA Driver circuit should read approximately 3.5 Volts.

Is the voltage reading near battery voltage?

Yes

- Repair the (K365) FCA Driver circuit for a short to voltage.
- Perform the POWERTRAIN VERIFICATION TEST - 6.7L. Refer to **POWERTRAIN VERIFICATION TEST - 6.7L** .

No

- Go To 3.

3. **CHECK THE (K366) FUEL CONTROL ACTUATOR RETURN CIRCUIT FOR A SHORT TO VOLTAGE**

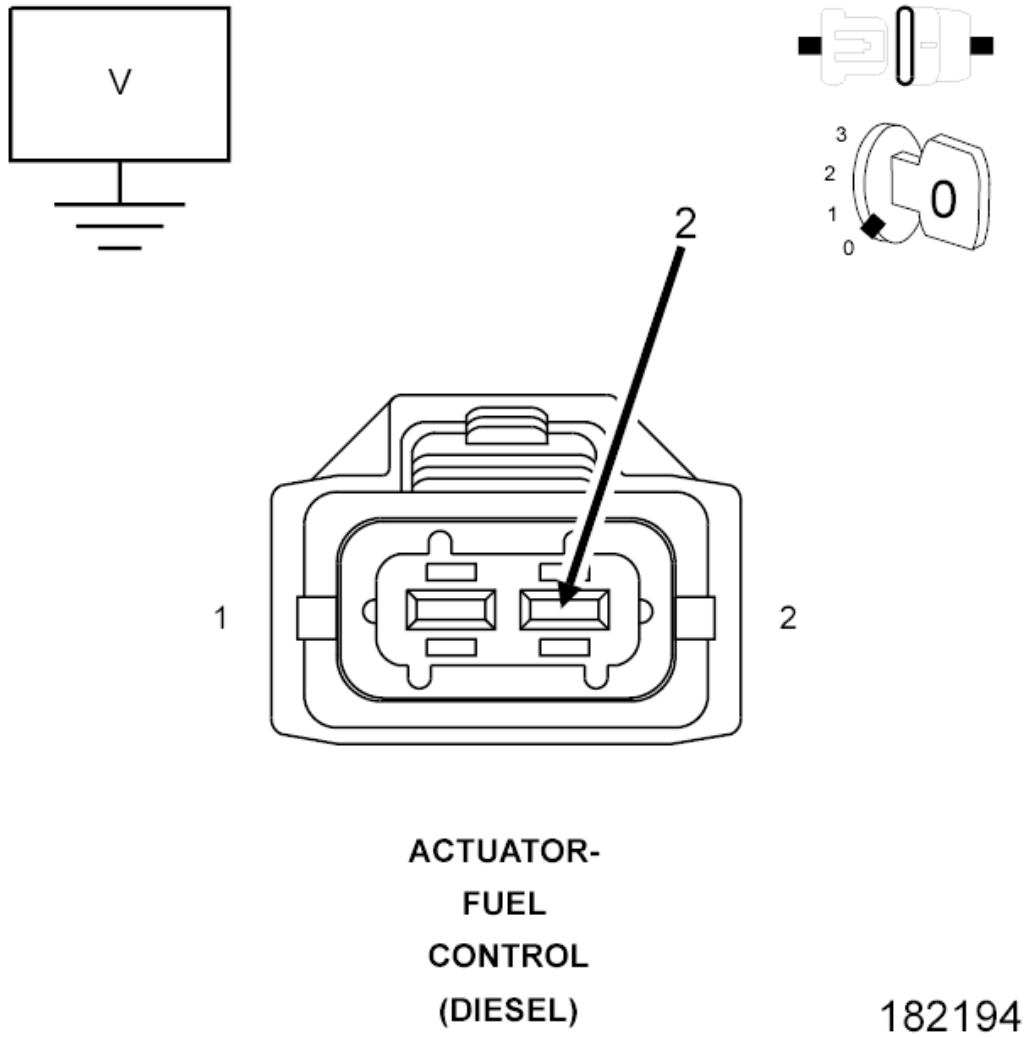

Fig. 91: Checking Fuel Control Actuator Return Circuit For Short To Voltage
Courtesy of CHRYSLER GROUP, LLC

1. Disconnect the PCM C1 harness connector.
2. Measure the voltage of the (K366) FCA Return circuit at the FCA harness connector.

NOTE: The (K366) FCA Return circuit should not have voltage present.

Is there any voltage present?

Yes

- Repair the (K366) FCA Return circuit for a short to voltage.
- Perform the POWERTRAIN VERIFICATION TEST - 6.7L. Refer to **POWERTRAIN VERIFICATION TEST - 6.7L** .

No

- Go To 4.

4. **CHECK THE (K366) FUEL CONTROL ACTUATOR DRIVER CIRCUIT FOR AN OPEN/HIGH RESISTANCE**

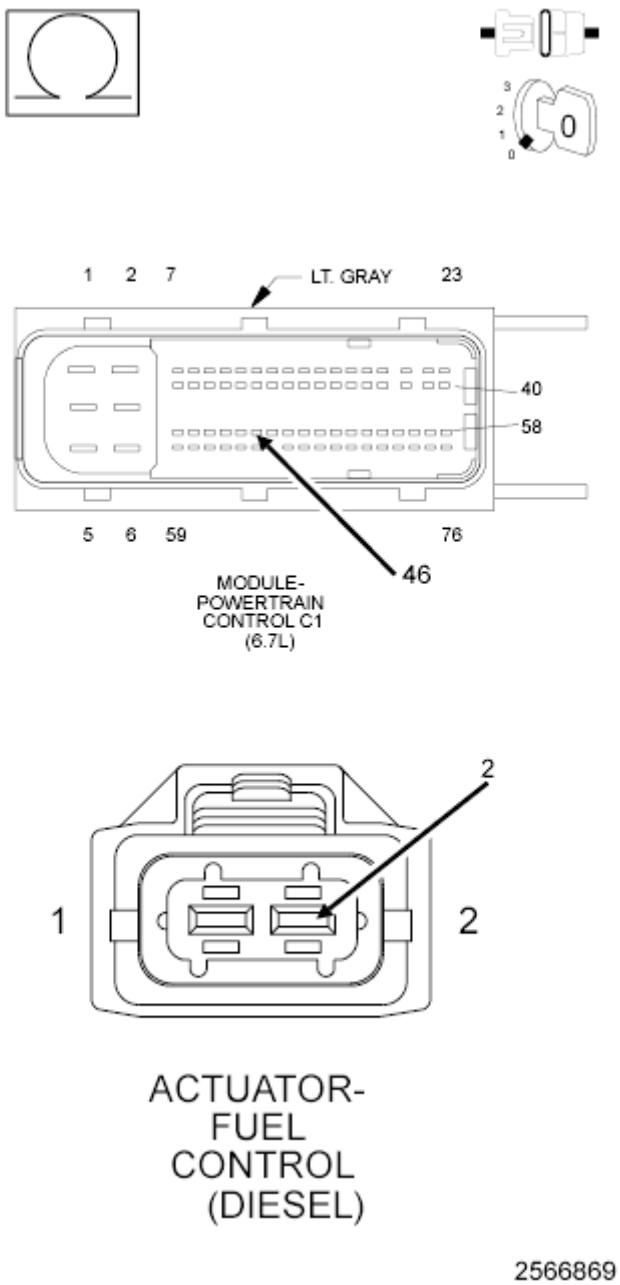

Fig. 92: Checking Fuel Control Actuator Driver Circuit For Open Or High Resistance
Courtesy of CHRYSLER GROUP, LLC

1. Turn the ignition off.
2. Measure the resistance of the (K366) FCA Driver circuit between the FCA harness connector and the PCM C1 harness connector.

Is the resistance below 5.0 Ohms?

Yes

- Go To 5.

No

- Repair the (K366) FCA Driver circuit for an open or high resistance.
- Perform the POWERTRAIN VERIFICATION TEST - 6.7L. Refer to **POWERTRAIN VERIFICATION TEST - 6.7L** .

5. **CHECK THE (K365) FUEL CONTROL ACTUATOR RETURN CIRCUIT FOR AN OPEN/HIGH RESISTANCE**

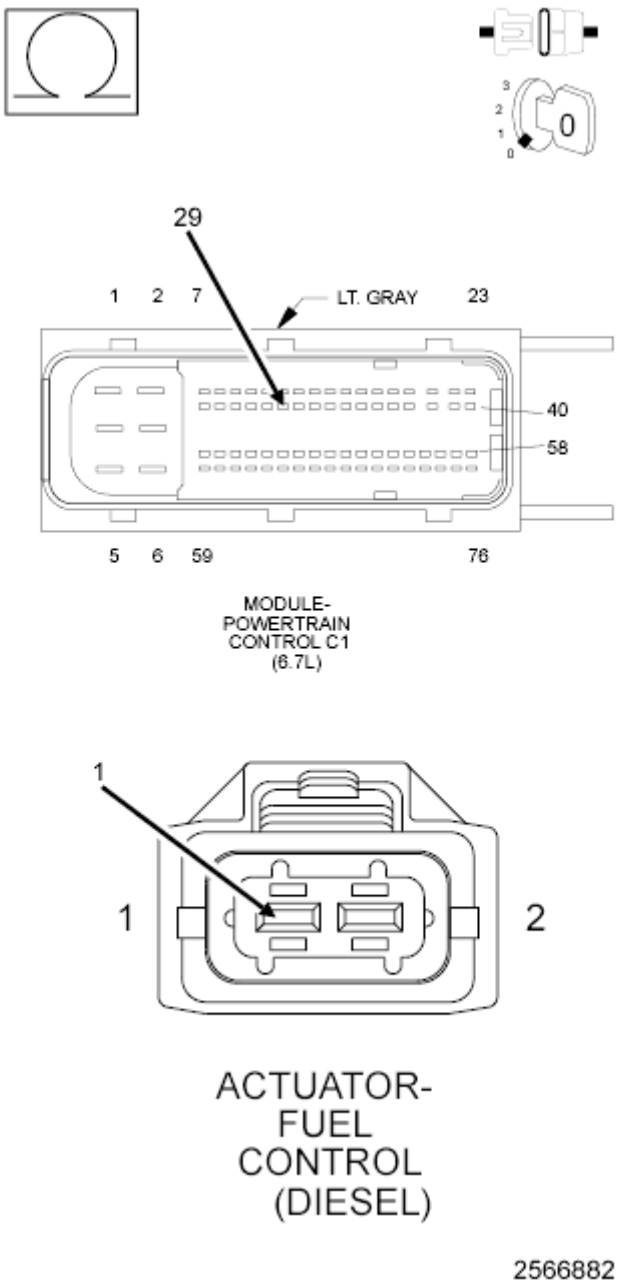

Fig. 93: Checking Fuel Control Actuator Return Circuit For Open Or High Resistance
Courtesy of CHRYSLER GROUP, LLC

1. Measure the resistance of the (K365) FCA Return circuit between the FCA harness connector and the PCM C1 harness connector.

   Is the resistance below 5.0 Ohms?

   Yes

   - Go To 6.

No

- Repair the (K365) FCA Return circuit for an open or high resistance.
- Perform the POWERTRAIN VERIFICATION TEST - 6.7L. Refer to **POWERTRAIN VERIFICATION TEST - 6.7L** .

6. **CHECK THE FUEL CONTROL ACTUATOR**
   1. Turn the ignition off.
   2. Replace the Fuel Control Actuator in accordance with the service information.
   3. Turn the ignition on.
   4. With the scan tool, clear DTCs.
   5. Start the engine.
   6. With the scan tool, view DTCs.

   Did the DTC reset?

   Yes

   - Replace the Powertrain Control Module in accordance with the service information.
   - Perform the POWERTRAIN VERIFICATION TEST - 6.7L. Refer to **POWERTRAIN VERIFICATION TEST - 6.7L** .

   No

   - Test complete.
   - Perform the POWERTRAIN VERIFICATION TEST - 6.7L. Refer to **POWERTRAIN VERIFICATION TEST - 6.7L** .

P0255-INJECTION PUMP FUEL CONTROL CIRCUIT PERFORMANCE

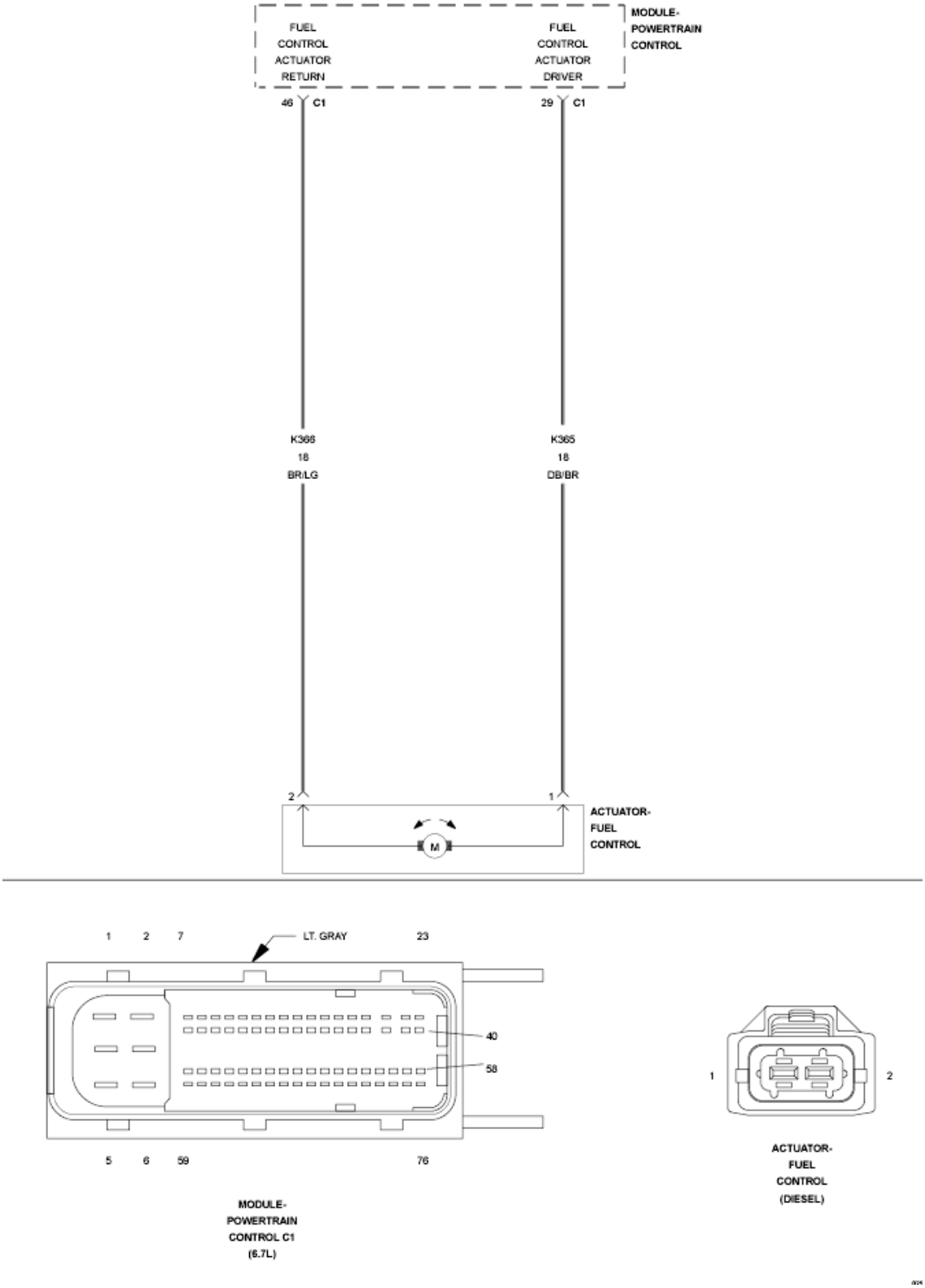

Fig. 94: Fuel Control Actuator Circuit Schematic
Courtesy of CHRYSLER GROUP, LLC

For a complete wiring diagram, **refer to appropriate SYSTEM WIRING DIAGRAMS article** .

THEORY OF OPERATION

The Fuel Control Actuator (FCA) is an electronically controlled solenoid valve. The Powertrain Control Module (PCM) provides a PWM driver circuit and ground circuit to the FCA. The PCM varies the current to this valve to provide the correct fuel flow to the High Pressure Pump based on operating conditions. The FCA is a normally open valve. High circuit resistance may cause fuel pressure to be higher than commanded at light loads. Although this is primarily an electrical diagnostic check, fuel supply issues and high pressure leaks can cause the PCM to force the Fuel Control Actuator into a region where this fault code becomes active. The PCM illuminates the MIL lamp and the ETC lamp immediately after the diagnostic runs and fails. During this time the customer may experience low power. The PCM turns off the MIL lamp after the diagnostic runs and passes in 4 consecutive drive cycles.

WHEN MONITORED:

Continuously with the engine running.

SET CONDITION:

The Powertrain Control Module (PCM) detects a discrepancy between the PWM signal supplied to the Fuel Control Actuator and the PWM returned from the Fuel Control Actuator.

POSSIBLE CAUSES

Possible Causes
HIGH RESISTANCE IN THE (K366) FUEL CONTROL ACTUATOR DRIVER CIRCUIT HIGH RESISTANCE IN THE (K365) FUEL CONTROL ACTUATOR RETURN CIRCUIT FUEL CONTROL ACTUATOR
POWERTRAIN CONTROL MODULE (PCM)

Always perform the Pre-Diagnostic Troubleshooting procedure before proceeding. Refer to PRE-DIAGNOSTIC TROUBLESHOOTING PROCEDURE - 6.7L .

DIAGNOSTIC TEST

1. **ACTIVE DTC**
    1. Ignition on, engine not running.
    2. Record freeze frame data and clear DTCs.
    3. Turn the ignition off for 75 seconds.
    4. Start the engine and let idle for up to two minutes.
    5. With the scan tool, read DTCs.

    Did the DTC reset?

    Yes

    - Go To 2.

No

- Perform the INTERMITTENT CONDITION - 6.7L diagnostic procedure. Refer to **INTERMITTENT CONDITION - 6.7L** .

2. **CHECK FOR HIGH RESISTANCE IN THE (K366) FUEL CONTROL ACTUATOR DRIVER CIRCUIT**

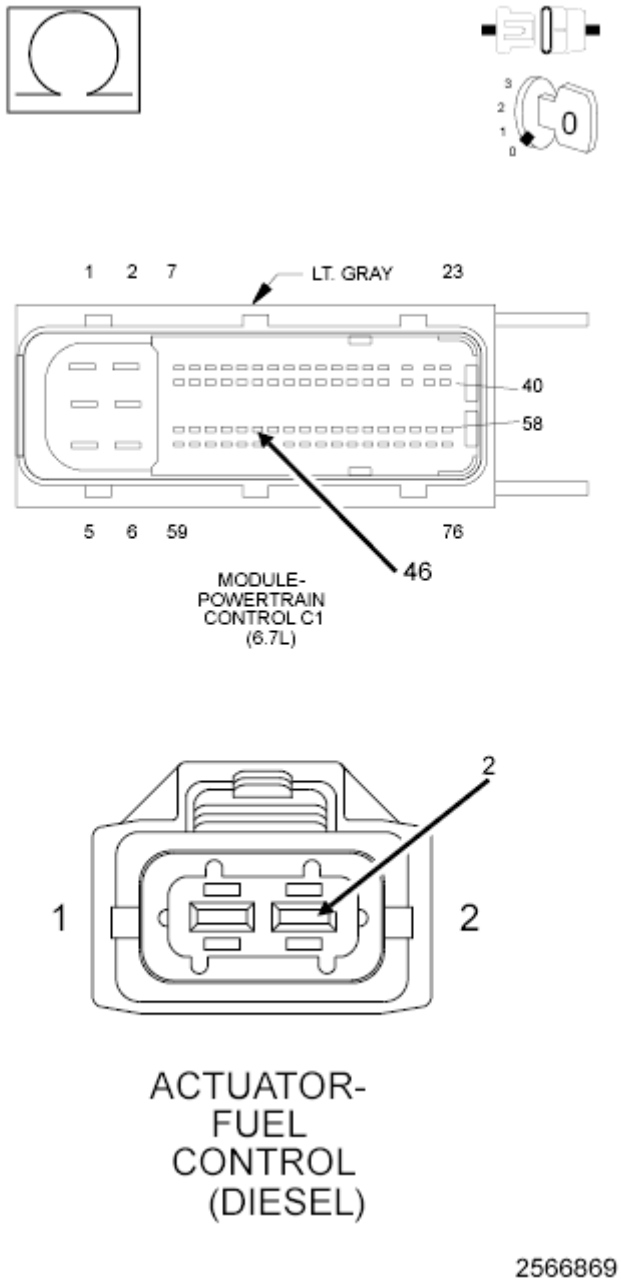

Fig. 95: Checking Fuel Control Actuator Driver Circuit For Open Or High Resistance
Courtesy of CHRYSLER GROUP, LLC

1. Turn the ignition off.

2. Disconnect the Fuel Control Actuator harness connector.
3. Disconnect the PCM C1 harness connector.

NOTE: Check connectors - Clean/repair as necessary.

4. Measure the resistance of the (K366) FCA Driver circuit between the Fuel Control Actuator harness connector and the PCM C1 harness connector.

   Is the resistance below 5.0 Ohms?

   Yes

   - Go To 3.

   No

   - Repair the (K366) Fuel Control Actuator Driver circuit for an open or high resistance.
   - Perform the POWERTRAIN VERIFICATION TEST - 6.7L. Refer to **POWERTRAIN VERIFICATION TEST - 6.7L** .

3. **CHECK FOR HIGH RESISTANCE IN THE (K365) FUEL CONTROL ACTUATOR RETURN CIRCUIT**

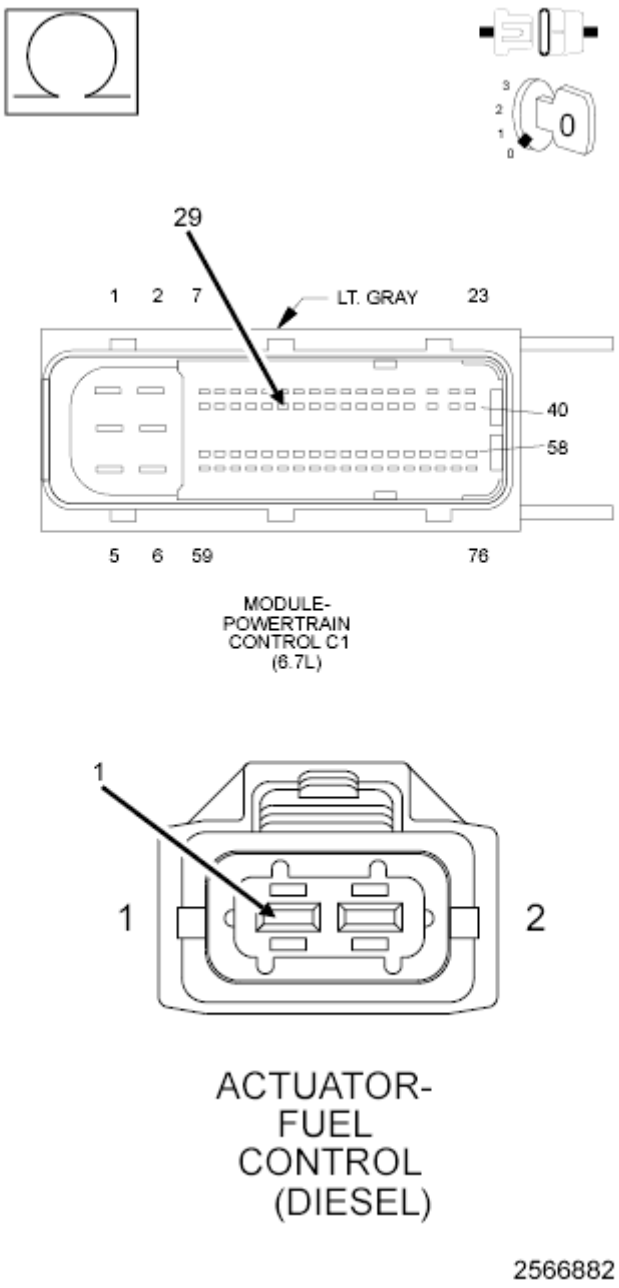

Fig. 96: Checking Fuel Control Actuator Return Circuit For Open Or High Resistance
Courtesy of CHRYSLER GROUP, LLC

1. Measure the resistance of the (K365) FCA Return circuit between the Fuel Control Actuator harness connector and the PCM C1 harness connector.

   Is the resistance below 5.0 Ohms?

   Yes

   - Go To 4.

No

- Repair the (K365) FCA Return circuit for an open or high resistance.
- Perform the POWERTRAIN VERIFICATION TEST - 6.7L. Refer to **POWERTRAIN VERIFICATION TEST - 6.7L** .

4. **FUEL CONTROL ACTUATOR**
   1. Reconnect the PCM C1 harness connector.
   2. Replace the Fuel Control Actuator in accordance with the service information.
   3. Turn the ignition on and clear any DTCs.
   4. Start the engine and let idle for at least two minutes.
   5. With the scan tool, read DTCs.

   Did the DTC reset?

   Yes

   - Replace and program the Powertrain Control Module in accordance with the service information.
   - Perform the POWERTRAIN VERIFICATION TEST - 6.7L. Refer to **POWERTRAIN VERIFICATION TEST - 6.7L** .

   No

   - Test complete.
   - Perform the POWERTRAIN VERIFICATION TEST - 6.7L. Refer to **POWERTRAIN VERIFICATION TEST - 6.7L** .

P026A-CHARGE AIR COOLER EFFICIENCY BELOW THRESHOLD

For a complete wiring diagram, **refer to appropriate SYSTEM WIRING DIAGRAMS article** .

WHEN MONITORED:

With the engine running, Charge Air Cooler (CAC) Temperature Sensor, Inlet Air Temperature, and Ambient Air Temperature Sensor status are valid.

SET CONDITION:

The Powertrain Control Module (PCM) compares the CAC Temperature Sensor reading to a calibrated threshold. The calibrated threshold varies, and is dependant on the reading from the Ambient Air Temperature Sensor. If the CAC Temperature Sensor reading is above the calibrated threshold for a cumulative total of 120 seconds, the PCM determines that the Charge Air Cooler is inefficient. Two trip fault.

POSSIBLE CAUSES

Possible Causes
CHARGE AIR COOLER TEMPERATURE SENSOR CHARGE AIR COOLER FINS BLOCKED FROM DEBRIS COOLING FAN FAULTY

Always perform the Pre-Diagnostic Troubleshooting procedure before proceeding. Refer to PRE-DIAGNOSTIC TROUBLESHOOTING PROCEDURE - 6.7L .

DIAGNOSTIC TEST

1. **OTHER DTCS**
    1. Turn the ignition on.
    2. With the scan tool, record all Freeze frame data.
    3. With the scan tool, read DTCs.

    Are there any CAC Temperature sensor or Cooling Fan DTCs present?

    Yes

    - Repair other DTCs before proceeding.

    No

    - Go To 2.
2. **CAC TEMPERATURE SENSOR**
    1. Turn the ignition off.
    2. Disconnect the CAC Temperature Sensor harness connector.
    3. Remove the CAC Temperature Sensor and reconnect the wiring to the sensor.
    4. Turn the ignition on.
    5. With the scan tool in, monitor the CAC Temperature Sensor while heating the sensor with an external heat source (DO NOT USE OPEN FLAME).

    Does the reading from the sensor increase at least 5°F on the scan tool?

    Yes

    - Go To 3.

    No

    - Replace the Charge Air Cooler Temperature Sensor in accordance with the service information.
    - Perform the POWERTRAIN VERIFICATION TEST - 6.7L. Refer to **POWERTRAIN VERIFICATION TEST - 6.7L** .

3. **VISUALLY INSPECT THE CHARGE AIR COOLER**
    1. Visually inspect the Charge Air Cooler and Radiator fins for excessive debris restricting air flow through the Charge Air Cooler.

       Are the Charge Air Cooler or Radiator restricted with debris?

       Yes

       - Clean the debris from the Charge Air Cooler or Radiator.
       - Perform the POWERTRAIN VERIFICATION TEST - 6.7L. Refer to **POWERTRAIN VERIFICATION TEST - 6.7L** .

       No

       - Go To 4.
4. **CHECK THE COOLING FAN OPERATION**
    1. Check the Viscous Cooling Fan operation. Refer to **FAN, COOLING, VISCOUS, DIAGNOSIS AND TESTING** .

       Was the Viscous Fan found to be operating normal?

       Yes

       - Check for a base engine condition, such as an engine overheat or intake air restriction that could cause the Charge Air Cooler to work inefficiently.
       - Perform the INTERMITTENT CONDITION - 6.7L diagnostic procedure. Refer to **INTERMITTENT CONDITION - 6.7L** .

       No

       - Clean the debris from the Charge Air Cooler or Radiator.
       - Perform the POWERTRAIN VERIFICATION TEST - 6.7L. Refer to **POWERTRAIN VERIFICATION TEST - 6.7L** .

P0299-MANIFOLD PRESSURE SENSOR OUT OF RANGE LOW

For a complete wiring diagram, **refer to appropriate SYSTEM WIRING DIAGRAMS article** .

WHEN MONITORED:

While the engine is running.

SET CONDITION:

The Powertrain Control Module (PCM) detects that the Inlet Air Pressure signal reading is below the expected level for the present engine operating conditions.

POSSIBLE CAUSES

Possible Causes
FAULTY INLET AIR PRESSURE/TEMPERATURE SENSOR
INTAKE SYSTEM LEAKS
RESTRICTION IN THE CHARGE AIR COOLER

Always perform the Pre-Diagnostic Troubleshooting procedure before proceeding. Refer to PRE-DIAGNOSTIC TROUBLESHOOTING PROCEDURE - 6.7L .

DIAGNOSTIC TEST

1. **OTHER DTCS**
    1. Turn the ignition on.
    2. With the scan tool, read and record the freeze frame data.
    3. With the scan tool, read the Engine DTCs.

    Are there any DTCs set for Turbocharger system, BARO Sensor, or Inlet Air Pressure Sensor?

    Yes

    - Repair other DTCs before proceeding.

    No

    - Go To 2.
2. **CHECK THE INLET AIR PRESSURE SENSOR**
    1. Turn the ignition off.
    2. Connect a mechanical intake manifold pressure gauge to the engine, as close to the Inlet Air Pressure Sensor as possible.
    3. Start the engine.
    4. With the scan tool, monitor the Inlet Air Pressure Sensor reading.

    Is the scan tool reading within 2.5 psi of the mechanical intake manifold pressure gauge?

    Yes

    - Go To 3.

    No

    - Replace the Inlet Air Pressure/Temperature Sensor in accordance with the service information.
    - Perform the POWERTRAIN VERIFICATION TEST - 6.7L. Refer to **POWERTRAIN**

VERIFICATION TEST - 6.7L .

3. **CHECK THE INTAKE SYSTEM FOR LEAKS**
   1. Perform the INTAKE AIR SYSTEM PRESSURE TEST diagnostic procedure. Refer to **DIAGNOSIS AND TESTING, 6.7L** .

      Were any Intake System leaks found?

      Yes

      - Perform the appropriate repair.
      - Perform the POWERTRAIN VERIFICATION TEST - 6.7L. Refer to **POWERTRAIN VERIFICATION TEST - 6.7L** .

      No

      - Go To 4.
4. **CHECK THE CHARGE AIR COOLER**
   1. Remove and clean the Charge Air Cooler with approved Mopar® EGR system cleaner.
   2. Reinstall the Charge Air Cooler.
   3. With the scan tool, erase DTCs.
   4. Turn the ignition off for 75 seconds.
   5. Start the engine.
   6. Test drive the vehicle. With the scan tool in Data Display, verify that the engine operating mode is normal.
   7. With the scan tool, read DTCs.

      Did the DTC return?

      Yes

      - Replace the Charge Air Cooler in accordance with the service information.
      - Perform the POWERTRAIN VERIFICATION TEST - 6.7L. Refer to **POWERTRAIN VERIFICATION TEST - 6.7L** .

      No

      - Repair complete.
      - Perform the POWERTRAIN VERIFICATION TEST - 6.7L. Refer to **POWERTRAIN VERIFICATION TEST - 6.7L** .

P02E1-DIESEL INTAKE AIR FLOW CONTROL PERFORMANCE

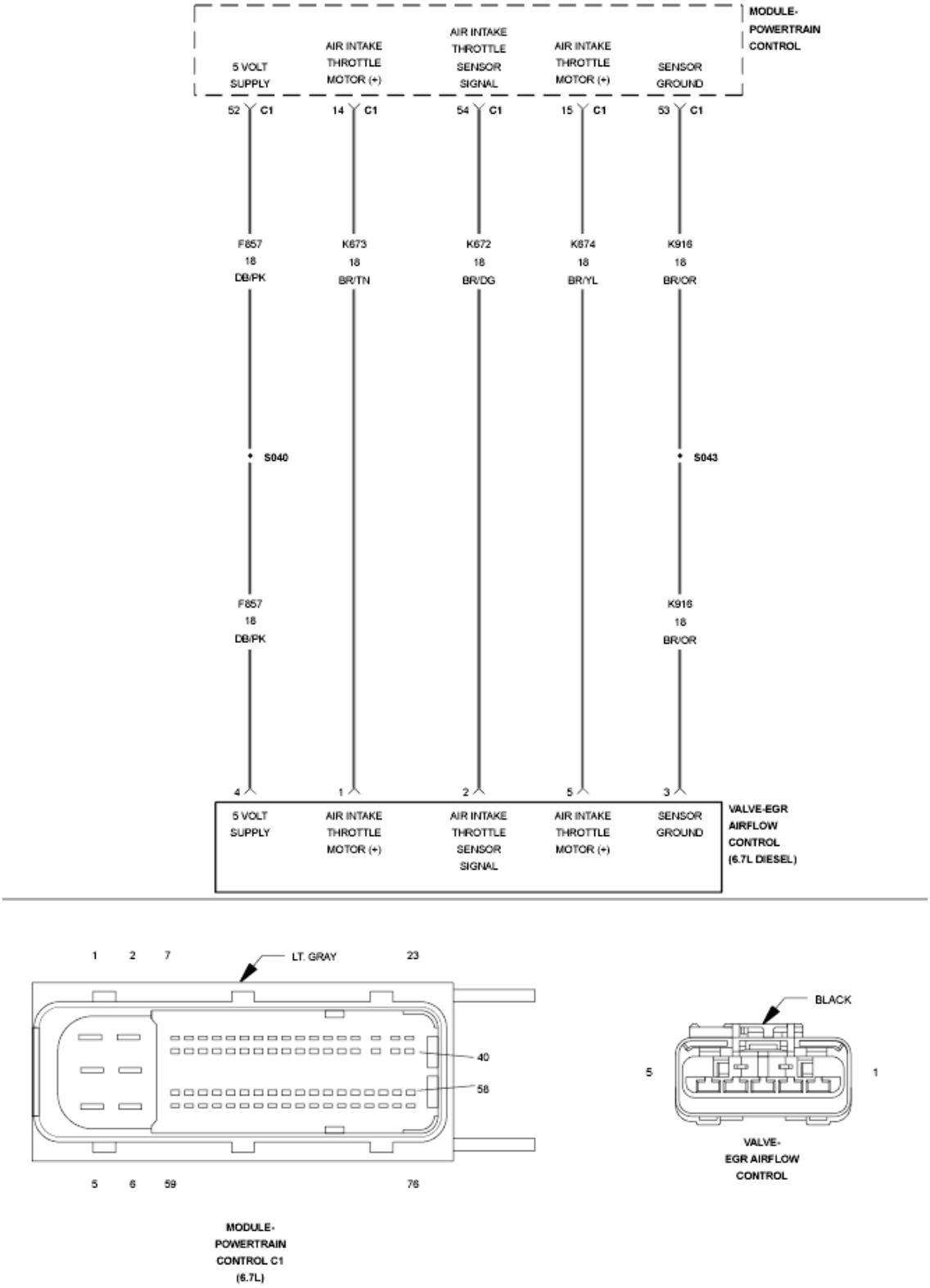

Fig. 97: EGR Airflow Control Valve Circuit Schematic
Courtesy of CHRYSLER GROUP, LLC

For a complete wiring diagram, **refer to appropriate SYSTEM WIRING DIAGRAMS article** .

THEORY OF OPERATION

The Powertrain Control Module (PCM) controls the operation of the Exhaust Gas Recirculation (EGR) Airflow Control Valve. The EGR Airflow Control Valve also has a built in position sensor. The PCM monitors the EGR Airflow Control Valve Signal circuit to determine if the EGR Airflow Control Valve is moving to the proper position commanded by the PCM. The PCM will illuminate the MIL lamp after the diagnostic runs and fails in two consecutive drive cycles. The PCM will turn off the MIL lamp after the diagnostic runs and passes in four consecutive drive cycles.

WHEN MONITORED:

With the ignition on.

SET CONDITION:

The Powertrain Control Module (PCM) detects that the EGR Airflow Control Valve sticking or out of calibration.

POSSIBLE CAUSES

Possible Causes
HIGH RESISTANCE IN THE (K674) EGR AIRFLOW CONTROL VALVE (-) CIRCUIT
HIGH RESISTANCE IN THE (K673) EGR AIRFLOW CONTROL VALVE (+) CIRCUIT
EGR AIRFLOW CONTROL VALVE
POWERTRAIN CONTROL MODULE (PCM)

Always perform the Pre-Diagnostic Troubleshooting procedure before proceeding. Refer to PRE-DIAGNOSTIC TROUBLESHOOTING PROCEDURE - 6.7L .

DIAGNOSTIC TEST

1. **DTC ACTIVE**
    1. Turn the ignition on.
    2. With the scan tool, record all Freeze frame data.
    3. With the scan tool, erase DTCs.
    4. Turn the ignition off for 75 seconds.
    5. Start the engine and let idle for one minute.
    6. With the scan tool, read DTCs.

    Is DTC P02E1 active?

    Yes

- Go To 2.

No

- Perform the INTERMITTENT CONDITION - 6.7L diagnostic procedure. Refer to **INTERMITTENT CONDITION - 6.7L** .

2. **CHECK THE (K674) EGR AIRFLOW CONTROL VALVE (-) CIRCUIT FOR HIGH RESISTANCE**

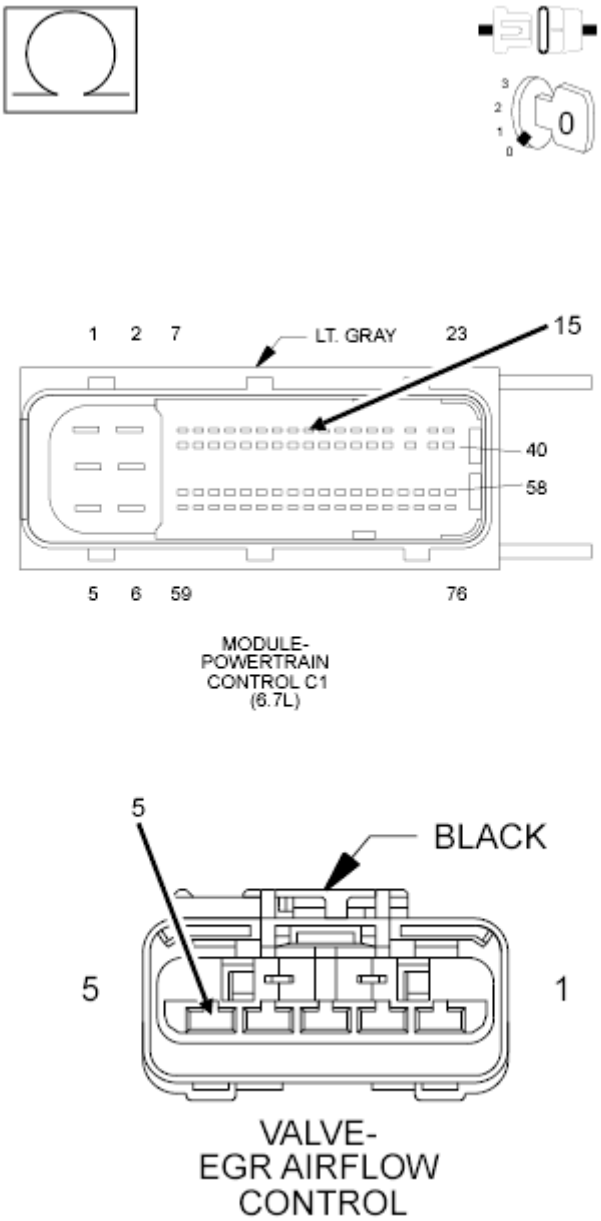

Fig. 98: Checking EGR Airflow Control Valve (-) Circuit For Open Or High Resistance
Courtesy of CHRYSLER GROUP, LLC

1. Turn the ignition off.
2. Disconnect the EGR Airflow Control Valve harness connector.
3. Disconnect the PCM C1 harness connector.

NOTE: Check connectors - Clean/repair as necessary.

4. Measure the resistance of the (K674) EGR Airflow Control Valve (-) circuit between the EGR Airflow Control Valve harness connector and the PCM C1 harness connector.

   Is the resistance below 5.0 Ohms?

   Yes

   - Go To 3.

   No

   - Repair the (K674) EGR Airflow Control Valve (-) circuit for an open or high resistance.
   - Perform the POWERTRAIN VERIFICATION TEST - 6.7L. Refer to **POWERTRAIN VERIFICATION TEST - 6.7L** .

3. **CHECK THE (K673) EGR AIRFLOW CONTROL VALVE (+) CIRCUIT FOR HIGH RESISTANCE**

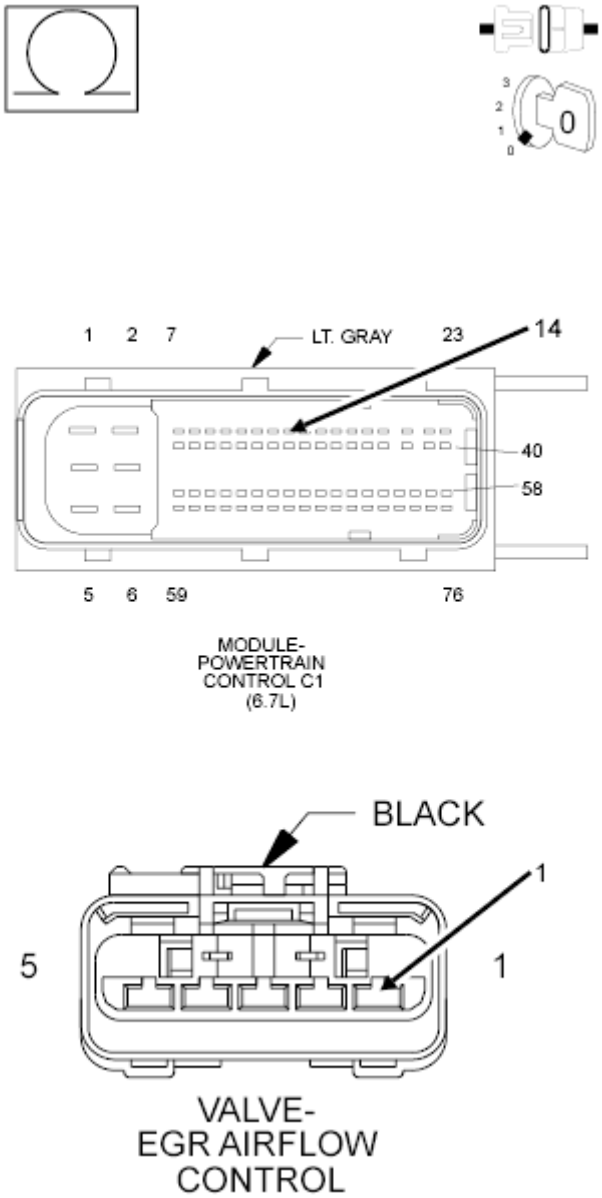

Fig. 99: Checking EGR Airflow Control Valve (+) Circuit For Open Or High Resistance
Courtesy of CHRYSLER GROUP, LLC

1. Measure the resistance of the (K673) EGR Airflow Control Valve (+) circuit between the EGR Airflow Control Valve harness connector and the PCM C1 harness connector.

   Is the resistance below 5.0 Ohms?

   Yes

   - Go To 4.

   No

- Repair the (K673) EGR Airflow Control Valve (+) circuit for an open or high resistance.
- Perform the POWERTRAIN VERIFICATION TEST - 6.7L. Refer to **POWERTRAIN VERIFICATION TEST - 6.7L** .

4. **EGR AIRFLOW CONTROL VALVE**
    1. Turn the ignition off.
    2. Reconnect the PCM C1 harness connector.
    3. Ignition on, engine not running.
    4. Using a voltmeter connected to ground, measure the voltage on the:
        - (K673) EGR Airflow Control Valve (+) circuit at the EGR Airflow Control Valve harness connector.
        - (K674) EGR Airflow Control Valve (-) circuit at the EGR Airflow Control Valve harness connector.

NOTE: **The voltage on the control circuits should read approximately battery voltage.**

Are both measurements equal to battery voltage?

Yes

- Replace the EGR Airflow Control Valve in accordance with the service information.
- Perform the POWERTRAIN VERIFICATION TEST - 6.7L. Refer to **POWERTRAIN VERIFICATION TEST - 6.7L** .

No

- Replace the Powertrain Control Module in accordance with the service information.
- Perform the POWERTRAIN VERIFICATION TEST - 6.7L. Refer to **POWERTRAIN VERIFICATION TEST - 6.7L** .

P02E2-DIESEL INTAKE AIR FLOW CONTROL CIRCUIT LOW

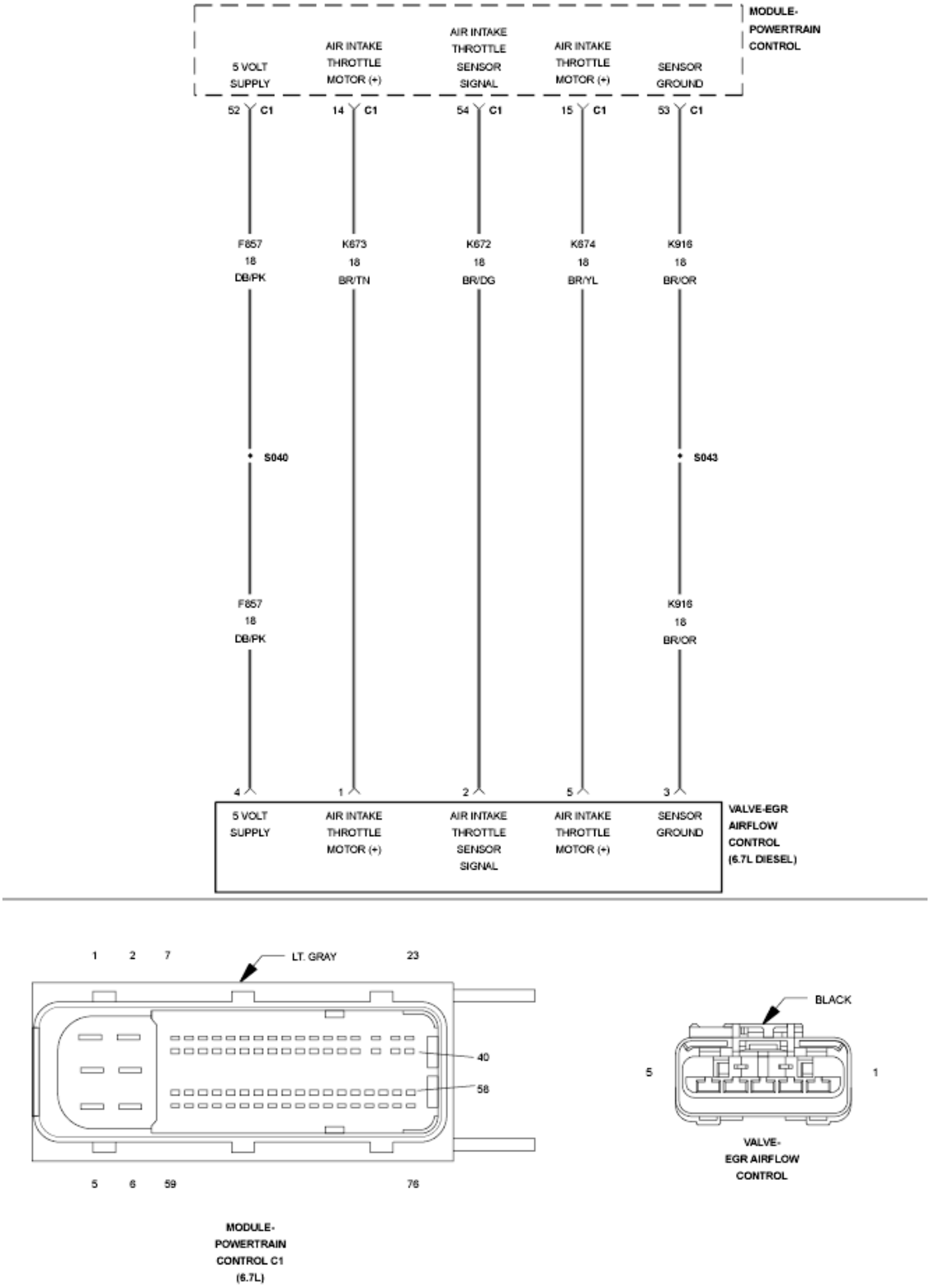

Fig. 100: EGR Airflow Control Valve Circuit Schematic
Courtesy of CHRYSLER GROUP, LLC

For a complete wiring diagram, **refer to appropriate SYSTEM WIRING DIAGRAMS article** .

THEORY OF OPERATION

The Powertrain Control Module (PCM) controls the operation of the Exhaust Gas Recirculation (EGR) Airflow Control Valve. The EGR Airflow Control Valve also has a built in position sensor. The PCM monitors the EGR Airflow Control Valve Signal circuit to determine if the EGR Airflow Control Valve is moving to the proper position commanded by the PCM. The PCM will illuminate the MIL lamp after the diagnostic runs and fails in two consecutive drive cycles. The PCM will turn off the MIL lamp after the diagnostic runs and passes in 4 consecutive drive cycles.

WHEN MONITORED:

With the ignition on.

SET CONDITION:

The Powertrain Control Module detects that the control circuit voltage for the EGR Airflow Control Valve is below the calibrated limit.

POSSIBLE CAUSES

Possible Causes
(K674) EGR AIRFLOW CONTROL VALVE (-) CIRCUIT SHORTED TO GROUND
(K673) EGR AIRFLOW CONTROL VALVE (+) CIRCUIT SHORTED TO GROUND
EGR AIRFLOW CONTROL VALVE
POWERTRAIN CONTROL MODULE (PCM)

Always perform the Pre-Diagnostic Troubleshooting procedure before proceeding. Refer to PRE-DIAGNOSTIC TROUBLESHOOTING PROCEDURE - 6.7L .

DIAGNOSTIC TEST

1. **DTC ACTIVE**
    1. Turn the ignition on.
    2. With the scan tool, record all Freeze frame data.
    3. With the scan tool, erase DTCs.
    4. Turn the ignition off for 75 seconds.
    5. Start the engine and let idle for one minute.
    6. With the scan tool, read DTCs.

    Did the DTC return?

    Yes

- Go To 2.

No

- Perform the INTERMITTENT CONDITION - 6.7L diagnostic procedure. Refer to **INTERMITTENT CONDITION - 6.7L** .

2. **CHECK THE (K674) EGR AIRFLOW CONTROL VALVE (-) CIRCUIT FOR A SHORT TO GROUND**

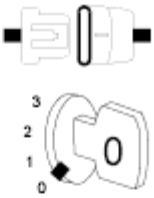

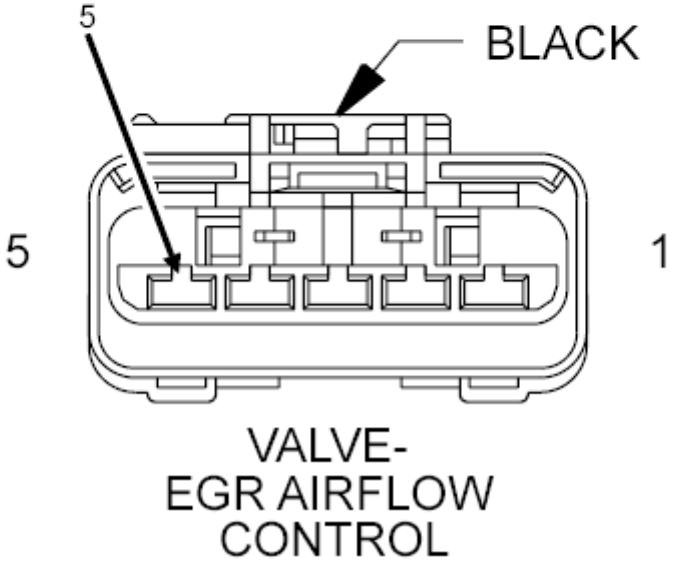

Fig. 101: Checking EGR Airflow Control Valve (-) Circuit For A Short To Ground
Courtesy of CHRYSLER GROUP, LLC

1. Turn the ignition off.
2. Disconnect the EGR Airflow Control Valve harness connector.

3. Disconnect the PCM C1 harness connector.
4. Measure the resistance between ground and the (K674) EGR Airflow Control Valve (-) circuit at the EGR Airflow Control Valve harness connector.

   Is the resistance below 10k Ohms?

   Yes

   - Repair the (K674) EGR Airflow Control Valve (-) circuit for an open or high resistance.
   - Perform the POWERTRAIN VERIFICATION TEST - 6.7L. Refer to **POWERTRAIN VERIFICATION TEST - 6.7L** .

   No

   - Go To 3.

3. **CHECK THE (K673) EGR AIRFLOW CONTROL VALVE (+) CIRCUIT FOR A SHORT TO GROUND**

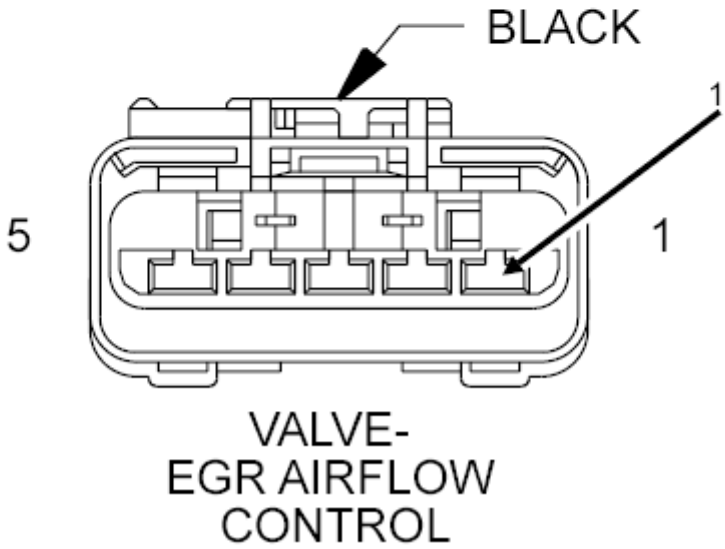

Fig. 102: Checking EGR Airflow Control Valve (+) Circuit For A Short To Ground
Courtesy of CHRYSLER GROUP, LLC

1. Measure the resistance between ground and the (K673) EGR Airflow Control Valve (+) circuit at the EGR Airflow Control Valve harness connector.

   Is the resistance below 10k Ohms?

   Yes

   - Repair the (K673) EGR Airflow Control Valve (+) circuit for a short to ground.
   - Perform the POWERTRAIN VERIFICATION TEST - 6.7L. Refer to **POWERTRAIN VERIFICATION TEST - 6.7L** .

No

- Go To 4.

4. **EGR AIRFLOW CONTROL VALVE**
    1. **Replace the EGR Airflow Control Valve in accordance with the Service Information.**
    2. Reconnect the EGR Airflow Control Valve harness connector.
    3. Reconnect the PCM C1 harness connector.
    4. Turn the ignition on.
    5. With the scan tool, erase DTCs.
    6. Start the engine and allow it to idle for one minute.
    7. With the scan tool, read DTCs.

    Did the DTC return?

    Yes

    - Replace Powertrain Control Module in accordance with the Service Information.
    - Perform the POWERTRAIN VERIFICATION TEST - 6.7L. Refer to **POWERTRAIN VERIFICATION TEST - 6.7L** .

    No

    - Repair complete.
    - Perform the POWERTRAIN VERIFICATION TEST - 6.7L. Refer to **POWERTRAIN VERIFICATION TEST - 6.7L** .

P02E3-DIESEL INTAKE AIR FLOW CONTROL CIRCUIT HIGH

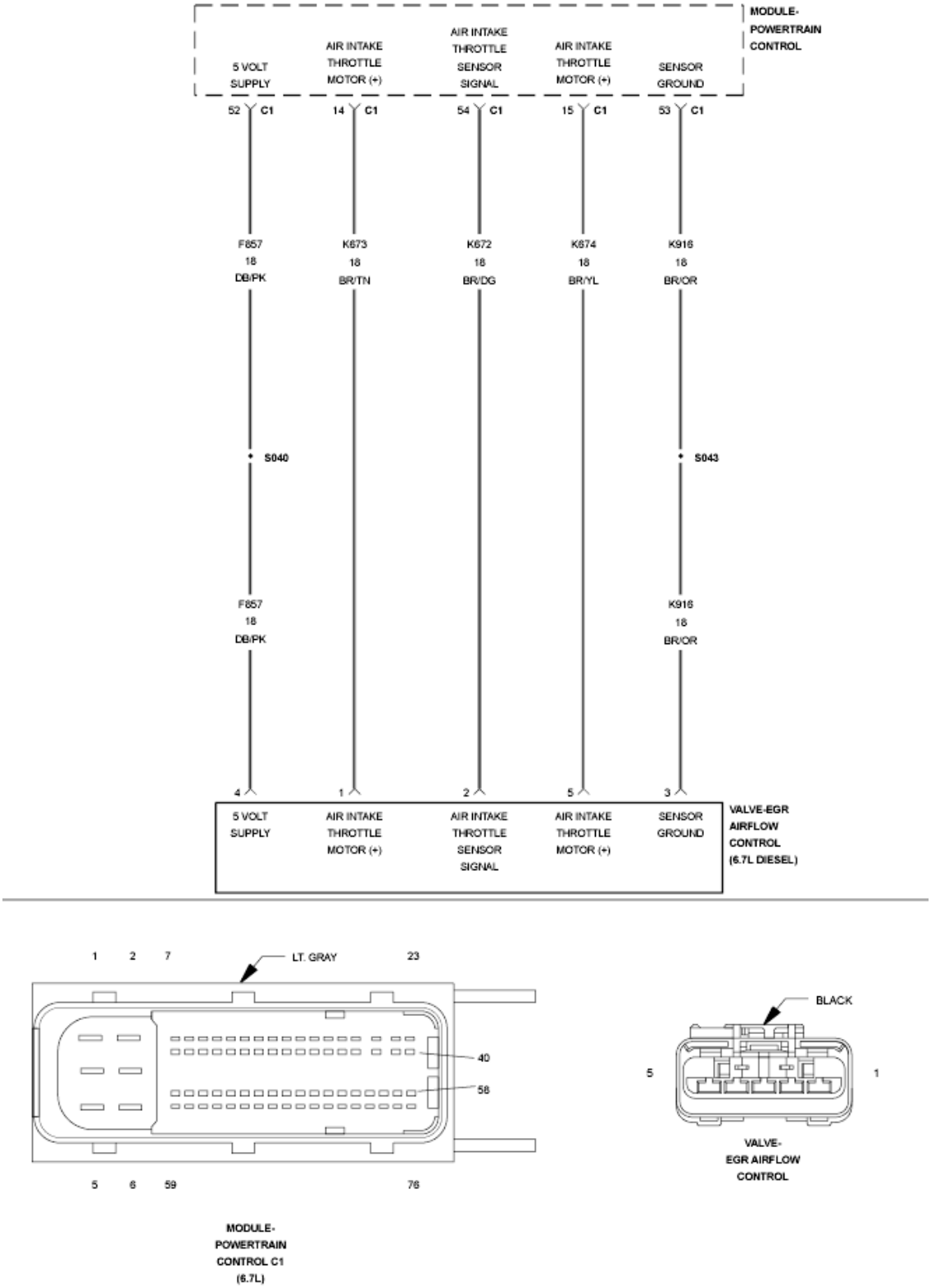

Fig. 103: EGR Airflow Control Valve Circuit Schematic
Courtesy of CHRYSLER GROUP, LLC

For a complete wiring diagram, **refer to appropriate SYSTEM WIRING DIAGRAMS article** .

THEORY OF OPERATION

The Powertrain Control Module (PCM) controls the operation of the Exhaust Gas Recirculation (EGR) Airflow Control Valve. The EGR Airflow Control Valve also has a built in position sensor. The PCM monitors the EGR Airflow Control Valve Signal circuit to determine if the EGR Airflow Control Valve is moving to the proper position commanded by the PCM. The PCM will illuminate the MIL lamp after the diagnostic runs and fails in two consecutive drive cycles. The PCM will turn off the MIL lamp after the diagnostic runs and passes in 4 consecutive drive cycles.

WHEN MONITORED:

With the ignition on.

SET CONDITION:

The Powertrain Control Module detects that the control circuit voltage for the EGR Airflow Control Valve is above the calibrated limit.

POSSIBLE CAUSES

Possible Causes
(K674) EGR AIRFLOW CONTROL VALVE (-) CIRCUIT OPEN/HIGH RESISTANCE
(K673) EGR AIRFLOW CONTROL VALVE (+) CIRCUIT OPEN/HIGH RESISTANCE
EGR AIRFLOW CONTROL VALVE
POWERTRAIN CONTROL MODULE (PCM)

Always perform the Pre-Diagnostic Troubleshooting procedure before proceeding. Refer to PRE-DIAGNOSTIC TROUBLESHOOTING PROCEDURE - 6.7L .

DIAGNOSTIC TEST

1. **ACTIVE DTC**
    1. Turn the ignition on.
    2. With the scan tool, record all Freeze frame data.
    3. With the scan tool, erase DTCs.
    4. Turn the ignition off for 75 seconds.
    5. Start the engine and let idle for one minute.
    6. With the scan tool, read DTCs.

    Did the DTC return?

    Yes

- Go To 2.

No

- Perform the INTERMITTENT CONDITION - 6.7L diagnostic procedure. Refer to **INTERMITTENT CONDITION - 6.7L** .

2. **CHECK THE (K674) EGR AIRFLOW CONTROL VALVE (-) CIRCUIT FOR AN OPEN/HIGH RESISTANCE**

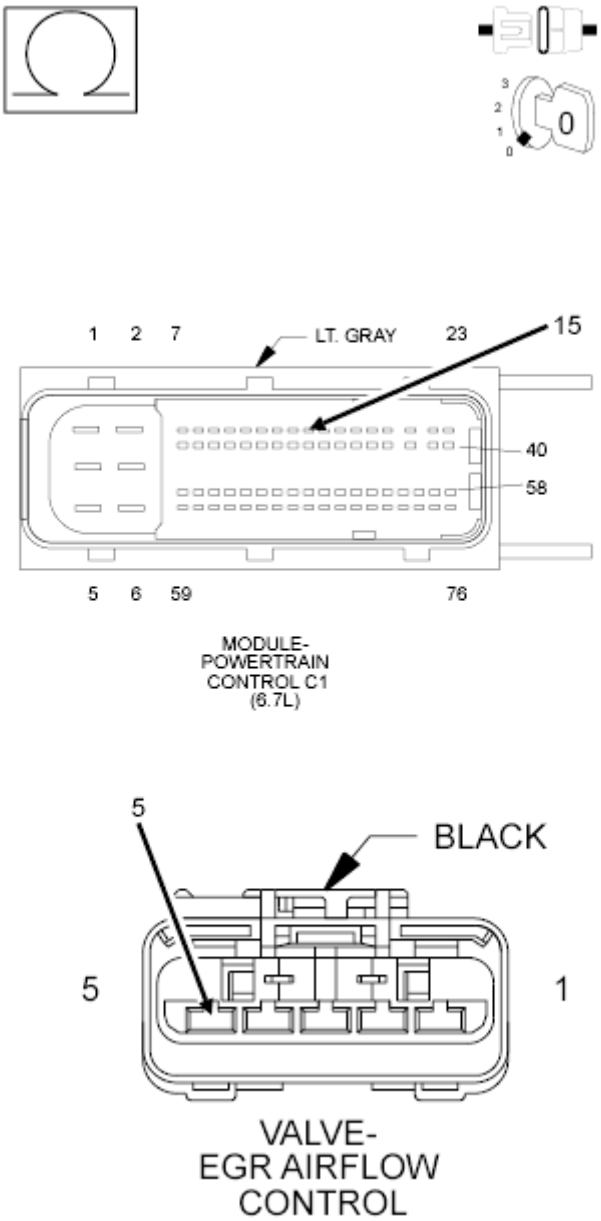

Fig. 104: Checking EGR Airflow Control Valve (-) Circuit For Open Or High Resistance
Courtesy of CHRYSLER GROUP, LLC

1. Turn the ignition off.
2. Disconnect the PCM C1 harness connector.
3. Disconnect the EGR Airflow Control Valve harness connector.
4. Measure the resistance of the (K674) EGR Airflow Control Valve (-) circuit between the EGR Airflow Control Valve harness connector and the PCM C1 harness connector.

   Is the resistance below 5.0 Ohms?

   Yes

   - Go To 3.

   No

   - Repair the (K674) EGR Airflow Control Valve (-) circuit for an open or high resistance.
   - Perform the POWERTRAIN VERIFICATION TEST - 6.7L. Refer to **POWERTRAIN VERIFICATION TEST - 6.7L** .

3. **CHECK THE (K673) EGR AIRFLOW CONTROL VALVE (+) CIRCUIT FOR AN OPEN/HIGH RESISTANCE**

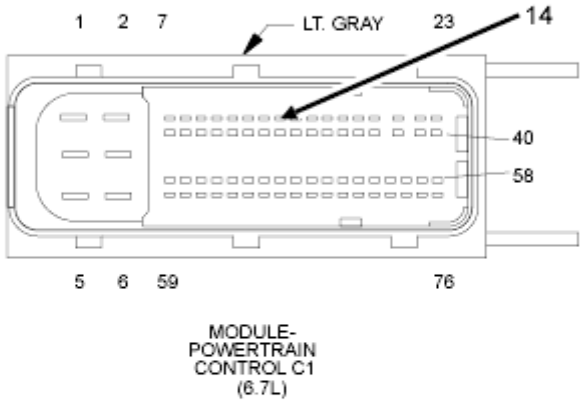

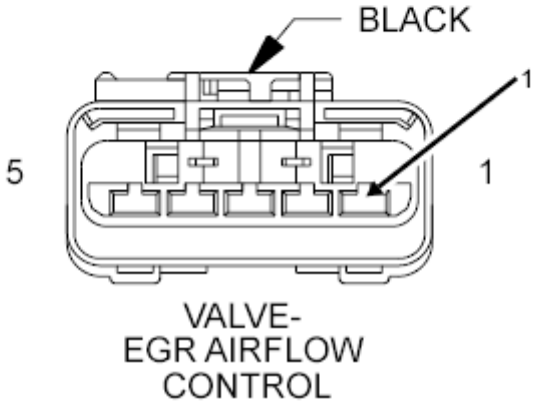

Fig. 105: Checking EGR Airflow Control Valve (+) Circuit For Open Or High Resistance
Courtesy of CHRYSLER GROUP, LLC

1. Measure the resistance of the (K673) EGR Airflow Control Valve Actuator (+) circuit between the EGR Airflow Control Valve harness connector and the PCM C1 harness connector.

   Is the resistance below 5.0 Ohms?

   Yes

   - Go To 4.

   No

- Repair the (K673) EGR Airflow Control Valve Actuator (+) circuit for an open or high resistance.
- Perform the POWERTRAIN VERIFICATION TEST - 6.7L. Refer to **POWERTRAIN VERIFICATION TEST - 6.7L** .

4. **EGR AIRFLOW CONTROL VALVE**
    1. **Replace the EGR Airflow Control Valve in accordance with the Service Information.**
    2. Reconnect the EGR Airflow Control Valve harness connector.
    3. Reconnect the PCM C1 harness connector.
    4. Turn the ignition on.
    5. With the scan tool, erase DTCs.
    6. With the scan tool, read DTCs.

    Did the DTC return?

    Yes

    - Replace Powertrain Control Module in accordance with the Service Information.
    - Perform the POWERTRAIN VERIFICATION TEST - 6.7L. Refer to **POWERTRAIN VERIFICATION TEST - 6.7L** .

    No

    - Repair complete.
    - Perform the POWERTRAIN VERIFICATION TEST - 6.7L. Refer to **POWERTRAIN VERIFICATION TEST - 6.7L** .

P02E7-DIESEL INTAKE AIR FLOW POSITION SENSOR PERFORMANCE

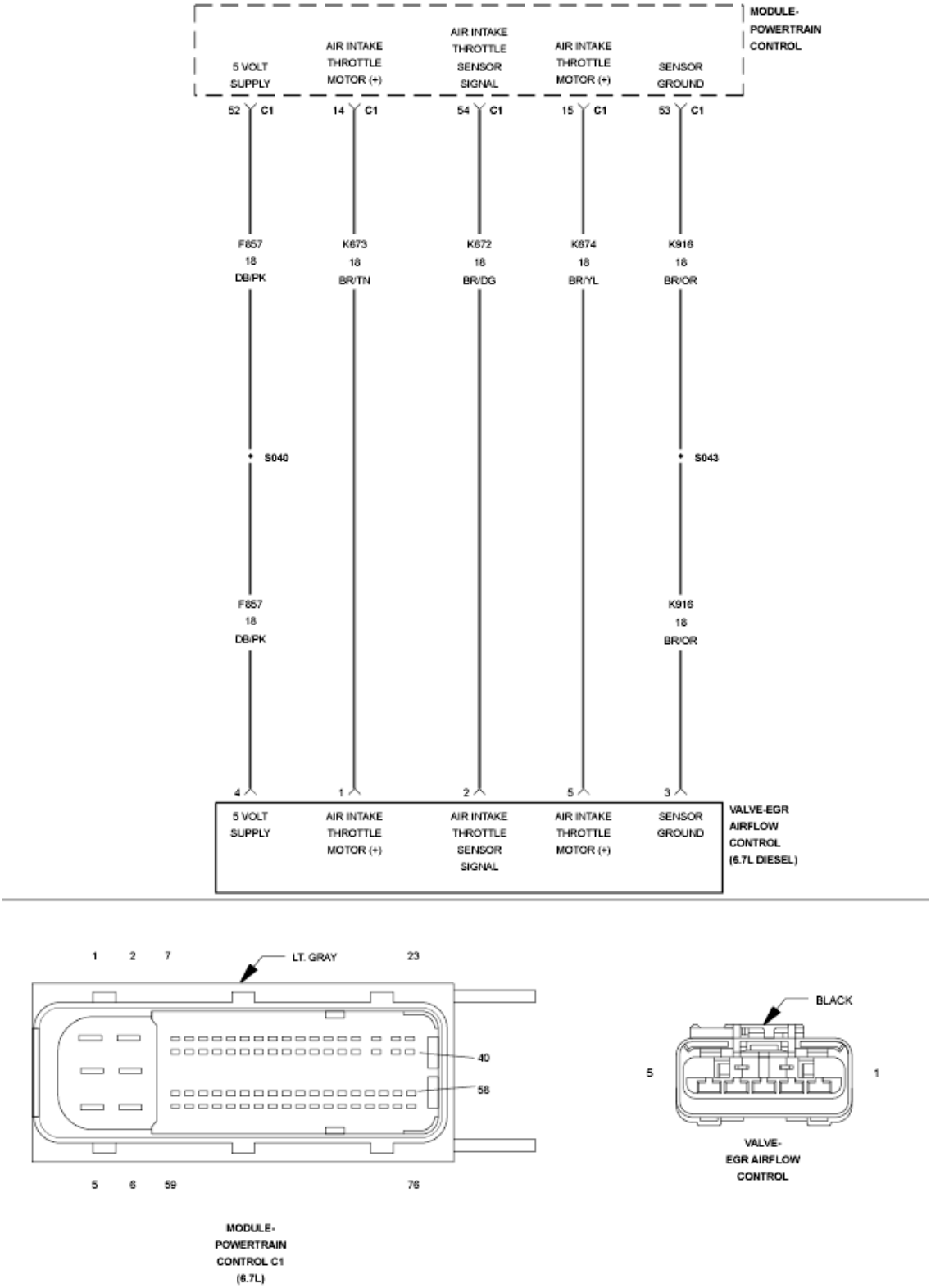

Fig. 106: EGR Airflow Control Valve Circuit Schematic
Courtesy of CHRYSLER GROUP, LLC

For a complete wiring diagram, **refer to appropriate SYSTEM WIRING DIAGRAMS article** .

THEORY OF OPERATION

The EGR Airflow Control Valve controlled by the Powertrain Control Module (PCM) and is actuated by an electric motor. A spring internal to the actuator assembly attempts to drive the valve to the fully-open position. The electric motor works to overcome the spring force when the engine control module commands the valve to close. Position feedback from the valve is sent to the PCM to allow for closed-loop control. Discrepancy in position feedback sent to the PCM, and commanded position sent to the EGR Airflow Control Valve by more than a prescribed amount will result in failure of device rationality diagnostics. Failure to properly actuate the EGR Airflow Control Valve can result in poor engine performance. The PCM will illuminate the MIL lamp after the diagnostic runs and fails in two consecutive drive cycles. This may cause active Exhaust Aftertreatment regenerations to last longer. The PCM will turn off the MIL lamp after the diagnostic runs and passes in 4 consecutive drive cycles.

WHEN MONITORED:

With the engine running.

SET CONDITION:

Actual EGR Airflow Control Valve position differs from Commanded EGR Airflow Control Valve position by more than 8% on average, over a 15 second diagnostic window.

POSSIBLE CAUSES

Possible Causes
HIGH RESISTANCE IN THE (K672) AIR INTAKE THROTTLE SENSOR SIGNAL CIRCUIT
EGR AIRFLOW CONTROL VALVE OBSTRUCTED/STICKING
EGR AIRFLOW CONTROL VALVE
POWERTRAIN CONTROL MODULE (PCM)

Always perform the Pre-Diagnostic Troubleshooting procedure before proceeding. Refer to PRE-DIAGNOSTIC TROUBLESHOOTING PROCEDURE - 6.7L .

DIAGNOSTIC TEST

1. **ACTIVE DTC**
    1. Start the engine and allow it to idle.
    2. With the scan tool, read DTCs.

       Is the DTC active?

       Yes

       - Go To 2.

No

- Perform the INTERMITTENT CONDITION - 6.7L diagnostic procedure. Refer to **INTERMITTENT CONDITION - 6.7L** .

2. **CHECK THE EGR AIRFLOW THROTTLE CONTROL VALVE**
   1. Remove the boot from the EGR Throttle Control Valve. Using a mirror, look at the butterfly valve on the inside of the EGR Throttle Control Valve.
   2. Start the vehicle, let idle for 10 seconds.
   3. Turn ignition off.

   NOTE: If functioning properly the EGR Throttle Control Valve will close immediately after the engine is shut down.

   Did the EGR Throttle Control Valve close immediately after the engine was shut down?

   Yes

   - Go To 4.

   No

   - Go To 3.

3. **CHECK THE EGR AIRFLOW CONTROL VALVE FOR BINDING OR STICKING**
   1. Turn the ignition off.
   2. Check the butterfly valve for signs of a physical obstruction.

   Was there an obstruction found?

   Yes

   - Repair as necessary.
   - Perform the POWERTRAIN VERIFICATION TEST - 6.7L. Refer to **POWERTRAIN VERIFICATION TEST - 6.7L** .

   No

   - Replace the EGR Airflow Control Valve in accordance with the service information.
   - Perform the POWERTRAIN VERIFICATION TEST - 6.7L. Refer to **POWERTRAIN VERIFICATION TEST - 6.7L** .

4. **CHECK FOR HIGH RESISTANCE IN THE (K672) AIR INTAKE THROTTLE SENSOR SIGNAL CIRCUIT**

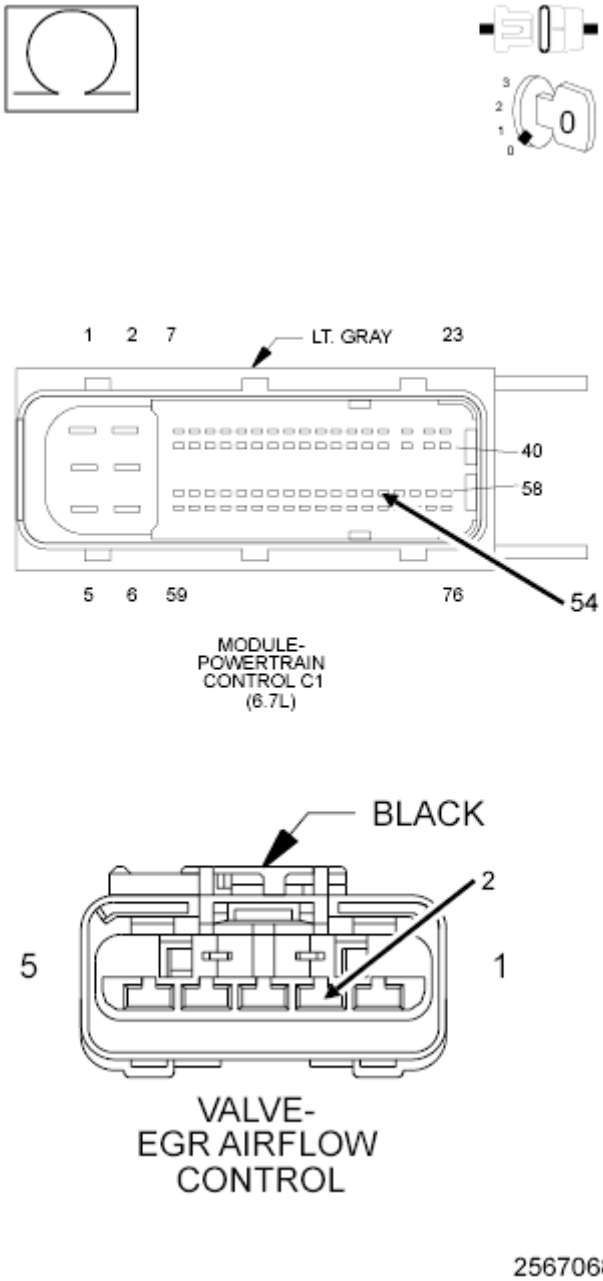

Fig. 107: Checking For Open Or High Resistance In Air Intake Throttle Sensor Signal Circuit
Courtesy of CHRYSLER GROUP, LLC

1. Disconnect the EGR Airflow Control Valve harness connector.
2. Disconnect the PCM C1 harness connector.
3. Measure the resistance between ground and the (K672) Air Intake Throttle Sensor Signal circuit at the EGR Airflow Control Valve harness connector.

   Is the resistance below 10k Ohms?

   Yes

- Go To 5.

No

- Repair the (K672) Air Intake Throttle Sensor Signal circuit for an open or high resistance.
- Perform the POWERTRAIN VERIFICATION TEST - 6.7L. Refer to **POWERTRAIN VERIFICATION TEST - 6.7L** .

5. **CHECK THE EGR AIRFLOW CONTROL VALVE**
    1. Turn the ignition off.
    2. Reconnect the PCM harness connector.
    3. Reconnect the EGR Airflow Control Valve harness connector.
    4. Ignition on, engine not running.
    5. With the scan tool, erase DTCs.
    6. While monitoring the scan tool, disconnect the EGR Airflow Control Valve harness connector.
    7. With the scan tool, read DTCs.

    Is DTC P02E9 active?

    Yes

    - Replace the EGR Airflow Control Valve in accordance with the service information.
    - Perform the POWERTRAIN VERIFICATION TEST - 6.7L. Refer to **POWERTRAIN VERIFICATION TEST - 6.7L** .

    No

    - Replace the Powertrain Control Module in accordance with the service information.
    - Perform the POWERTRAIN VERIFICATION TEST - 6.7L. Refer to **POWERTRAIN VERIFICATION TEST - 6.7L** .

P02E8-DIESEL INTAKE AIR FLOW POSITION SENSOR CIRCUIT LOW

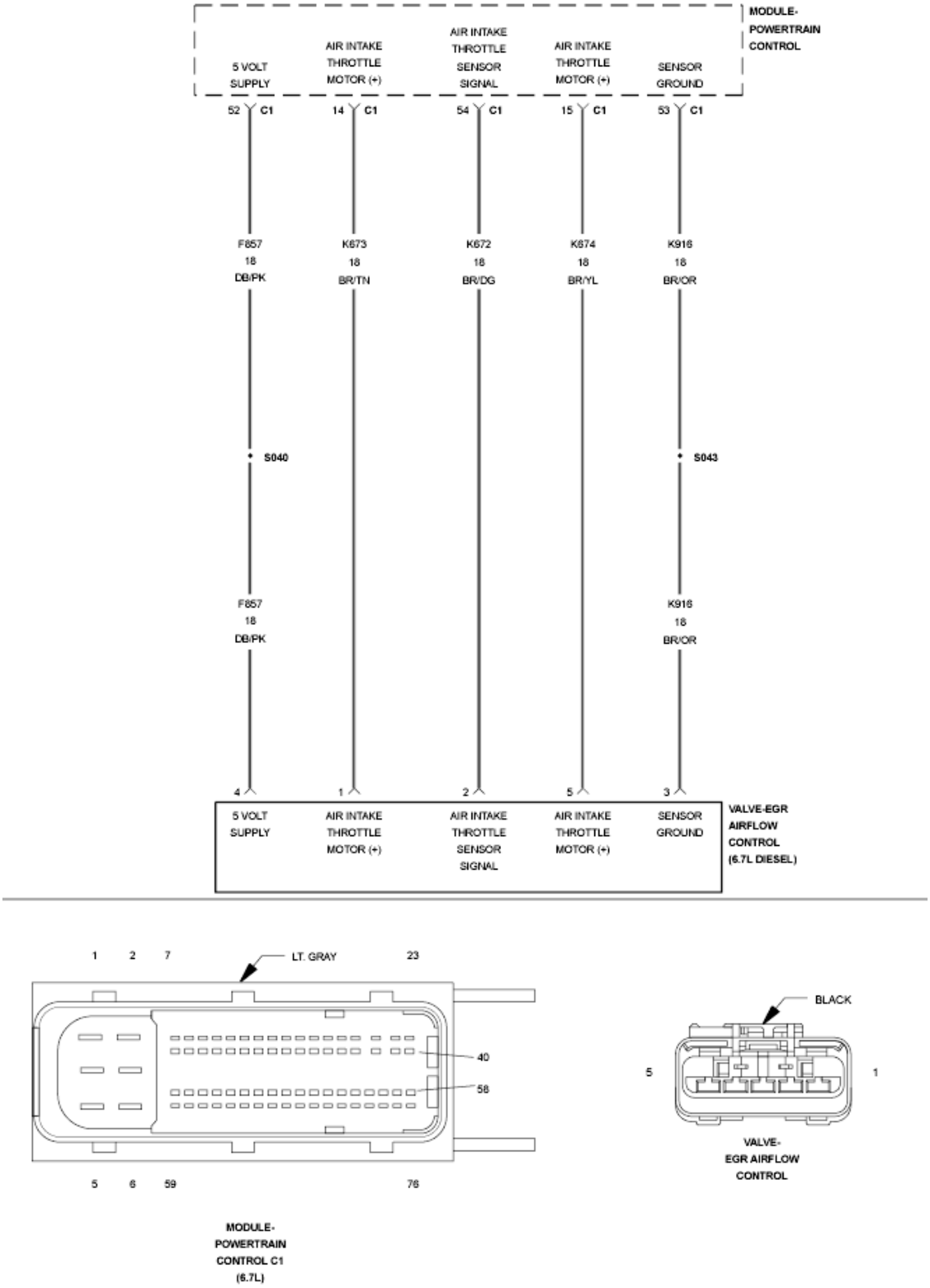

Fig. 108: EGR Airflow Control Valve Circuit Schematic
Courtesy of CHRYSLER GROUP, LLC

For a complete wiring diagram, **refer to appropriate SYSTEM WIRING DIAGRAMS article** .

THEORY OF OPERATION

The EGR Airflow Control Valve controlled by the Powertrain Control Module (PCM) and is actuated by an electric motor. A spring internal to the actuator assembly attempts to drive the valve to the fully-open position. The electric motor works to overcome the spring force when the engine control module commands the valve to close. Position feedback from the valve is sent to the PCM to allow for closed-loop control. Discrepancy in position feedback sent to the PCM, and commanded position sent to the EGR Airflow Control Valve by more than a prescribed amount will result in failure of device rationality diagnostics. Failure to properly actuate the EGR Airflow Control Valve can result in poor engine performance. The PCM will illuminate the MIL lamp after the diagnostic runs and fails in two consecutive drive cycles. This may cause active Exhaust Aftertreatment regenerations to last longer. The PCM will turn off the MIL lamp after the diagnostic runs and passes in 4 consecutive drive cycles.

WHEN MONITORED:

Ignition on.

SET CONDITION:

The PCM detects that the (K672) Air Intake Throttle Sensor Signal circuit is below a calibrated voltage for a calibrated amount of time.

POSSIBLE CAUSES

Possible Causes
(K672) AIR INTAKE THROTTLE SENSOR SIGNAL CIRCUIT SHORTED TO GROUND
EGR AIRFLOW CONTROL VALVE
POWERTRAIN CONTROL MODULE (PCM)

Always perform the Pre-Diagnostic Troubleshooting procedure before proceeding. Refer to PRE-DIAGNOSTIC TROUBLESHOOTING PROCEDURE - 6.7L .

DIAGNOSTIC TEST

1. **ACTIVE DTC**

NOTE: **If there are Mass Airflow Sensor and Turbocharger DTCs present with this DTC, repair the (F348) 12-volt Supply circuit for an open or short to ground condition.**

1. Turn the ignition on.
2. With the scan tool, record all Freeze frame data.
3. With the scan tool, erase DTCs.
4. Turn the ignition off for 75 seconds.

5. Start the engine and let idle.
6. With the scan tool, read DTCs.

   Did the DTC reset?

   Yes

   - Go To 2.

   No

   - Perform the INTERMITTENT CONDITION - 6.7L diagnostic procedure. Refer to **INTERMITTENT CONDITION - 6.7L** .

2. **CHECK THE (K672) AIR INTAKE THROTTLE SENSOR SIGNAL CIRCUIT FOR A SHORT TO GROUND**

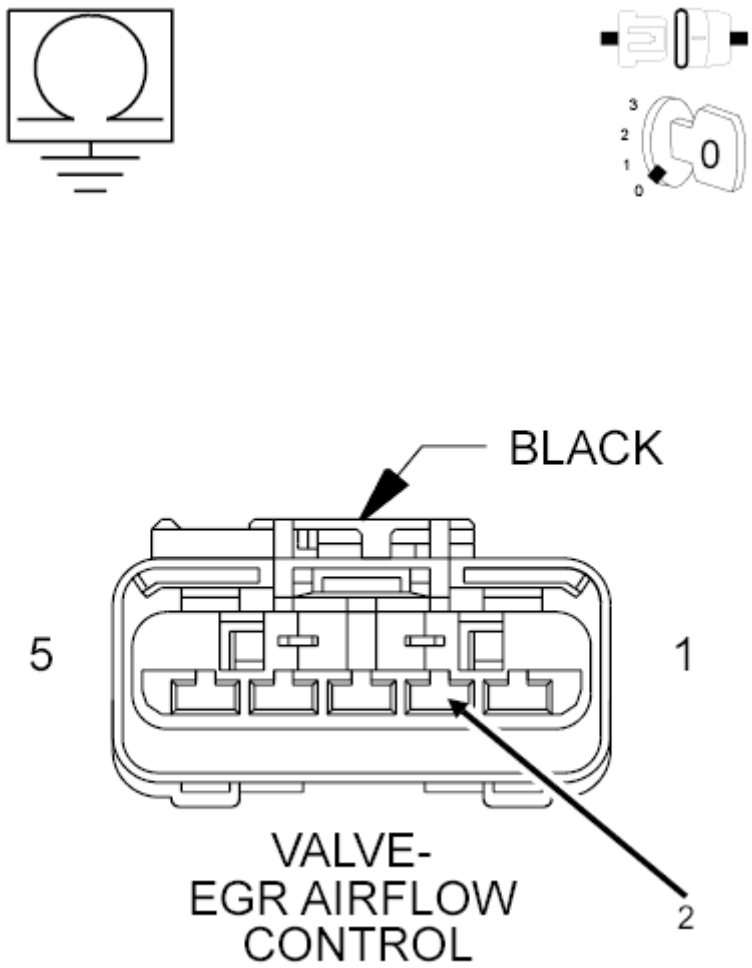

Fig. 109: Checking Air Intake Throttle Sensor Signal Circuit For Short To Ground
Courtesy of CHRYSLER GROUP, LLC

1. Ignition on.
2. Disconnect the EGR Airflow Control Valve harness connector.
3. Disconnect the PCM C1 harness connector.
4. Measure the resistance of the (K672) Air Intake Throttle Sensor Signal circuit at the EGR Airflow Control Valve harness connector.

   Is the resistance below 10k Ohms?

   Yes

   - Repair the (K672) Air Intake Throttle Sensor Signal circuit for a short to ground.
   - Perform the POWERTRAIN VERIFICATION TEST - 6.7L. Refer to **POWERTRAIN VERIFICATION TEST - 6.7L** .

   No

   - Go To 3.

3. **EGR AIRFLOW CONTROL VALVE**
   1. **Replace the EGR Airflow Control Valve.**
   2. Reconnect the EGR Airflow Control Valve harness connector.
   3. Reconnect the PCM C1 harness connector.
   4. Turn the ignition on.
   5. With the scan tool, erase DTCs.
   6. Turn the ignition off for 75 seconds.
   7. Start the engine and let idle.
   8. With the scan tool, read DTCs.

   Did the DTC reset?

   Yes

   - Replace Powertrain Control Module in accordance with the service information.
   - Perform the POWERTRAIN VERIFICATION TEST - 6.7L. Refer to **POWERTRAIN VERIFICATION TEST - 6.7L** .

   No

   - Repair complete.
   - Perform the POWERTRAIN VERIFICATION TEST - 6.7L. Refer to **POWERTRAIN VERIFICATION TEST - 6.7L** .

P02E9-DIESEL INTAKE AIR FLOW POSITION SENSOR CIRCUIT HIGH

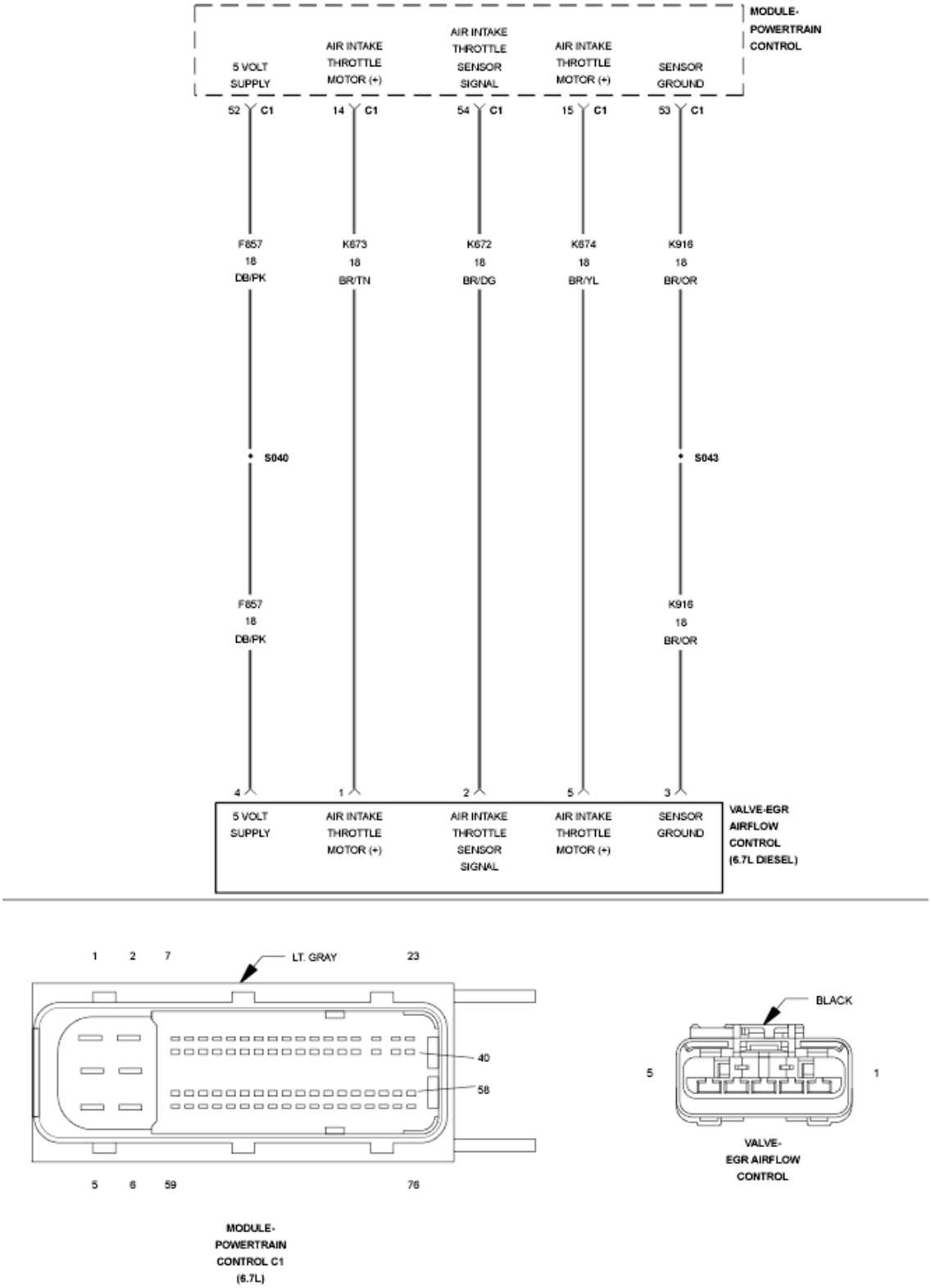

Fig. 110: EGR Airflow Control Valve Circuit Schematic
Courtesy of CHRYSLER GROUP, LLC

For a complete wiring diagram, **refer to appropriate SYSTEM WIRING DIAGRAMS article** .

THEORY OF OPERATION

The EGR Airflow Control Valve controlled by the Powertrain Control Module (PCM) and is actuated by an electric motor. A spring internal to the actuator assembly attempts to drive the valve to the fully-open position. The electric motor works to overcome the spring force when the engine control module commands the valve to close. Position feedback from the valve is sent to the PCM to allow for closed-loop control. Discrepancy in position feedback sent to the PCM, and commanded position sent to the EGR Airflow Control Valve by more than a prescribed amount will result in failure of device rationality diagnostics. Failure to properly actuate the EGR Airflow Control Valve can result in poor engine performance. The PCM will illuminate the MIL lamp after the diagnostic runs and fails in two consecutive drive cycles. This may cause active Exhaust Aftertreatment regenerations to last longer. The PCM will turn off the MIL lamp after the diagnostic runs and passes in 4 consecutive drive cycles.

WHEN MONITORED:

Ignition on.

SET CONDITION:

The PCM detects that the (K672) Air Intake Throttle Sensor Signal circuit is above a calibrated voltage for a calibrated amount of time.

POSSIBLE CAUSES

Possible Causes
(K672) AIR INTAKE THROTTLE SENSOR SIGNAL CIRCUIT SHORTED TO VOLTAGE
(K672) AIR INTAKE THROTTLE SENSOR SIGNAL CIRCUIT SHORTED TO THE (F857) 5-VOLT SUPPLY CIRCUIT
(K672) AIR INTAKE THROTTLE SENSOR SIGNAL CIRCUIT OPEN/HIGH RESISTANCE
EGR AIRFLOW CONTROL VALVE
POWERTRAIN CONTROL MODULE (PCM)

Always perform the Pre-Diagnostic Troubleshooting procedure before proceeding. Refer to PRE-DIAGNOSTIC TROUBLESHOOTING PROCEDURE - 6.7L .

DIAGNOSTIC TEST

1. **ACTIVE DTC**

NOTE: **If there are Mass Airflow Sensor and Turbocharger DTCs present with this DTC, repair the (F348) 12-volt Supply circuit for an open or short to ground condition.**

1. Turn the ignition on.

2. With the scan tool, record all Freeze frame data.
3. With the scan tool, erase DTCs.
4. Turn the ignition off for 75 seconds.
5. Start the engine and let idle.
6. With the scan tool, read DTCs.

Did the DTC reset?

Yes

- Go To 2.

No

- Perform the INTERMITTENT CONDITION - 6.7L diagnostic procedure. Refer to **INTERMITTENT CONDITION - 6.7L** .

2. **CHECK THE (K672) AIR INTAKE THROTTLE SENSOR SIGNAL CIRCUIT FOR A SHORT TO VOLTAGE**

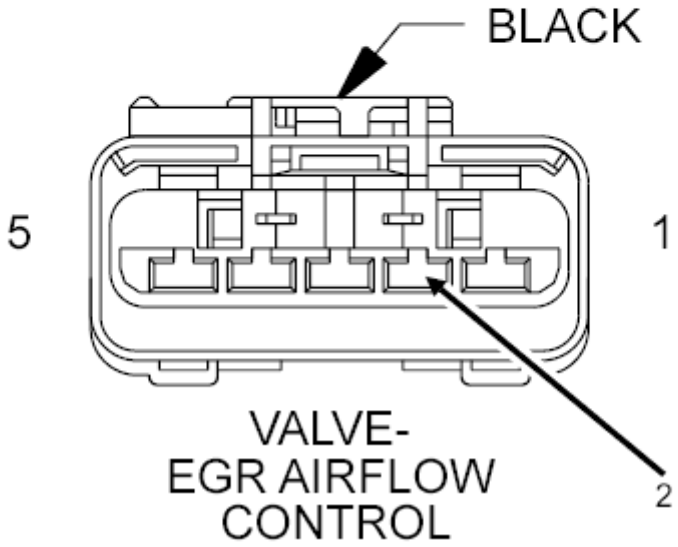

Fig. 111: Checking Air Intake Throttle Sensor Signal Circuit For Short To Voltage
Courtesy of CHRYSLER GROUP, LLC

1. Turn the ignition off.
2. Disconnect the EGR Airflow Control Valve harness connector.
3. Measure the voltage on the (K672) Air Intake Throttle Sensor Signal circuit at the EGR Airflow Control Valve harness connector.

   Is the voltage reading above 5.1 Volts?

   Yes

   - Repair the (K672) Air Intake Throttle Sensor Signal circuit for a short to voltage.
   - Perform the POWERTRAIN VERIFICATION TEST - 6.7L. Refer to **POWERTRAIN VERIFICATION TEST - 6.7L** .

   No

- Go To 3.

3. **CHECK FOR THE (K672) AIR INTAKE THROTTLE SENSOR SIGNAL CIRCUIT SHORTED TO THE (F857) 5-VOLT SUPPLY CIRCUIT**

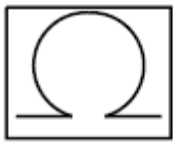

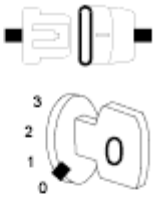

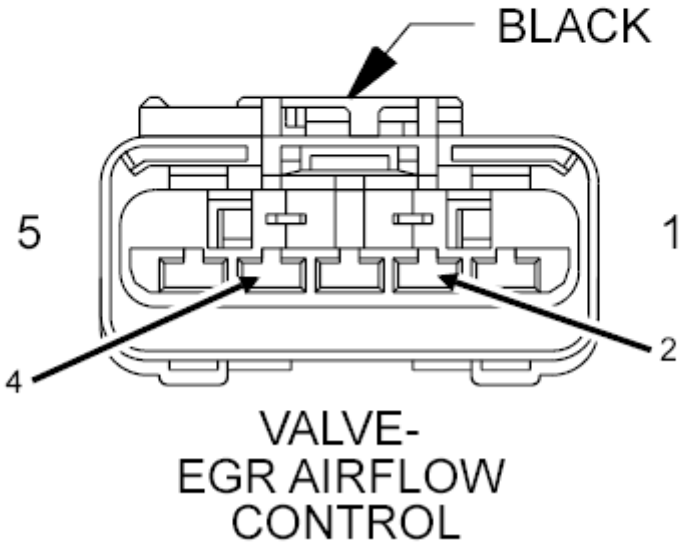

Fig. 112: Checking For Air Intake Throttle Sensor Signal Circuit Shorted To 5-Volt Supply Circuit
Courtesy of CHRYSLER GROUP, LLC

1. Disconnect the PCM C1 harness connector.
2. Measure the resistance between the (K672) Air Intake Throttle Sensor Signal circuit and the (F857) 5-Volt Sensor Supply Circuit at the EGR Airflow Control Valve harness connector.

   Is the resistance below 10k Ohms?

   Yes

   - Go To 5.

No

- Repair the short between the (K672) Air Intake Throttle Sensor Signal circuit and the (F857) 5-Volt Sensor Supply Circuit.
- Perform the POWERTRAIN VERIFICATION TEST - 6.7L. Refer to **POWERTRAIN VERIFICATION TEST - 6.7L** .

4. **CHECK THE (K672) AIR INTAKE THROTTLE SENSOR SIGNAL CIRCUIT FOR AN OPEN/HIGH RESISTANCE**

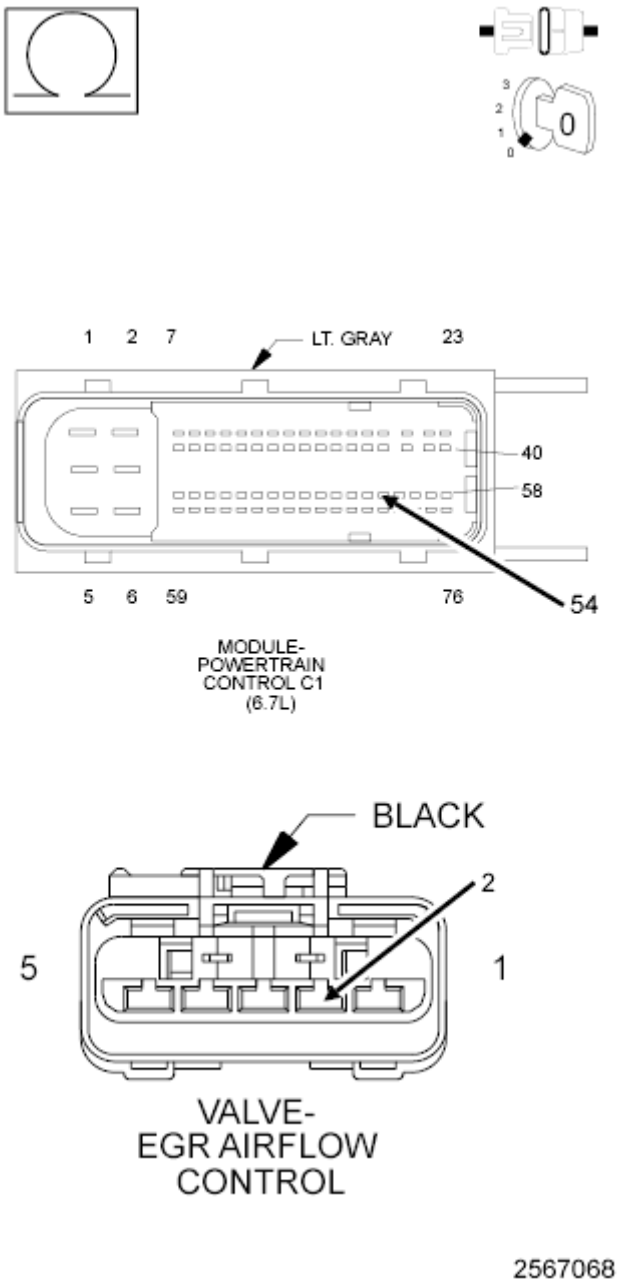

Fig. 113: Checking For Open Or High Resistance In Air Intake Throttle Sensor Signal Circuit
Courtesy of CHRYSLER GROUP, LLC

1. Measure the resistance between ground and the (K672) Air Intake Throttle Sensor Signal circuit at the EGR Airflow Control Valve harness connector.

   Is the resistance below 10k Ohms?

   Yes

   - Go To 5.

   No

   - Repair the (K672) Air Intake Throttle Sensor Signal circuit for a short to ground.
   - Perform the POWERTRAIN VERIFICATION TEST - 6.7L. Refer to **POWERTRAIN VERIFICATION TEST - 6.7L** .

5. **EGR AIRFLOW CONTROL VALVE**
   1. **Replace the EGR Airflow Control Valve.**
   2. Reconnect the EGR Airflow Control Valve harness connector.
   3. Reconnect the PCM C1 harness connector.
   4. Turn the ignition on.
   5. With the scan tool, erase DTCs.
   6. Turn the ignition off for 75 seconds.
   7. Start the engine and let idle.
   8. With the scan tool, read DTCs.

      Did the DTC reset?

      Yes

      - Replace Powertrain Control Module in accordance with the service information.
      - Perform the POWERTRAIN VERIFICATION TEST - 6.7L. Refer to **POWERTRAIN VERIFICATION TEST - 6.7L** .

      No

      - Repair complete.
      - Perform the POWERTRAIN VERIFICATION TEST - 6.7L. Refer to **POWERTRAIN VERIFICATION TEST - 6.7L** .

P0300-MULTIPLE CYLINDER MISFIRE

For a complete wiring diagram, **refer to appropriate SYSTEM WIRING DIAGRAMS article** .

THEORY OF OPERATION

The Misfire Monitor gathers and filters engine crank speed data for 10.0 seconds once the monitor conditions are met. If the crank speed deviation for a cylinder is less than a calibrated value, a misfire fault is set for that cylinder. If more than one cylinder is failed, a multiple cylinder misfire fault is set in addition to the individual faults of the failed cylinders. The engine must be at operating temperature and must not be in active aftertreatment regeneration mode in order to run this monitor. The PCM illuminates the MIL lamp after the diagnostic runs and fails twice in a row. During this time the customer may experience a cylinder miss or engine stumble. The PCM will turn off the MIL lamp once the monitor runs and passes in three consecutive diagnostic runs or drive cycles (which ever comes later).

WHEN MONITORED:

While the engine is idling.

SET CONDITION:

Misfire detected on multiple cylinders.

POSSIBLE CAUSES

Possible Causes
LOW FUEL
DAMAGED FUEL LINES
VALVE TRAIN
OBSTRUCTED FUEL INJECTOR SUPPLY LINES
DAMAGED OR OBSTRUCTED HIGH PRESSURE CONNECTORS
EXTERNAL DAMAGED FUEL INJECTOR
INTERNAL DAMAGED FUEL INJECTOR
LOW COMPRESSION
EXCESSIVE ENGINE LEAK DOWN

Always perform the Pre-Diagnostic Troubleshooting procedure before proceeding. Refer to PRE-DIAGNOSTIC TROUBLESHOOTING PROCEDURE - 6.7L .

DIAGNOSTIC TEST

1. **LOW FUEL**
    1. Using the scan tool, verify that the fuel level is above 15%.

       Is the fuel level above 15%?

       Yes

       - Go To 2.

       No

- Add fuel, Go To 2.
- Perform the POWERTRAIN VERIFICATION TEST - 6.7L. Refer to **POWERTRAIN VERIFICATION TEST - 6.7L** .

2. **OTHER DTCS**
   1. Read the Freeze frame data.

      Is the DTC equal to the freeze frame DTC?

      Yes

      - Go To 3.

      No

      - Repair any other DTCs first.
      - Perform the POWERTRAIN VERIFICATION TEST - 6.7L. Refer to **POWERTRAIN VERIFICATION TEST - 6.7L** .
3. **CHECK FOR DAMAGED FUEL LINES**
   1. Visually inspect the injector supply lines for damage.

      Do you have any kinked or bent fuel lines?

      Yes

      - Repair or replace damaged fuel lines.
      - Perform the POWERTRAIN VERIFICATION TEST - 6.7L. Refer to **POWERTRAIN VERIFICATION TEST - 6.7L** .

      No

      - Go To 4.
4. **CHECK THE VALVE TRAIN**
   1. Visually inspect the valve train and check the valve lash on the suspect cylinders.

      Is the valve train functional and the lash within the specifications listed in the service information?

      Yes

      - Go To 5.

      No

      - Adjust the lash or fix or repair any damaged components.
      - Perform the POWERTRAIN VERIFICATION TEST - 6.7L. Refer to **POWERTRAIN**

VERIFICATION TEST - 6.7L .

5. **CHECK FOR OBSTRUCTED FUEL INJECTOR SUPPLY**
    1. Remove the fuel injector supply lines for the suspect cylinders.
    2. Inspect both ends of the fuel injector supply lines for damage.
    3. Using shop air pressure, blow out the fuel injector supply lines to verify that they are not obstructed.

    Are the fuel lines free of debris or damage?

    Yes

    - Go To 6.

    No

    - Replace the damaged or obstructed fuel injector supply lines.
    - Perform the POWERTRAIN VERIFICATION TEST - 6.7L. Refer to **POWERTRAIN VERIFICATION TEST - 6.7L** .
6. **CHECK FOR DAMAGED OR OBSTRUCTED HIGH PRESSURE CONNECTORS**
    1. Remove the high pressure connectors for the suspect cylinders.
    2. Inspect both ends of the high pressure connectors for signs of damage.
    3. Using shop air pressure, blow out the high pressure connectors to verify that they are not obstructed.

    Are the high pressure connectors free of debris or damage?

    Yes

    - Go To 7.

    No

    - Replace the damaged or obstructed high pressure connectors.
    - Perform the POWERTRAIN VERIFICATION TEST - 6.7L. Refer to **POWERTRAIN VERIFICATION TEST - 6.7L** .
7. **CHECK THE FUEL INJECTORS**
    1. Remove the suspect fuel injectors.

    Are the fuel injectors damaged?

    Yes

    - Replace the external damaged fuel injectors and high pressure connectors.
    - Perform the POWERTRAIN VERIFICATION TEST - 6.7L. Refer to **POWERTRAIN**

VERIFICATION TEST - 6.7L .

No

- Go To 8.

8. **INTERNAL DAMAGED FUEL INJECTOR**
   1. With the scan tool, erase DTCs.
   2. Switch the misfiring injectors and high pressure connectors with injectors and high pressure connectors from cylinders that are firing properly.
   3. Operate the vehicle.

   Did the misfire DTC follow the suspect injectors and high pressure connectors?

   Yes

   - Replace the internal damaged fuel injector and high pressure connector.
   - Perform the POWERTRAIN VERIFICATION TEST - 6.7L. Refer to **POWERTRAIN VERIFICATION TEST - 6.7L** .

   No

   - Go To 9.

9. **CHECK FOR INTERNAL ENGINE DAMAGE**
   1. Perform engine compression test. Refer to **CYLINDER COMPRESSION/LEAKAGE TESTS** .

   Did the suspect cylinders pass the compression test?

   Yes

   - Go To 10.

   No

   - Repair the internal damage to the engine.
   - Perform the POWERTRAIN VERIFICATION TEST - 6.7L. Refer to **POWERTRAIN VERIFICATION TEST - 6.7L** .

10. **CHECK FOR INTERNAL ENGINE DAMAGE**
    1. Perform engine leak down test. Refer to **CYLINDER COMPRESSION/LEAKAGE TESTS** .

    Did the suspect cylinders pass the leak down test?

    Yes

    - Test Complete.

No

- Repair the internal damage to the engine.
- Perform the POWERTRAIN VERIFICATION TEST - 6.7L. Refer to **POWERTRAIN VERIFICATION TEST - 6.7L** .

P0301-CYLINDER 1 MISFIRE

For a complete wiring diagram, **refer to appropriate SYSTEM WIRING DIAGRAMS article** .

THEORY OF OPERATION

The Crankshaft Position (CKP) and Camshaft Position (CMP) Sensors are hall effect type sensors. The Powertrain Control Module (PCM) provides a 5-Volt supply to the position sensor and return circuit. A notch on the crankshaft gear is used to determine the position of the engine by the PCM. As the notch on the crankshaft speed ring or the windows in the back of the camshaft gear move past the position sensor, a signal is generated on the position sensor circuit. The change in engine speed when different calibrated fuel quantities are added by the injector to this cylinder is a measure of how well the cylinder is firing. This DTC is a two trip fault. Active regeneration will be disabled when the mill lamp is on. The PCM will turn off the MIL lamp after the monitor runs and passes three consecutive times.

WHEN MONITORED:

While the engine is idling at operating temperature.

SET CONDITION:

Misfire detected on this cylinder.

POSSIBLE CAUSES

Possible Causes
LOW FUEL
DAMAGED FUEL LINE
VALVE TRAIN
OBSTRUCTED FUEL INJECTOR SUPPLY LINE
DAMAGED OR OBSTRUCTED HIGH PRESSURE CONNECTOR
EXTERNAL DAMAGED FUEL INJECTOR
INTERNAL DAMAGED FUEL INJECTOR
LOW COMPRESSION
EXCESSIVE ENGINE LEAK DOWN

Always perform the Pre-Diagnostic Troubleshooting procedure before proceeding. Refer to PRE-DIAGNOSTIC TROUBLESHOOTING PROCEDURE - 6.7L .

DIAGNOSTIC TEST

1. **LOW FUEL**
    1. Using the scan tool, verify that the fuel level is above 15%.

       Is the fuel level above 15%?

       Yes

       - Go To 2.

       No

       - Add fuel.
       - Go To 2.
2. **OTHER DTCS**
    1. Read the Freeze frame data.

       Is the DTC equal to the freeze frame DTC?

       Yes

       - Go To 3.

       No

       - Repair any other DTCs first.
       - Perform the POWERTRAIN VERIFICATION TEST - 6.7L. Refer to **POWERTRAIN VERIFICATION TEST - 6.7L** .
3. **CHECK FOR DAMAGED FUEL LINES**
    1. Visually inspect the injector supply line for damage.

       Do you have any kinked or bent fuel lines?

       Yes

       - Repair or replace the damaged fuel line.
       - Perform the POWERTRAIN VERIFICATION TEST - 6.7L. Refer to **POWERTRAIN VERIFICATION TEST - 6.7L** .

       No

       - Go To 4.
4. **CHECK THE VALVE TRAIN**
    1. Visually inspect the valve train and check the valve lash on the suspect cylinder.

Is the valve train functional and the lash within the specifications listed in the service information?

Yes

- Go To 5.

No

- Adjust the lash or fix or repair any damaged components.
- Perform the POWERTRAIN VERIFICATION TEST - 6.7L. Refer to **POWERTRAIN VERIFICATION TEST - 6.7L** .

5. **CHECK FOR OBSTRUCTED FUEL INJECTOR SUPPLY**
   1. Remove the fuel injector supply line for the suspect cylinder.
   2. Inspect both ends of the fuel injector supply line for damage.
   3. Using shop air pressure, blow out the fuel injector supply line to verify that they are not obstructed.

   Are the fuel lines free of debris or damage?

   Yes

   - Go To 6.

   No

   - Replace the damaged or obstructed fuel injector supply line.
   - Perform the POWERTRAIN VERIFICATION TEST - 6.7L. Refer to **POWERTRAIN VERIFICATION TEST - 6.7L** .
6. **CHECK FOR DAMAGED OR OBSTRUCTED HIGH PRESSURE CONNECTOR**
   1. Remove the high pressure connector for the suspect cylinder.
   2. Inspect both ends of the high pressure connector for signs of damage.
   3. Using shop air pressure, blow out the high pressure connector to verify that it is not obstructed.

   Are the high pressure connectors free of debris or damage?

   Yes

   - Go To 7.

   No

   - Replace the damaged or obstructed high pressure connector.
   - Perform the POWERTRAIN VERIFICATION TEST - 6.7L. Refer to **POWERTRAIN VERIFICATION TEST - 6.7L** .
7. **CHECK THE FUEL INJECTOR**

1. Remove the suspect fuel injector.

   Is the fuel injector damaged?

   Yes

   - Replace the external damaged fuel injector and high pressure connector.
   - Perform the POWERTRAIN VERIFICATION TEST - 6.7L. Refer to **POWERTRAIN VERIFICATION TEST - 6.7L** .

   No

   - Go To 8.

8. **INTERNAL DAMAGED FUEL INJECTOR**
   1. With the scan tool, erase DTCs.
   2. Switch the misfiring injector and high pressure connector with an injector and high pressure connector from a cylinder that is firing properly.
   3. Operate the vehicle.

      Did the misfire DTC follow the suspect injectors and high pressure connectors?

      Yes

      - Replace the internal damaged fuel injector and high pressure connector.
      - Perform the POWERTRAIN VERIFICATION TEST - 6.7L. Refer to **POWERTRAIN VERIFICATION TEST - 6.7L** .

      No

      - Go To 9.

9. **CHECK FOR INTERNAL ENGINE DAMAGE**
   1. Perform engine compression test. Refer to **CYLINDER COMPRESSION/LEAKAGE TESTS** .

      Did the suspect cylinder pass the compression test?

      Yes

      - Go To 10.

      No

      - Repair the internal damage to the engine.
      - Perform the POWERTRAIN VERIFICATION TEST - 6.7L. Refer to **POWERTRAIN VERIFICATION TEST - 6.7L** .

10. **CHECK FOR INTERNAL ENGINE DAMAGE**
    1. Perform engine leak down test. Refer to **CYLINDER COMPRESSION/LEAKAGE TESTS** .

       Did the suspect cylinder pass the leak down test?

       Yes

       - Test Complete.

       No

       - Repair the internal damage to the engine.
       - Perform the POWERTRAIN VERIFICATION TEST - 6.7L. Refer to **POWERTRAIN VERIFICATION TEST - 6.7L** .

P0302-CYLINDER 2 MISFIRE

For a complete wiring diagram, **refer to appropriate SYSTEM WIRING DIAGRAMS article** .

THEORY OF OPERATION

The Crankshaft Position (CKP) and Camshaft Position (CMP) Sensors are hall effect type sensors. The Powertrain Control Module (PCM) provides a 5-Volt supply to the position sensor and return circuit. A notch on the crankshaft gear is used to determine the position of the engine by the PCM. As the notch on the crankshaft speed ring or the windows in the back of the camshaft gear move past the position sensor, a signal is generated on the position sensor circuit. The change in engine speed when different calibrated fuel quantities are added by the injector to this cylinder is a measure of how well the cylinder is firing. This DTC is a two trip fault. Active regeneration will be disabled when the mill lamp is on. The PCM will turn off the MIL lamp after the monitor runs and passes three consecutive times.

WHEN MONITORED:

While the engine is idling at operating temperature.

SET CONDITION:

Misfire detected on this cylinder.

POSSIBLE CAUSES

Possible Causes
LOW FUEL
DAMAGED FUEL LINE
VALVE TRAIN
OBSTRUCTED FUEL INJECTOR SUPPLY LINE
DAMAGED OR OBSTRUCTED HIGH PRESSURE CONNECTOR

EXTERNAL DAMAGED FUEL INJECTOR
INTERNAL DAMAGED FUEL INJECTOR
LOW COMPRESSION
EXCESSIVE ENGINE LEAK DOWN

Always perform the Pre-Diagnostic Troubleshooting procedure before proceeding. Refer to PRE-DIAGNOSTIC TROUBLESHOOTING PROCEDURE - 6.7L .

DIAGNOSTIC TEST

1. **LOW FUEL**
    1. Using the scan tool, verify that the fuel level is above 15%.

       Is the fuel level above 15%?

       Yes

       - Go To 2.

       No

       - Add fuel.
       - Go To 2.
2. **OTHER DTCS**
    1. Read the Freeze frame data.

       Is the DTC equal to the freeze frame DTC?

       Yes

       - Go To 3.

       No

       - Repair any other DTCs first.
       - Perform the POWERTRAIN VERIFICATION TEST - 6.7L. Refer to **POWERTRAIN VERIFICATION TEST - 6.7L** .
3. **CHECK FOR DAMAGED FUEL LINE**
    1. Visually inspect the injector supply line for damage.

       Do you have any kinked or bent fuel line?

       Yes

       - Repair or replace the damaged fuel line.

- Perform the POWERTRAIN VERIFICATION TEST - 6.7L. Refer to **POWERTRAIN VERIFICATION TEST - 6.7L** .

No

- Go To 4.

4. **CHECK THE VALVE TRAIN**
   1. Visually inspect the valve train and check the valve lash on the suspect cylinder.

      Is the valve train functional and the lash within the specifications listed in the service information?

      Yes

      - Go To 5.

      No

      - Adjust the lash or fix or repair any damaged components.
      - Perform the POWERTRAIN VERIFICATION TEST - 6.7L. Refer to **POWERTRAIN VERIFICATION TEST - 6.7L** .
5. **CHECK FOR OBSTRUCTED FUEL INJECTOR SUPPLY**
   1. Remove the fuel injector supply line for the suspect cylinder.
   2. Inspect both ends of the fuel injector supply line for damage.
   3. Using shop air pressure, blow out the fuel injector supply line to verify that they are not obstructed.

      Are the fuel lines free of debris or damage?

      Yes

      - Go To 6.

      No

      - Replace the damaged or obstructed fuel injector supply line.
      - Perform the POWERTRAIN VERIFICATION TEST - 6.7L. Refer to **POWERTRAIN VERIFICATION TEST - 6.7L** .
6. **CHECK FOR DAMAGED OR OBSTRUCTED HIGH PRESSURE CONNECTOR**
   1. Remove the high pressure connector for the suspect cylinder.
   2. Inspect both ends of the high pressure connector for signs of damage.
   3. Using shop air pressure, blow out the high pressure connector to verify that it is not obstructed.

      Are the high pressure connectors free of debris or damage?

      Yes

- Go To 7.

No

- Replace the damaged or obstructed high pressure connector.
- Perform the POWERTRAIN VERIFICATION TEST - 6.7L. Refer to **POWERTRAIN VERIFICATION TEST - 6.7L** .

7. **CHECK THE FUEL INJECTOR**
   1. Remove the suspect fuel injector.

      Is the fuel injector damaged?

      Yes

      - Replace the external damaged fuel injector and high pressure connector in accordance with the service information.
      - Perform the POWERTRAIN VERIFICATION TEST - 6.7L. Refer to **POWERTRAIN VERIFICATION TEST - 6.7L** .

      No

      - Go To 8.
8. **CHECK FOR INTERNAL DAMAGED FUEL INJECTOR**
   1. With the scan tool, erase DTCs.
   2. Switch the misfiring injector and high pressure connector with an injector and high pressure connector from a cylinder that is firing properly.
   3. Operate the vehicle.

      Did the misfire DTC follow the suspect injector and high pressure connector?

      Yes

      - Replace the internal damaged fuel injector and high pressure connector in accordance with the service information.
      - Perform the POWERTRAIN VERIFICATION TEST - 6.7L. Refer to **POWERTRAIN VERIFICATION TEST - 6.7L** .

      No

      - Go To 9.
9. **CHECK FOR INTERNAL ENGINE DAMAGE**
   1. Perform engine compression test. Refer to **CYLINDER COMPRESSION/LEAKAGE TESTS** .

      Did the suspect cylinder pass the compression test?

Yes

- Go To 10.

No

- Repair the internal damage to the engine.
- Perform the POWERTRAIN VERIFICATION TEST - 6.7L. Refer to **POWERTRAIN VERIFICATION TEST - 6.7L** .

10. **CHECK FOR INTERNAL ENGINE DAMAGE**
    1. Perform engine leak down test. Refer to **CYLINDER COMPRESSION/LEAKAGE TESTS** .

    Did the suspect cylinder pass the leak down test?

    Yes

    - Test Complete.

    No

    - Repair the internal damage to the engine.
    - Perform the POWERTRAIN VERIFICATION TEST - 6.7L. Refer to **POWERTRAIN VERIFICATION TEST - 6.7L** .

P0303-CYLINDER 3 MISFIRE

For a complete wiring diagram, **refer to appropriate SYSTEM WIRING DIAGRAMS article** .

THEORY OF OPERATION

The Crankshaft Position (CKP) and Camshaft Position (CMP) Sensors are hall effect type sensors. The Powertrain Control Module (PCM) provides a 5-Volt supply to the position sensor and return circuit. A notch on the crankshaft gear is used to determine the position of the engine by the PCM. As the notch on the crankshaft speed ring or the windows in the back of the camshaft gear move past the position sensor, a signal is generated on the position sensor circuit. The change in engine speed when different calibrated fuel quantities are added by the injector to this cylinder is a measure of how well the cylinder is firing. This DTC is a two trip fault. Active regeneration will be disabled when the mill lamp is on. The PCM will turn off the MIL lamp after the monitor runs and passes three consecutive times.

WHEN MONITORED:

While the engine is idling at operating temperature.

SET CONDITION:

Misfire detected on this cylinder.

POSSIBLE CAUSES

Possible Causes
LOW FUEL
DAMAGED FUEL LINE
VALVE TRAIN
OBSTRUCTED FUEL INJECTOR SUPPLY LINE
DAMAGED OR OBSTRUCTED HIGH PRESSURE CONNECTOR
EXTERNAL DAMAGED FUEL INJECTOR
INTERNAL DAMAGED FUEL INJECTOR
LOW COMPRESSION
EXCESSIVE ENGINE LEAK DOWN

Always perform the Pre-Diagnostic Troubleshooting procedure before proceeding. Refer to PRE-DIAGNOSTIC TROUBLESHOOTING PROCEDURE - 6.7L .

DIAGNOSTIC TEST

1. **LOW FUEL**
    1. Using the scan tool, verify that the fuel level is above 15%.

       Is the fuel level above 15%?

       Yes

       - Go To 2.

       No

       - Add fuel, Go To 2.
2. **OTHER DTCS**
    1. Read the Freeze frame data.

       Is the DTC equal to the freeze frame DTC?

       Yes

       - Go To 3.

       No

       - Repair any other DTCs first.
       - Perform the POWERTRAIN VERIFICATION TEST - 6.7L. Refer to **POWERTRAIN VERIFICATION TEST - 6.7L** .
3. **CHECK FOR DAMAGED FUEL LINE**

1. Visually inspect the injector supply line for damage.

   Do you have any kinked or bent fuel line?

   Yes

   - Repair or replace the damaged fuel line.
   - Perform the POWERTRAIN VERIFICATION TEST - 6.7L. Refer to **POWERTRAIN VERIFICATION TEST - 6.7L** .

   No

   - Go To 4.

4. **CHECK THE VALVE TRAIN**
   1. Visually inspect the valve train and check the valve lash on the suspect cylinder.

      Is the valve train functional and the lash within the specifications listed in the service information?

      Yes

      - Go To 5.

      No

      - Adjust the lash or fix or repair any damaged components.
      - Perform the POWERTRAIN VERIFICATION TEST - 6.7L. Refer to **POWERTRAIN VERIFICATION TEST - 6.7L** .

5. **CHECK FOR OBSTRUCTED FUEL INJECTOR SUPPLY**
   1. Remove the fuel injector supply line for the suspect cylinder.
   2. Inspect both ends of the fuel injector supply lines for damage.
   3. Using shop air pressure, blow out the fuel injector supply lines to verify that they are not obstructed.

      Are the fuel lines free of debris or damage?

      Yes

      - Go To 6.

      No

      - Replace the damaged or obstructed fuel injector supply line in accordance with the service information.
      - Perform the POWERTRAIN VERIFICATION TEST - 6.7L. Refer to **POWERTRAIN VERIFICATION TEST - 6.7L** .

6. **CHECK FOR DAMAGED OR OBSTRUCTED HIGH PRESSURE CONNECTOR**
    1. Remove the high pressure connector for the suspect cylinder.
    2. Inspect both ends of the high pressure connector for signs of damage.
    3. Using shop air pressure, blow out the high pressure connector to verify that it is not obstructed.

    Are the high pressure connectors free of debris or damage?

    Yes

    - Go To 7.

    No

    - Replace the damaged or obstructed high pressure connector.
    - Perform the POWERTRAIN VERIFICATION TEST - 6.7L. Refer to **POWERTRAIN VERIFICATION TEST - 6.7L** .
7. **CHECK THE FUEL INJECTOR**
    1. Remove the suspect fuel injector.

    Are the fuel injectors damaged?

    Yes

    - Replace the external damaged fuel injector and high pressure connector in accordance with the service information.
    - Perform the POWERTRAIN VERIFICATION TEST - 6.7L. Refer to **POWERTRAIN VERIFICATION TEST - 6.7L** .

    No

    - Go To 8.
8. **CHECK FOR INTERNAL DAMAGED FUEL INJECTOR**
    1. With the scan tool, erase DTCs.
    2. Switch the misfiring injector and high pressure connector with an injector and high pressure connector from a cylinder that are firing properly.
    3. Operate the vehicle.

    Did the misfire DTC follow the suspect injectors and high pressure connectors?

    Yes

    - Replace the internal damaged fuel injector and high pressure connector in accordance with the service information.
    - Perform the POWERTRAIN VERIFICATION TEST - 6.7L. Refer to **POWERTRAIN**

VERIFICATION TEST - 6.7L .

No

- Go To 9.

9. **CHECK FOR INTERNAL ENGINE DAMAGE**
   1. Perform engine compression test. Refer to **CYLINDER COMPRESSION/LEAKAGE TESTS** .

      Did the suspect cylinder pass the compression test?

      Yes

      - Go To 10.

      No

      - Repair the internal damage to the engine.
      - Perform the POWERTRAIN VERIFICATION TEST - 6.7L. Refer to **POWERTRAIN VERIFICATION TEST - 6.7L** .
10. **CHECK FOR INTERNAL ENGINE DAMAGE**
   1. Perform engine leak down test. Refer to **CYLINDER COMPRESSION/LEAKAGE TESTS** .

      Did the suspect cylinder pass the leak down test?

      Yes

      - Test Complete.

      No

      - Repair the internal damage to the engine.
      - Perform the POWERTRAIN VERIFICATION TEST - 6.7L. Refer to **POWERTRAIN VERIFICATION TEST - 6.7L** .

P0304-CYLINDER 4 MISFIRE

For a complete wiring diagram, **refer to appropriate SYSTEM WIRING DIAGRAMS article** .

THEORY OF OPERATION

The Crankshaft Position (CKP) and Camshaft Position (CMP) Sensors are hall effect type sensors. The Powertrain Control Module (PCM) provides a 5-Volt supply to the position sensor and return circuit. A notch on the crankshaft gear is used to determine the position of the engine by the PCM. As the notch on the crankshaft speed ring or the windows in the back of the camshaft gear move past the position sensor, a signal is generated on the position sensor circuit. The change in engine speed when different calibrated fuel quantities are added by the injector to this cylinder is a measure of how well the cylinder is firing. This DTC is a two trip

fault. Active regeneration will be disabled when the mill lamp is on. The PCM will turn off the MIL lamp after the monitor runs and passes three consecutive times.

WHEN MONITORED:

While the engine is idling at operating temperature.

SET CONDITION:

Misfire detected on this cylinder.

POSSIBLE CAUSES

Possible Causes
LOW FUEL
DAMAGED FUEL LINE
VALVE TRAIN
OBSTRUCTED FUEL INJECTOR SUPPLY LINE
DAMAGED OR OBSTRUCTED HIGH PRESSURE CONNECTOR
EXTERNAL DAMAGED FUEL INJECTOR
INTERNAL DAMAGED FUEL INJECTOR
LOW COMPRESSION
EXCESSIVE ENGINE LEAK DOWN

Always perform the Pre-Diagnostic Troubleshooting procedure before proceeding. Refer to PRE-DIAGNOSTIC TROUBLESHOOTING PROCEDURE - 6.7L .

DIAGNOSTIC TEST

1. **LOW FUEL**
    1. Using the scan tool, verify that the fuel level is above 15%.

       Is the fuel level above 15%?

       Yes

       - Go To 2.

       No

       - Add fuel, Go To 2.
       - Perform the POWERTRAIN VERIFICATION TEST - 6.7L. Refer to **POWERTRAIN VERIFICATION TEST - 6.7L** .
2. **OTHER DTCS**
    1. Read the Freeze frame data.

Is the DTC equal to the freeze frame DTC?

Yes

- Go To 3.

No

- Repair any other DTCs first.
- Perform the POWERTRAIN VERIFICATION TEST - 6.7L. Refer to **POWERTRAIN VERIFICATION TEST - 6.7L** .

3. **CHECK FOR DAMAGED FUEL LINE**
   1. Visually inspect the injector supply line for damage.

      Do you have any kinked or bent fuel line?

      Yes

      - Repair or replace the damaged fuel line.
      - Perform the POWERTRAIN VERIFICATION TEST - 6.7L. Refer to **POWERTRAIN VERIFICATION TEST - 6.7L** .

      No

      - Go To 4.
4. **CHECK THE VALVE TRAIN**
   1. Visually inspect the valve train and check the valve lash on the suspect cylinder.

      Is the valve train functional and the lash within the specifications listed in the service information?

      Yes

      - Go To 5.

      No

      - Adjust the lash or fix or repair any damaged component(s).
      - Perform the POWERTRAIN VERIFICATION TEST - 6.7L. Refer to **POWERTRAIN VERIFICATION TEST - 6.7L** .
5. **CHECK FOR OBSTRUCTED FUEL INJECTOR SUPPLY**
   1. Remove the fuel injector supply line for the suspect cylinder.
   2. Inspect both ends of the fuel injector supply line for damage.
   3. Using shop air pressure, blow out the fuel injector supply lines to verify that they are not obstructed.

Are the fuel lines free of debris or damage?

Yes

- Go To 6.

No

- Replace the damaged or obstructed fuel injector supply line in accordance with the service information.
- Perform the POWERTRAIN VERIFICATION TEST - 6.7L. Refer to **POWERTRAIN VERIFICATION TEST - 6.7L** .

6. **CHECK FOR DAMAGED OR OBSTRUCTED HIGH PRESSURE CONNECTOR**
   1. Remove the high pressure connector for the suspect cylinder.
   2. Inspect both ends of the high pressure connector for signs of damage.
   3. Using shop air pressure, blow out the high pressure connectors to verify that it is not obstructed.

   Are the high pressure connectors free of debris or damage?

   Yes

   - Go To 7.

   No

   - Replace the damaged or obstructed high pressure connector in accordance with the service information.
   - Perform the POWERTRAIN VERIFICATION TEST - 6.7L. Refer to **POWERTRAIN VERIFICATION TEST - 6.7L** .
7. **CHECK THE FUEL INJECTOR**
   1. Remove the suspect fuel injector.

   Are the fuel injectors damaged?

   Yes

   - Replace the external damaged fuel injector and high pressure connector in accordance with the service information.
   - Perform the POWERTRAIN VERIFICATION TEST - 6.7L. Refer to **POWERTRAIN VERIFICATION TEST - 6.7L** .

   No

   - Go To 8.
8. **CHECK FOR INTERNAL DAMAGED FUEL INJECTOR**

1. With the scan tool, erase DTCs.
2. Switch the misfiring injectors and high pressure connector with an injector and high pressure connector from a cylinder that is firing properly.
3. Operate the vehicle.

   Did the misfire DTC follow the suspect injectors and high pressure connectors?

   Yes

   - Replace the internal damaged fuel injector and high pressure connector in accordance with the service information.
   - Perform the POWERTRAIN VERIFICATION TEST - 6.7L. Refer to **POWERTRAIN VERIFICATION TEST - 6.7L** .

   No

   - Go To 9.

9. **CHECK FOR INTERNAL ENGINE DAMAGE**
   1. Perform engine compression test. Refer to **CYLINDER COMPRESSION/LEAKAGE TESTS** .

      Did the suspect cylinder pass the compression test?

      Yes

      - Go To 10.

      No

      - Repair the internal damage to the engine.
      - Perform the POWERTRAIN VERIFICATION TEST - 6.7L. Refer to **POWERTRAIN VERIFICATION TEST - 6.7L** .

10. **CHECK FOR INTERNAL ENGINE DAMAGE**
    1. Perform engine leak down test. Refer to **CYLINDER COMPRESSION/LEAKAGE TESTS** .

       Did the suspect cylinder pass the leak down test?

       Yes

       - Test Complete.

       No

       - Repair the internal damage to the engine.
       - Perform the POWERTRAIN VERIFICATION TEST - 6.7L. Refer to **POWERTRAIN VERIFICATION TEST - 6.7L** .

P0305-CYLINDER 5 MISFIRE

For a complete wiring diagram, **refer to appropriate SYSTEM WIRING DIAGRAMS article** .

THEORY OF OPERATION

The Crankshaft Position (CKP) and Camshaft Position (CMP) Sensors are hall effect type sensors. The Powertrain Control Module (PCM) provides a 5-Volt supply to the position sensor and return circuit. A notch on the crankshaft gear is used to determine the position of the engine by the PCM. As the notch on the crankshaft speed ring or the windows in the back of the camshaft gear move past the position sensor, a signal is generated on the position sensor circuit. The change in engine speed when different calibrated fuel quantities are added by the injector to this cylinder is a measure of how well the cylinder is firing. This DTC is a two trip fault. Active regeneration will be disabled when the mill lamp is on. The PCM will turn off the MIL lamp after the monitor runs and passes three consecutive times.

WHEN MONITORED:

While the engine is idling at operating temperature.

SET CONDITION:

Misfire detected on this cylinder.

POSSIBLE CAUSES

Possible Causes
LOW FUEL
DAMAGED FUEL LINE
VALVE TRAIN
OBSTRUCTED FUEL INJECTOR SUPPLY LINE
DAMAGED OR OBSTRUCTED HIGH PRESSURE CONNECTOR
EXTERNAL DAMAGED FUEL INJECTOR
INTERNAL DAMAGED FUEL INJECTOR
LOW COMPRESSION
EXCESSIVE ENGINE LEAK DOWN

Always perform the Pre-Diagnostic Troubleshooting procedure before proceeding. Refer to PRE-DIAGNOSTIC TROUBLESHOOTING PROCEDURE - 6.7L .

DIAGNOSTIC TEST

1. **LOW FUEL**
    1. Using the scan tool, verify that the fuel level is above 15%.

       Is the fuel level above 15%?

Yes

- Go To 2.

No

- Add fuel.
- Go To 2.

2. **OTHER DTCS**
   1. Read the Freeze frame data.

      Is the DTC equal to the freeze frame DTC?

      Yes

      - Go To 3.

      No

      - Repair any other DTCs first.
      - Perform the POWERTRAIN VERIFICATION TEST - 6.7L. Refer to **POWERTRAIN VERIFICATION TEST - 6.7L** .
3. **CHECK FOR DAMAGED FUEL LINE**
   1. Visually inspect the injector supply line for damage.

      Do you have any kinked or bent fuel line?

      Yes

      - Repair or replace the damaged fuel line.
      - Perform the POWERTRAIN VERIFICATION TEST - 6.7L. Refer to **POWERTRAIN VERIFICATION TEST - 6.7L** .

      No

      - Go To 4.
4. **CHECK THE VALVE TRAIN**
   1. Visually inspect the valve train and check the valve lash on the suspect cylinder.

      Is the valve train functional and the lash within the specifications listed in the service information?

      Yes

      - Go To 5.

No

- Adjust the lash or fix or repair any damaged components.
- Perform the POWERTRAIN VERIFICATION TEST - 6.7L. Refer to **POWERTRAIN VERIFICATION TEST - 6.7L** .

5. **CHECK FOR OBSTRUCTED FUEL INJECTOR SUPPLY**
   1. Remove the fuel injector supply lines for the suspect cylinder.
   2. Inspect both ends of the fuel injector supply lines for damage.
   3. Using shop air pressure, blow out the fuel injector supply lines to verify that they are not obstructed.

   Are the fuel lines free of debris or damage?

   Yes

   - Go To 6.

   No

   - Replace the damaged or obstructed fuel injector supply lines in accordance with the service information.
   - Perform the POWERTRAIN VERIFICATION TEST - 6.7L. Refer to **POWERTRAIN VERIFICATION TEST - 6.7L** .

6. **CHECK FOR DAMAGED OR OBSTRUCTED HIGH PRESSURE CONNECTOR**
   1. Remove the high pressure connectors for the suspect cylinder.
   2. Inspect both ends of the high pressure connector for signs of damage.
   3. Using shop air pressure, blow out the high pressure connector to verify that they are not obstructed.

   Are the high pressure connector free of debris or damage?

   Yes

   - Go To 7.

   No

   - Replace the damaged or obstructed high pressure connector in accordance with the service information.
   - Perform the POWERTRAIN VERIFICATION TEST - 6.7L. Refer to **POWERTRAIN VERIFICATION TEST - 6.7L** .

7. **CHECK THE FUEL INJECTOR**
   1. Remove the suspect fuel injector.

   Are the fuel injectors damaged?

Yes

- Replace the external damaged fuel injector and high pressure connector in accordance with the service information.
- Perform the POWERTRAIN VERIFICATION TEST - 6.7L. Refer to **POWERTRAIN VERIFICATION TEST - 6.7L** .

No

- Go To 8.

8. **CHECK FOR INTERNAL DAMAGED FUEL INJECTOR**
   1. With the scan tool, erase DTCs.
   2. Switch the misfiring injector and high pressure connector with an injector and high pressure connector from a cylinder that is firing properly.
   3. Operate the vehicle.

   Did the misfire DTC follow the suspect injector and high pressure connector?

   Yes

   - Replace the internal damaged fuel injector and high pressure connector in accordance with the service information.
   - Perform the POWERTRAIN VERIFICATION TEST - 6.7L. Refer to **POWERTRAIN VERIFICATION TEST - 6.7L** .

   No

   - Go To 9.

9. **CHECK FOR INTERNAL ENGINE DAMAGE**
   1. Perform engine compression test. Refer to **CYLINDER COMPRESSION/LEAKAGE TESTS** .

   Did the suspect cylinder pass the compression test?

   Yes

   - Go To 10.

   No

   - Repair the internal damage to the engine.
   - Perform the POWERTRAIN VERIFICATION TEST - 6.7L. Refer to **POWERTRAIN VERIFICATION TEST - 6.7L** .

10. **CHECK FOR INTERNAL ENGINE DAMAGE**
    1. Perform engine leak down test. Refer to **CYLINDER COMPRESSION/LEAKAGE TESTS** .

Did the suspect cylinder pass the leak down test?

Yes

- Test Complete.

No

- Repair the internal damage to the engine.
- Perform the POWERTRAIN VERIFICATION TEST - 6.7L. Refer to **POWERTRAIN VERIFICATION TEST - 6.7L** .

P0306-CYLINDER 6 MISFIRE

For a complete wiring diagram, **refer to appropriate SYSTEM WIRING DIAGRAMS article** .

THEORY OF OPERATION

The Crankshaft Position (CKP) and Camshaft Position (CMP) Sensors are hall effect type sensors. The Powertrain Control Module (PCM) provides a 5-Volt supply to the position sensor and return circuit. A notch on the crankshaft gear is used to determine the position of the engine by the PCM. As the notch on the crankshaft speed ring or the windows in the back of the camshaft gear move past the position sensor, a signal is generated on the position sensor circuit. The change in engine speed when different calibrated fuel quantities are added by the injector to this cylinder is a measure of how well the cylinder is firing. This DTC is a two trip fault. Active regeneration will be disabled when the mill lamp is on. The PCM will turn off the MIL lamp after the monitor runs and passes three consecutive times.

WHEN MONITORED:

While the engine is idling at operating temperature.

SET CONDITION:

Misfire detected on this cylinder.

POSSIBLE CAUSES

Possible Causes
LOW FUEL
DAMAGED FUEL LINE
VALVE TRAIN
OBSTRUCTED FUEL INJECTOR SUPPLY LINE
DAMAGED OR OBSTRUCTED HIGH PRESSURE CONNECTOR
EXTERNAL DAMAGED FUEL INJECTOR
INTERNAL DAMAGED FUEL INJECTOR
LOW COMPRESSION

EXCESSIVE ENGINE LEAK DOWN

Always perform the Pre-Diagnostic Troubleshooting procedure before proceeding. Refer to PRE-DIAGNOSTIC TROUBLESHOOTING PROCEDURE - 6.7L .

DIAGNOSTIC TEST

1. **LOW FUEL**
    1. Using the scan tool, verify that the fuel level is above 15%.

       Is the fuel level above 15%?

       Yes

       - Go To 2.

       No

       - Add fuel.
       - Go To 2.
2. **OTHER DTCS**
    1. Read the Freeze frame data.

       Is the DTC equal to the freeze frame DTC?

       Yes

       - Go To 3.

       No

       - Repair any other DTCs first.
       - Perform the POWERTRAIN VERIFICATION TEST - 6.7L. Refer to **POWERTRAIN VERIFICATION TEST - 6.7L** .
3. **CHECK FOR DAMAGED FUEL LINE**
    1. Visually inspect the injector supply line for damage.

       Do you have any kinked or bent fuel line?

       Yes

       - Repair or replace the damaged fuel line.
       - Perform the POWERTRAIN VERIFICATION TEST - 6.7L. Refer to **POWERTRAIN VERIFICATION TEST - 6.7L** .

No

- Go To 4.

4. **CHECK THE VALVE TRAIN**
   1. Visually inspect the valve train and check the valve lash on the suspect cylinder.

      Is the valve train functional and the lash within the specifications listed in the service information?

      Yes

      - Go To 5.

      No

      - Adjust the lash or fix or repair any damaged component(s).
      - Perform the POWERTRAIN VERIFICATION TEST - 6.7L. Refer to **POWERTRAIN VERIFICATION TEST - 6.7L** .

5. **CHECK FOR OBSTRUCTED FUEL INJECTOR SUPPLY**
   1. Remove the fuel injector supply line for the suspect cylinder.
   2. Inspect both ends of the fuel injector supply lines for damage.
   3. Using shop air pressure, blow out the fuel injector supply line to verify that it is not obstructed.

      Are the fuel lines free of debris or damage?

      Yes

      - Go To 6.

      No

      - Replace the damaged or obstructed fuel injector supply line in accordance with the service information.
      - Perform the POWERTRAIN VERIFICATION TEST - 6.7L. Refer to **POWERTRAIN VERIFICATION TEST - 6.7L** .

6. **CHECK FOR DAMAGED OR OBSTRUCTED HIGH PRESSURE CONNECTOR**
   1. Remove the high pressure connector for the suspect cylinder.
   2. Inspect both ends of the high pressure connectors for signs of damage.
   3. Using shop air pressure, blow out the high pressure connector to verify that they are not obstructed.

      Are the high pressure connectors free of debris or damage?

      Yes

      - Go To 7.

No

- Replace the damaged or obstructed high pressure connector in accordance with the service information.
- Perform the POWERTRAIN VERIFICATION TEST - 6.7L. Refer to **POWERTRAIN VERIFICATION TEST - 6.7L** .

7. **CHECK THE FUEL INJECTOR**
   1. Remove the suspect fuel injector.

      Are the fuel injectors damaged?

      Yes

      - Replace the external damaged fuel injector and high pressure connector in accordance with the service information.
      - Perform the POWERTRAIN VERIFICATION TEST - 6.7L. Refer to **POWERTRAIN VERIFICATION TEST - 6.7L** .

      No

      - Go To 8.
8. **CHECK FOR INTERNAL DAMAGED FUEL INJECTOR**
   1. With the scan tool, erase DTCs.
   2. Switch the misfiring injector and high pressure connector with an injector and high pressure connector from a cylinder that is firing properly.
   3. Operate the vehicle.

      Did the misfire DTC follow the suspect injectors and high pressure connectors?

      Yes

      - Replace the internal damaged fuel injector and high pressure connector in accordance with the service information.
      - Perform the POWERTRAIN VERIFICATION TEST - 6.7L. Refer to **POWERTRAIN VERIFICATION TEST - 6.7L** .

      No

      - Go To 9.
9. **CHECK FOR INTERNAL ENGINE DAMAGE**
   1. Perform engine compression test. Refer to **CYLINDER COMPRESSION/LEAKAGE TESTS** .

      Did the suspect cylinder pass the compression test?

Yes

- Go To 10.

No

- Repair the internal damage to the engine.
- Perform the POWERTRAIN VERIFICATION TEST - 6.7L. Refer to **POWERTRAIN VERIFICATION TEST - 6.7L** .

10. **CHECK FOR INTERNAL ENGINE DAMAGE**
    1. Perform engine leak down test. Refer to **CYLINDER COMPRESSION/LEAKAGE TESTS** .

    Did the suspect cylinder pass the leak down test?

    Yes

    - Test Complete.

    No

    - Repair the internal damage to the engine.
    - Perform the POWERTRAIN VERIFICATION TEST - 6.7L. Refer to **POWERTRAIN VERIFICATION TEST - 6.7L** .

P0335-CRANKSHAFT POSITION SENSOR CIRCUIT

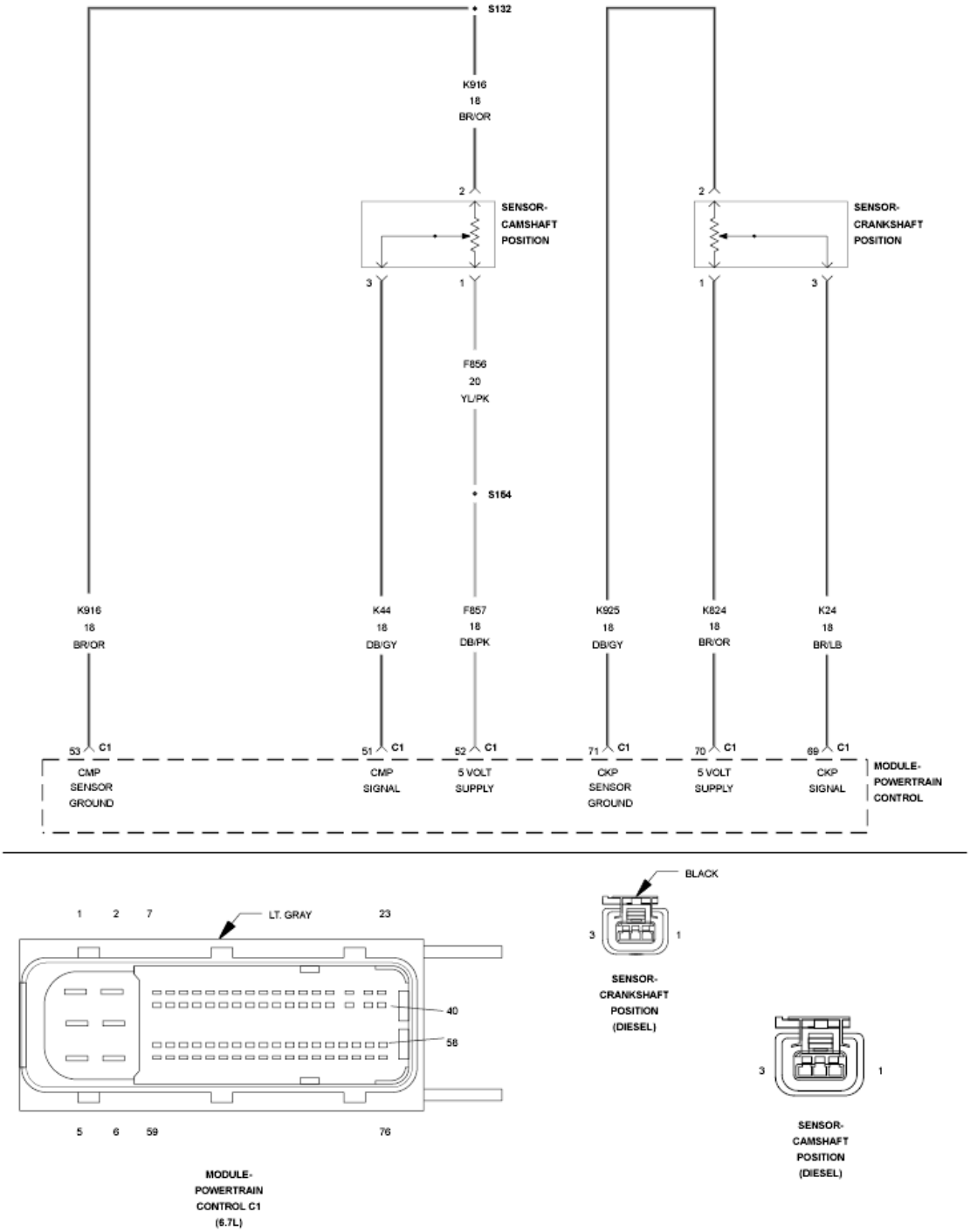

Fig. 114: Crankshaft Position Sensor & Camshaft Position Sensor Circuit Schematic
Courtesy of CHRYSLER GROUP, LLC

For a complete wiring diagram, **refer to appropriate SYSTEM WIRING DIAGRAMS article** .

THEORY OF OPERATION

The Powertrain Control Module (PCM) provides a 5-Volt supply to the Crankshaft Position Sensor (CKP) on

the sensor supply circuit. The PCM also provides a ground on the sensor return circuit. The Crankshaft Position Sensor provides a signal to the PCM on the Crankshaft Position Sensor Signal circuit. The CKP Sensor generates a signal to the PCM as a notch in the crank pulley travels by the sensor. The PCM uses this signal to determine engine speed and engine position. The PCM illuminates the MIL lamp immediately after the diagnostic runs and fails. During this time the Camshaft Position Sensor is used to provide engine speed and position information to the PCM. The customer may experience an engine misfire as control switches from the primary to the backup speed sensor. The PCM will turn off the MIL lamp when the diagnostic runs and passes in four consecutive drive cycles.

WHEN MONITORED:

While the engine is running.

SET CONDITION:

The Powertrain Control Module (PCM) no longer detects a signal from the Crankshaft Position Sensor.

POSSIBLE CAUSES

Possible Causes
PHYSICAL DAMAGE
(K24) SIGNAL CIRCUIT OPEN/HIGH RESISTANCE
(K824) 5-VOLT SUPPLY CIRCUIT OPEN/HIGH RESISTANCE
(K925) RETURN CIRCUIT OPEN/HIGH RESISTANCE
(K24) SIGNAL CIRCUIT SHORTED TO THE (K925) RETURN CIRCUIT
(K824) 5-VOLT SUPPLY CIRCUIT SHORTED TO THE (K925) RETURN CIRCUIT
(K24) SIGNAL CIRCUIT SHORTED TO THE (K824) 5-VOLT SUPPLY CIRCUIT
(K24) SIGNAL CIRCUIT SHORTED TO GROUND
(K824) 5-VOLT SUPPLY CIRCUIT SHORTED TO BATTERY NEGATIVE
CKP SENSOR
POWERTRAIN CONTROL MODULE (PCM)

Always perform the Pre-Diagnostic Troubleshooting procedure before proceeding. Refer to PRE-DIAGNOSTIC TROUBLESHOOTING PROCEDURE - 6.7L .

DIAGNOSTIC TEST

1. **ACTIVE DTC**

   NOTE: If there are any 5-Volt supply DTCs present, repair those DTCs before proceeding.

   1. Turn the ignition on.
   2. With the scan tool, record all Freeze frame data.
   3. With the scan tool, erase DTCs.

4. Turn the ignition off for 75 seconds.
5. Start, or attempt to start the engine.
6. With the scan tool, read DTCs.

   Did the DTC reset?

   Yes

   - Go To 2.

   No

   - Perform the INTERMITTENT CONDITION - 6.7L diagnostic procedure. Refer to **INTERMITTENT CONDITION - 6.7L** .

2. **CHECK FOR PHYSICAL DAMAGE**
   1. Turn the ignition off.
   2. Visually inspect the CKP Sensor, accessory belt, CKP Sensor connector, and the PCM C1 harness connector.

      Is there any physical damage present?

      Yes

      - Repair or replace the CKP Sensor, accessory belt, or harness.
      - Perform the POWERTRAIN VERIFICATION TEST - 6.7L. Refer to **POWERTRAIN VERIFICATION TEST - 6.7L** .

      No

      - Go To 3.

3. **CHECK THE (K24) SIGNAL CIRCUIT FOR AN OPEN/HIGH RESISTANCE**

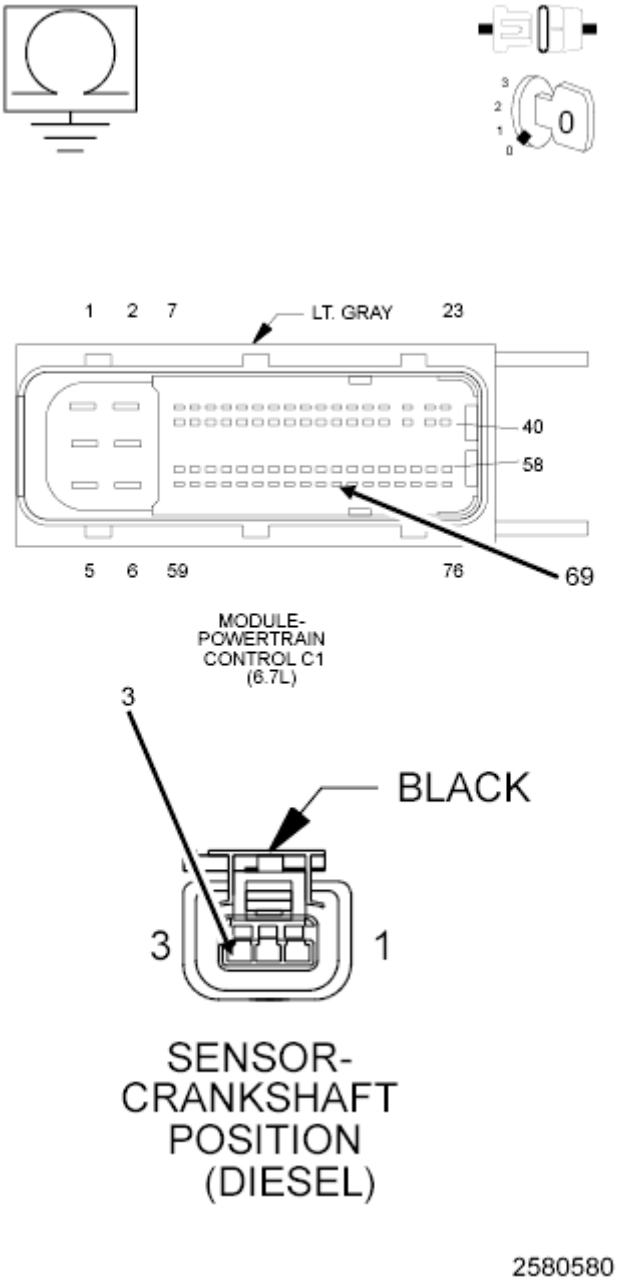

Fig. 115: Checking CKP Signal Circuit For Open Or High Resistance
Courtesy of CHRYSLER GROUP, LLC

1. Disconnect the PCM C1 harness connector.
2. Disconnect the CKP Sensor harness connector.

NOTE: Check connectors - Clean/repair as necessary.

3. Measure the resistance of the (K24) CKP Signal circuit between the PCM C1 harness connector and the CKP Sensor harness connector.

Is the resistance below 5.0 Ohms?

Yes

- Go To 4.

No

- Repair the (K24) CKP Signal circuit for an open or high resistance.
- Perform the POWERTRAIN VERIFICATION TEST - 6.7L. Refer to **POWERTRAIN VERIFICATION TEST - 6.7L** .

4. **CHECK THE (K824) 5-VOLT SUPPLY CIRCUIT FOR AN OPEN/HIGH RESISTANCE**

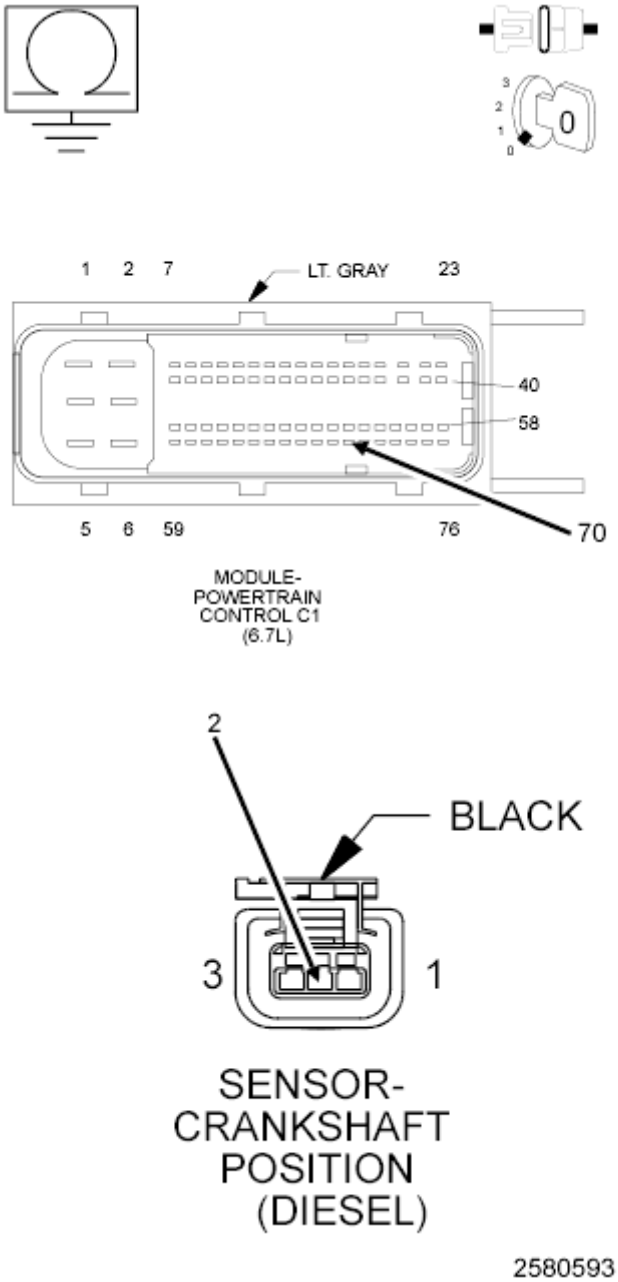

Fig. 116: Checking CKP 5-Volt Supply Circuit For An Open Or High Resistance
Courtesy of CHRYSLER GROUP, LLC

1. Measure the resistance of the (K824) 5-Volt Supply circuit between the PCM C1 harness connector and the CKP Sensor harness connector.

   Is the resistance below 5.0 Ohms?

   Yes

   - Go To 5.

No

- Repair the (K824) 5-Volt Supply circuit for an open or high resistance.
- Perform the POWERTRAIN VERIFICATION TEST - 6.7L. Refer to **POWERTRAIN VERIFICATION TEST - 6.7L** .

5. **CHECK THE (K925) RETURN CIRCUIT FOR AN OPEN/HIGH RESISTANCE**

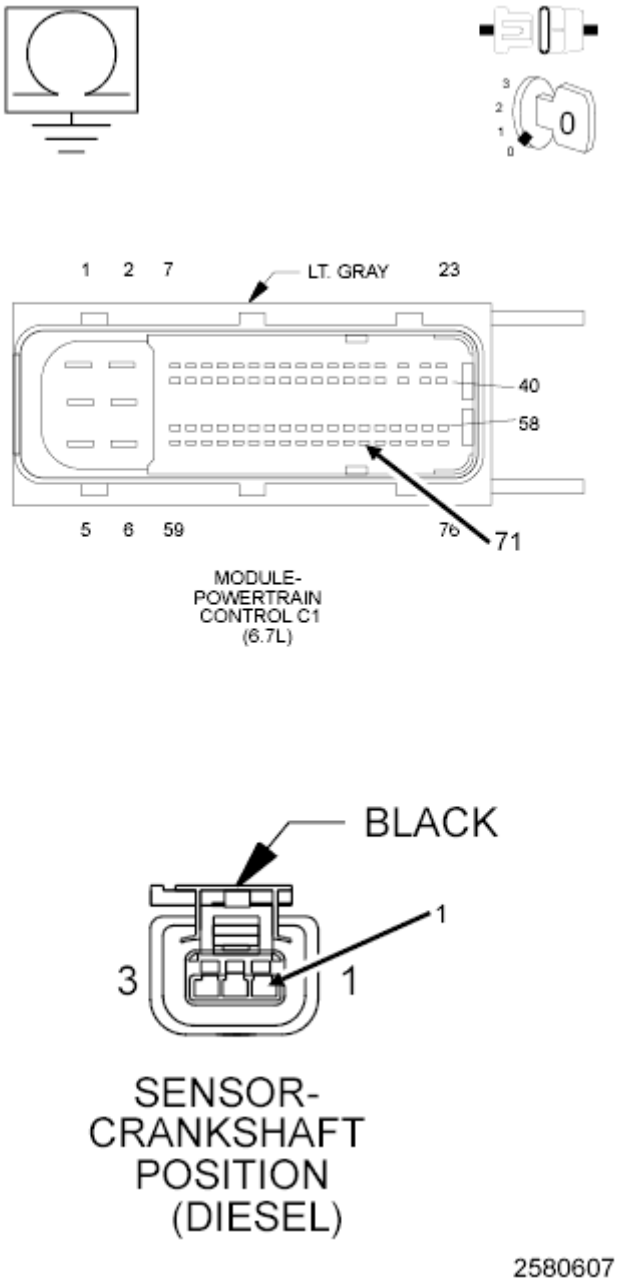

Fig. 117: Checking CKP Return Circuit For An Open Or High Resistance
Courtesy of CHRYSLER GROUP, LLC

1. Measure the resistance of the (K925) CKP Return circuit between the PCM C1 harness connector

and the CKP Sensor harness connector.

Is the resistance below 5.0 Ohms?

Yes

- Go To 6.

No

- Repair the (K925) CKP Return circuit for an open or high resistance.
- Perform the POWERTRAIN VERIFICATION TEST - 6.7L. Refer to **POWERTRAIN VERIFICATION TEST - 6.7L** .

6. **CHECK FOR THE (K24) SIGNAL CIRCUIT SHORTED TO THE (K925) RETURN CIRCUIT**

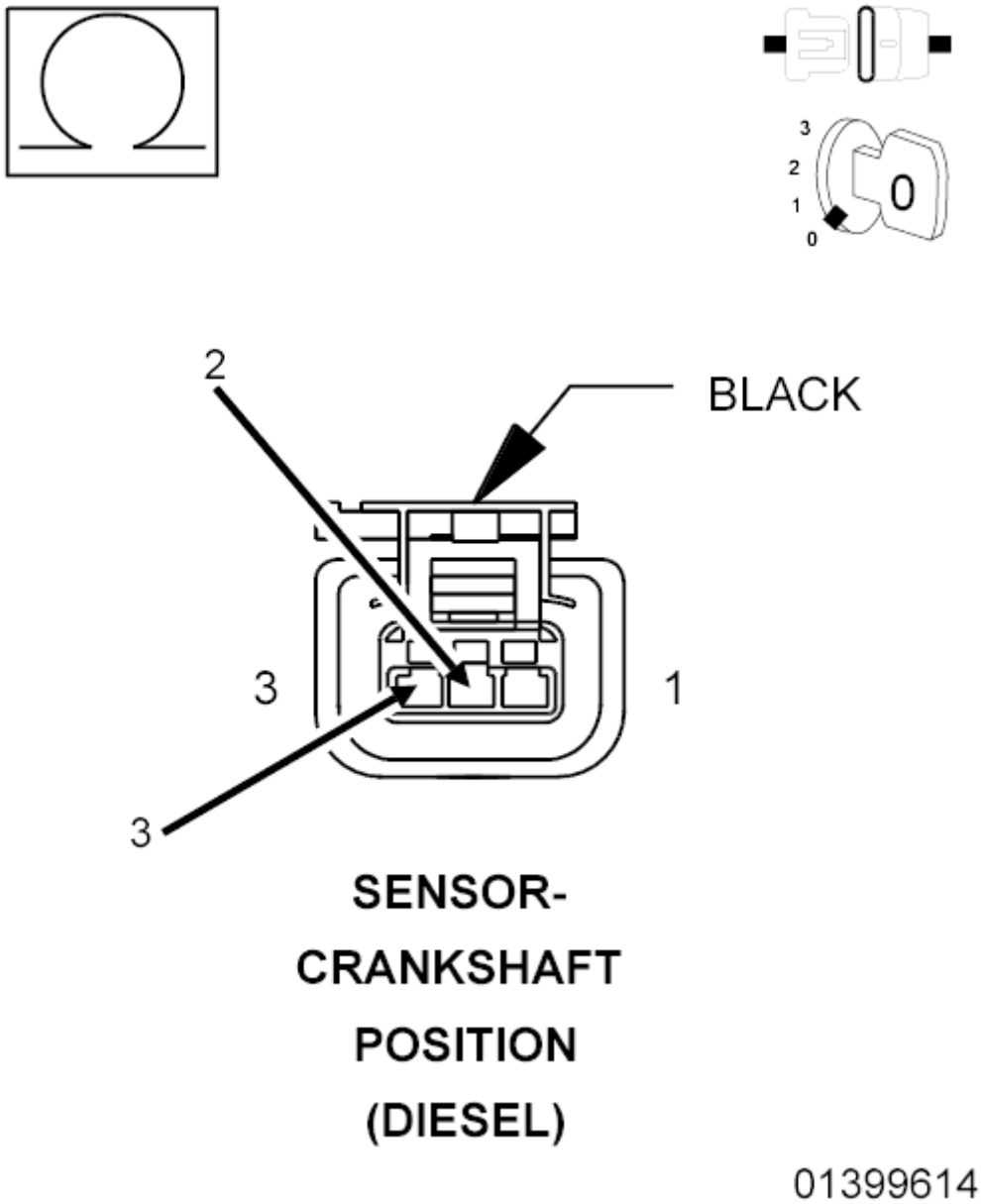

Fig. 118: Checking Signal Circuit For Short To Return Circuit
Courtesy of CHRYSLER GROUP, LLC

1. Measure the resistance between the (K24) CKP Signal circuit and the (K925) CKP Return circuit at the CKP Sensor harness connector.

   Is the resistance below 10k Ohms?

   Yes

   - Repair the short between the (K24) CKP Signal circuit and the (K925) CKP Return circuit.
   - Perform the POWERTRAIN VERIFICATION TEST - 6.7L. Refer to **POWERTRAIN VERIFICATION TEST - 6.7L** .

No

- Go To 7.

7. **CHECK FOR THE (K24) SIGNAL CIRCUIT SHORTED TO THE (K824) 5-VOLT SUPPLY CIRCUIT**

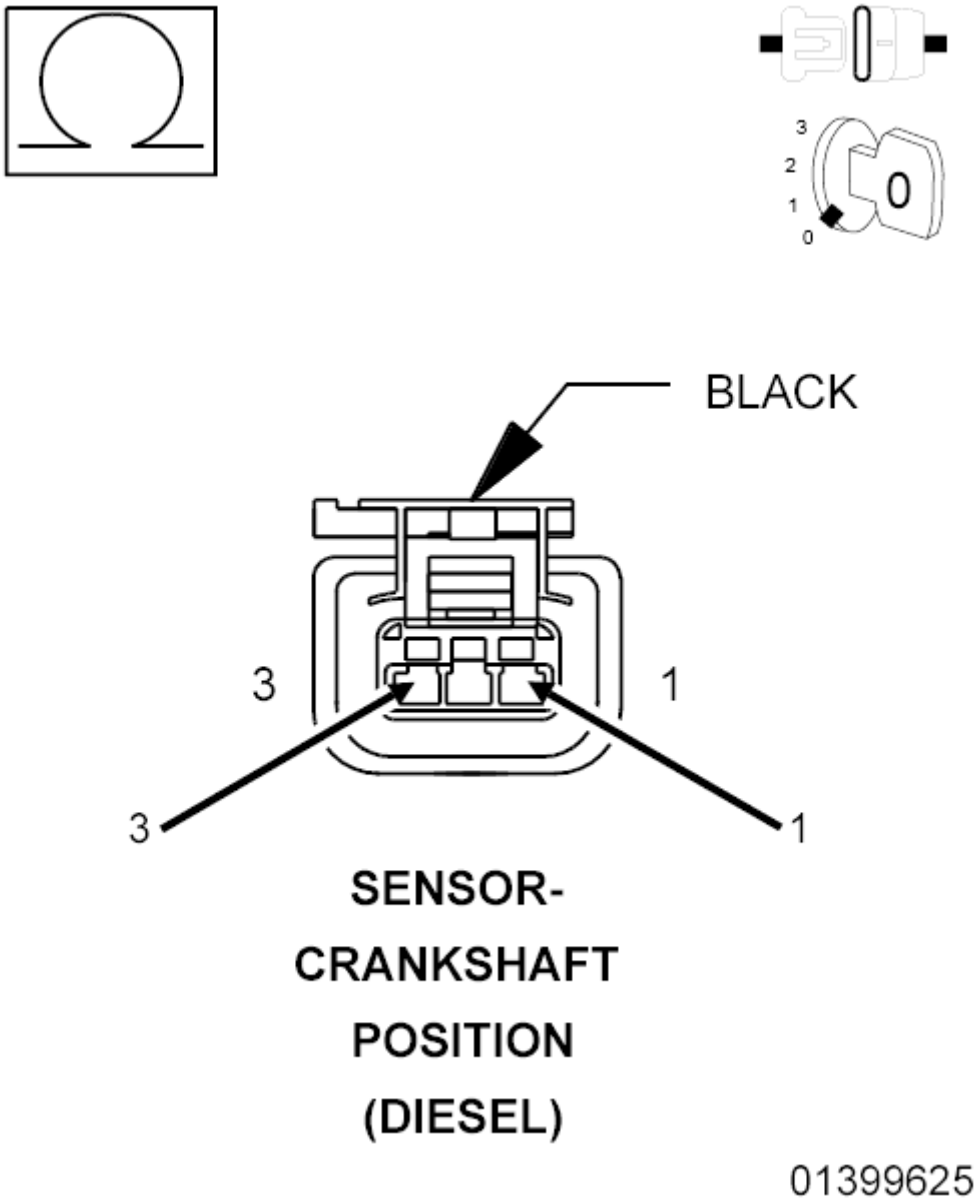

Fig. 119: Checking Signal Circuit For Short To 5-Volt Supply Circuit
Courtesy of CHRYSLER GROUP, LLC

1. Measure the resistance between the (K24) CKP Signal circuit and the (K824) 5-Volt Supply circuit in the CKP Sensor harness connector.

   Is the resistance below 10k Ohms?

Yes

- Repair the short between the (K24) CKP Signal circuit and the (K824) 5-Volt Supply circuit.
- Perform the POWERTRAIN VERIFICATION TEST - 6.7L. Refer to **POWERTRAIN VERIFICATION TEST - 6.7L** .

No

- Go To 8.

8. **CHECK THE (K24) SIGNAL CIRCUIT FOR A SHORT GROUND**

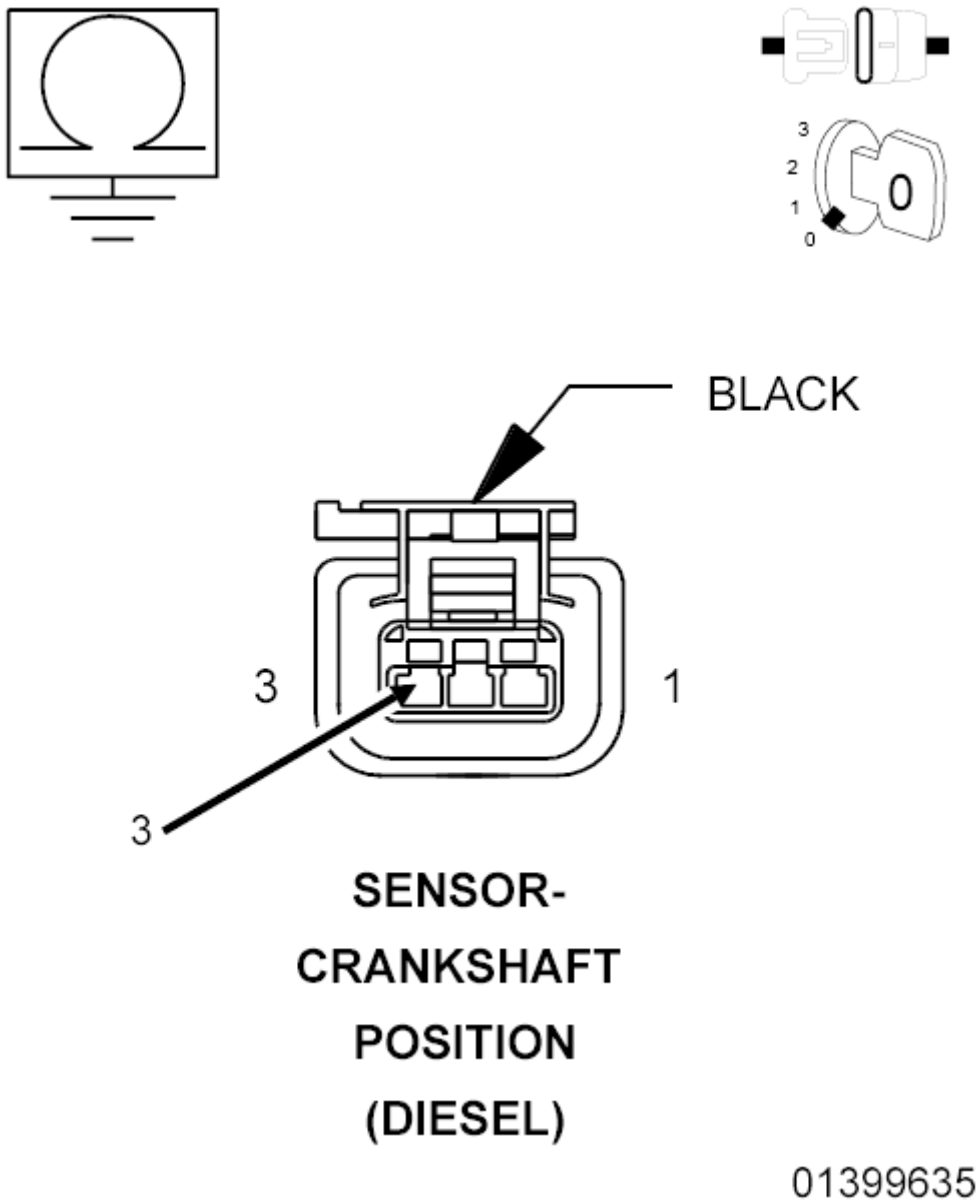

Fig. 120: Checking CKP Signal Circuit For Short To Ground
Courtesy of CHRYSLER GROUP, LLC

1. Measure the resistance between ground and the (K24) CKP Signal circuit at the CKP Sensor harness connector.

   Is the resistance below 10k Ohms?

   Yes

   - Repair the (K24) CKP Signal circuit for a short to ground.
   - Perform the POWERTRAIN VERIFICATION TEST - 6.7L. Refer to **POWERTRAIN VERIFICATION TEST - 6.7L** .

   No

   - Go To 9.

9. **CHECK THE CKP SENSOR**
   1. Measure the resistance between the (K824) 5-Volt Supply circuit and the (K24) CKP Signal circuit through the CKP Sensor.

      Is the resistance between 900 and 1100 Ohms?

      Yes

      - Replace and program the Powertrain Control Module in accordance with the service information.
      - Perform the POWERTRAIN VERIFICATION TEST - 6.7L. Refer to **POWERTRAIN VERIFICATION TEST - 6.7L** .

      No

      - Replace the CKP Sensor in accordance with the service information.
      - Perform the POWERTRAIN VERIFICATION TEST - 6.7L. Refer to **POWERTRAIN VERIFICATION TEST - 6.7L** .

P0336-CRANKSHAFT POSITION SENSOR PERFORMANCE

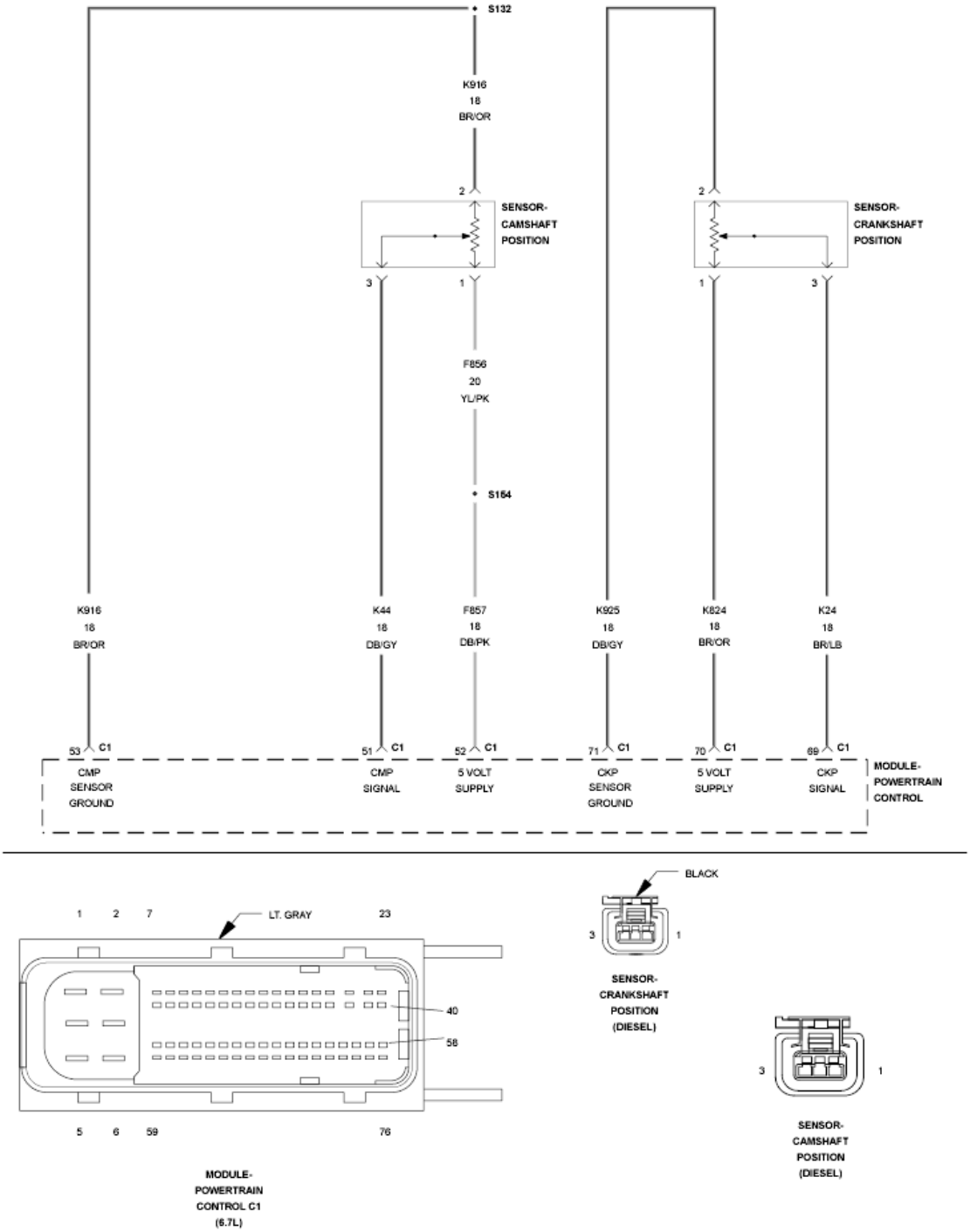

Fig. 121: Crankshaft Position Sensor & Camshaft Position Sensor Circuit Schematic
Courtesy of CHRYSLER GROUP, LLC

For a complete wiring diagram, **refer to appropriate SYSTEM WIRING DIAGRAMS article** .

THEORY OF OPERATION

The Powertrain Control Module (PCM) provides a 5-Volt supply to the Crankshaft Position Sensor (CKP) on

the sensor supply circuit. The PCM also provides a ground on the sensor return circuit. The Crankshaft Position Sensor provides a signal to the PCM on the Crankshaft Position Sensor Signal circuit. The CKP Sensor generates a signal to the PCM as a notch in the crank pulley travels by the sensor. The PCM uses this signal to determine engine speed and engine position. The PCM illuminates the MIL lamp immediately after the diagnostic runs and fails. During this time the Camshaft Position Sensor is used to provide engine speed and position information to the PCM. The customer may experience an engine misfire as control switches from the primary to the backup speed sensor. The PCM will turn off the MIL lamp when the diagnostic runs and passes in four consecutive drive cycles.

WHEN MONITORED:

With the key on.

SET CONDITION:

The voltage detected at the Crankshaft Position Sensor is below a calibrated value.

POSSIBLE CAUSES

Possible Causes
(K24) SIGNAL CIRCUIT OPEN/HIGH RESISTANCE
(K824) 5-VOLT SUPPLY CIRCUIT OPEN/HIGH RESISTANCE
(K925) RETURN CIRCUIT OPEN/HIGH RESISTANCE
(K24) SIGNAL CIRCUIT SHORTED TO THE (K925) RETURN CIRCUIT
(K824) 5-VOLT SUPPLY CIRCUIT SHORTED TO THE (K925) RETURN CIRCUIT
(K24) SIGNAL CIRCUIT SHORTED TO THE (K824) 5-VOLT SUPPLY CIRCUIT
(K24) SIGNAL CIRCUIT SHORTED TO GROUND
CRANKSHAFT POSITION SENSOR
POWERTRAIN CONTROL MODULE (PCM)

Always perform the Pre-Diagnostic Troubleshooting procedure before proceeding. Refer to PRE-DIAGNOSTIC TROUBLESHOOTING PROCEDURE - 6.7L .

DIAGNOSTIC TEST

1. **ACTIVE DTC**

NOTE: **If there are any 5-Volt supply DTCs present, repair those DTCs before proceeding.**

1. Turn the ignition on.
2. With the scan tool, record all Freeze frame data.
3. With the scan tool, erase DTCs.
4. Turn the ignition off for 75 seconds.
5. Start, or attempt to start the engine.

6. With the scan tool, read DTCs.

   Did the DTC reset?

   Yes

   - Go To 2.

   No

   - Perform the INTERMITTENT CONDITION - 6.7L diagnostic procedure. Refer to **INTERMITTENT CONDITION - 6.7L** .

2. **CHECK THE (K24) SIGNAL CIRCUIT FOR AN OPEN/HIGH RESISTANCE**

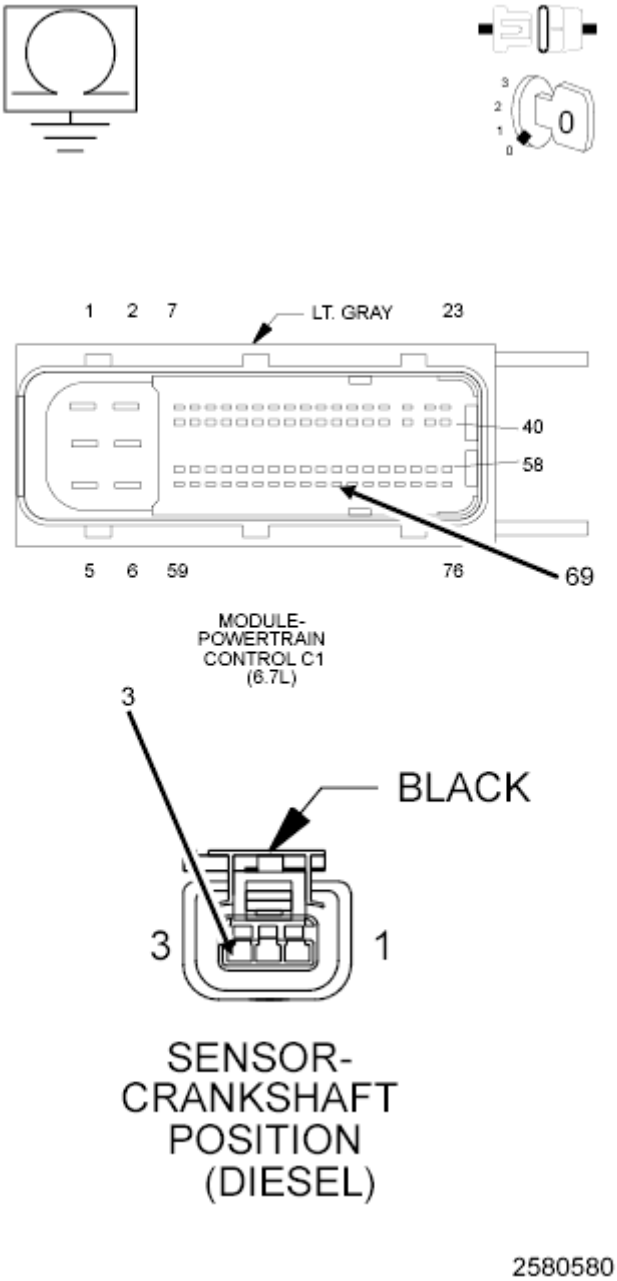

Fig. 122: Checking CKP Signal Circuit For Open Or High Resistance
Courtesy of CHRYSLER GROUP, LLC

1. Turn the ignition off.
2. Disconnect the PCM C1 harness connector.
3. Disconnect the CKP Sensor harness connector.

NOTE: Check connectors - Clean/repair as necessary.

4. Measure the resistance of the (K24) CKP Signal circuit between the PCM C1 harness connector

and the CKP Sensor harness connector.

Is the resistance below 5.0 Ohms?

Yes

- Go To 3.

No

- Repair the (K24) CKP Signal circuit for an open or high resistance.
- Perform the POWERTRAIN VERIFICATION TEST - 6.7L. Refer to **POWERTRAIN VERIFICATION TEST - 6.7L** .

3. **CHECK THE (K824) 5-VOLT SUPPLY CIRCUIT FOR AN OPEN/HIGH RESISTANCE**

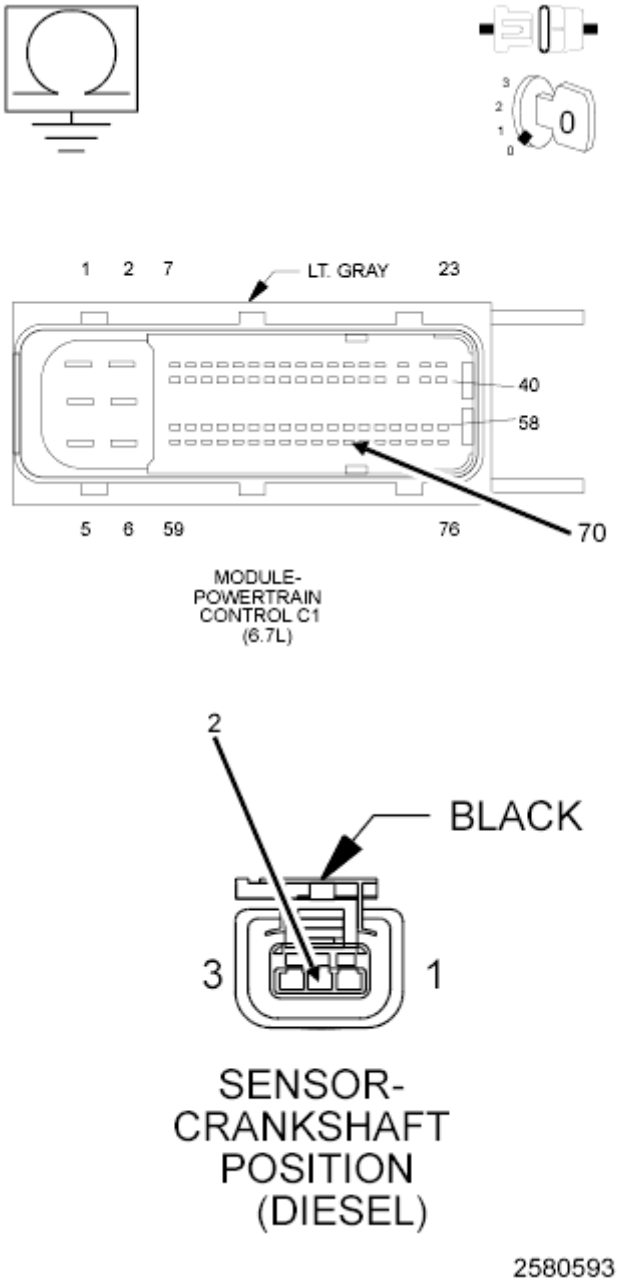

Fig. 123: Checking CKP 5-Volt Supply Circuit For An Open Or High Resistance
Courtesy of CHRYSLER GROUP, LLC

1. Measure the resistance of the (K824) 5-Volt Supply circuit between the PCM C1 harness connector and the CKP Sensor harness connector.

   Is the resistance below 5.0 Ohms?

   Yes

   - Go To 4.

No

- Repair the (K824) 5-Volt Supply circuit for an open or high resistance.
- Perform the POWERTRAIN VERIFICATION TEST - 6.7L. Refer to **POWERTRAIN VERIFICATION TEST - 6.7L** .

4. **CHECK THE (K925) RETURN CIRCUIT FOR AN OPEN/HIGH RESISTANCE**

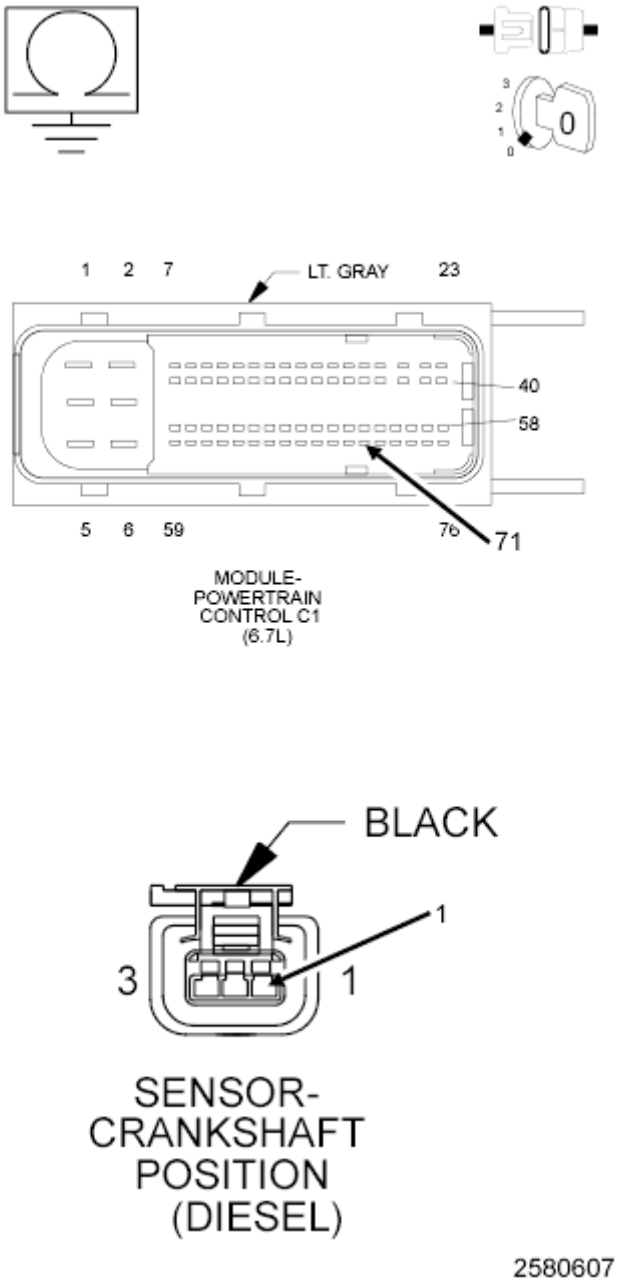

Fig. 124: Checking CKP Return Circuit For An Open Or High Resistance
Courtesy of CHRYSLER GROUP, LLC

1. Measure the resistance of the (K925) CKP Return circuit between the PCM C1 harness connector

and the CKP Sensor harness connector.

Is the resistance below 5.0 Ohms?

Yes

- Go To 5.

No

- Repair the (K925) CKP Return circuit for an open or high resistance.
- Perform the POWERTRAIN VERIFICATION TEST - 6.7L. Refer to **POWERTRAIN VERIFICATION TEST - 6.7L** .

5. **CHECK FOR THE (K24) SIGNAL CIRCUIT SHORTED TO THE (K925) RETURN CIRCUIT**

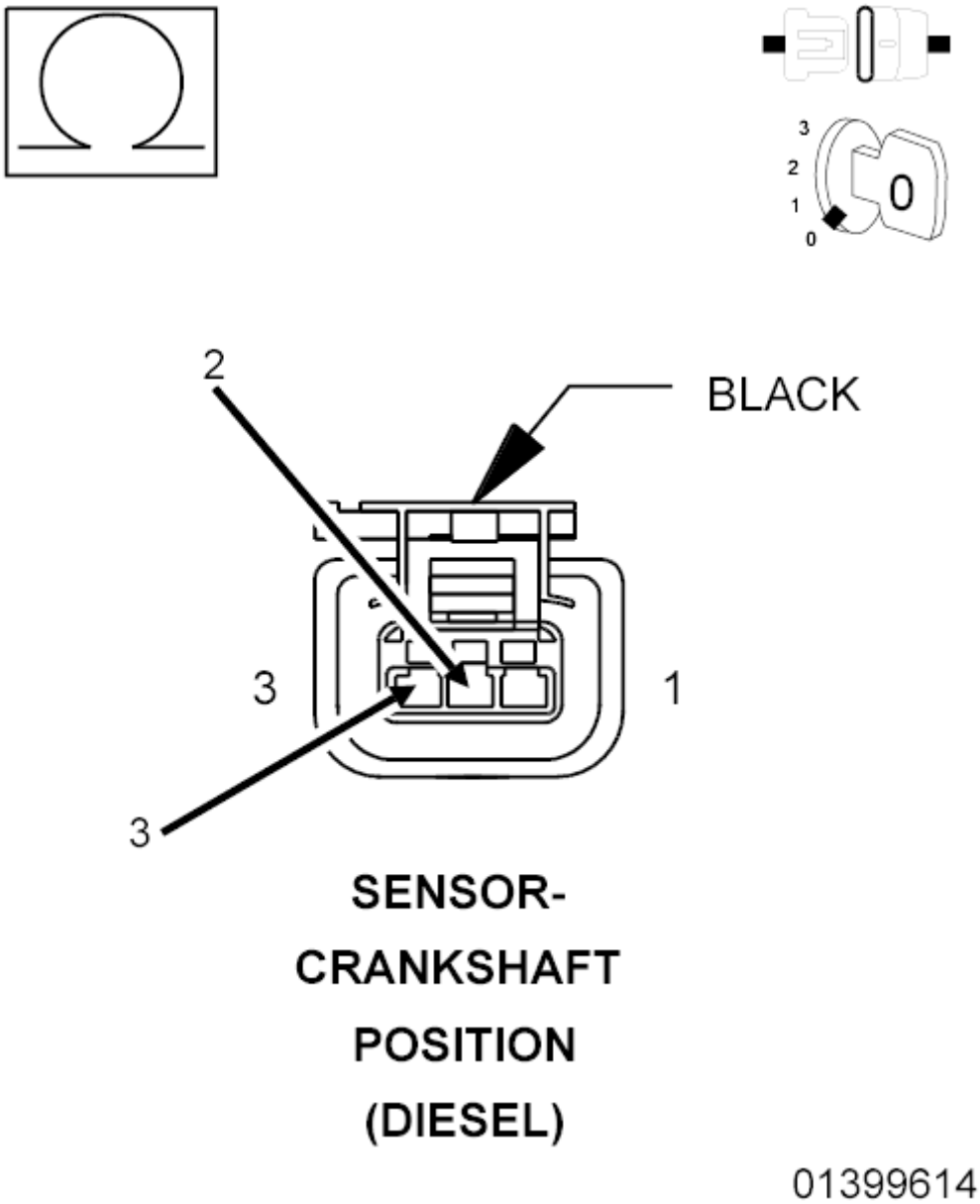

Fig. 125: Checking Signal Circuit For Short To Return Circuit
Courtesy of CHRYSLER GROUP, LLC

1. Measure the resistance between the (K24) CKP Signal circuit and the (K925) CKP Return circuit at the CKP Sensor harness connector.

   Is the resistance below 10k Ohms?

   Yes

   - Repair the short between the (K24) CKP Signal circuit and the (K925) CKP Return circuit.
   - Perform the POWERTRAIN VERIFICATION TEST - 6.7L. Refer to **POWERTRAIN VERIFICATION TEST - 6.7L** .

No

- Go To 6.

6. **CHECK FOR THE (K24) SIGNAL CIRCUIT SHORTED TO THE (K824) 5-VOLT SUPPLY CIRCUIT**

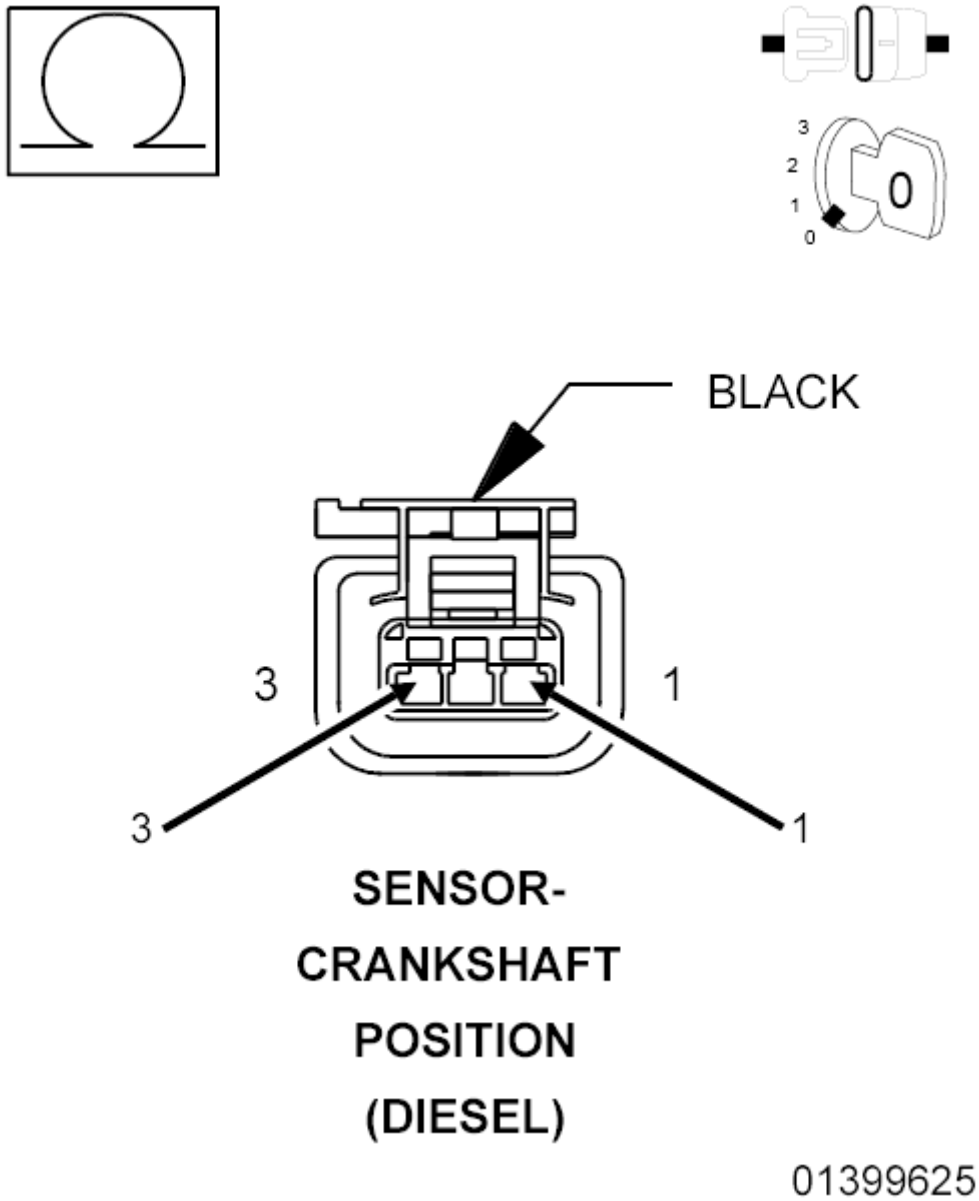

Fig. 126: Checking Signal Circuit For Short To 5-Volt Supply Circuit
Courtesy of CHRYSLER GROUP, LLC

1. Measure the resistance between the (K24) CKP Signal circuit and the (K824) 5-Volt Supply circuit in the CKP Sensor harness connector.

   Is the resistance below 10k Ohms?

Yes

- Repair the short between the (K24) CKP Signal circuit and the (K824) 5-Volt Supply circuit.
- Perform the POWERTRAIN VERIFICATION TEST - 6.7L. Refer to **POWERTRAIN VERIFICATION TEST - 6.7L** .

No

- Go To 7.

7. **CHECK THE (K24) SIGNAL CIRCUIT FOR A SHORT GROUND**

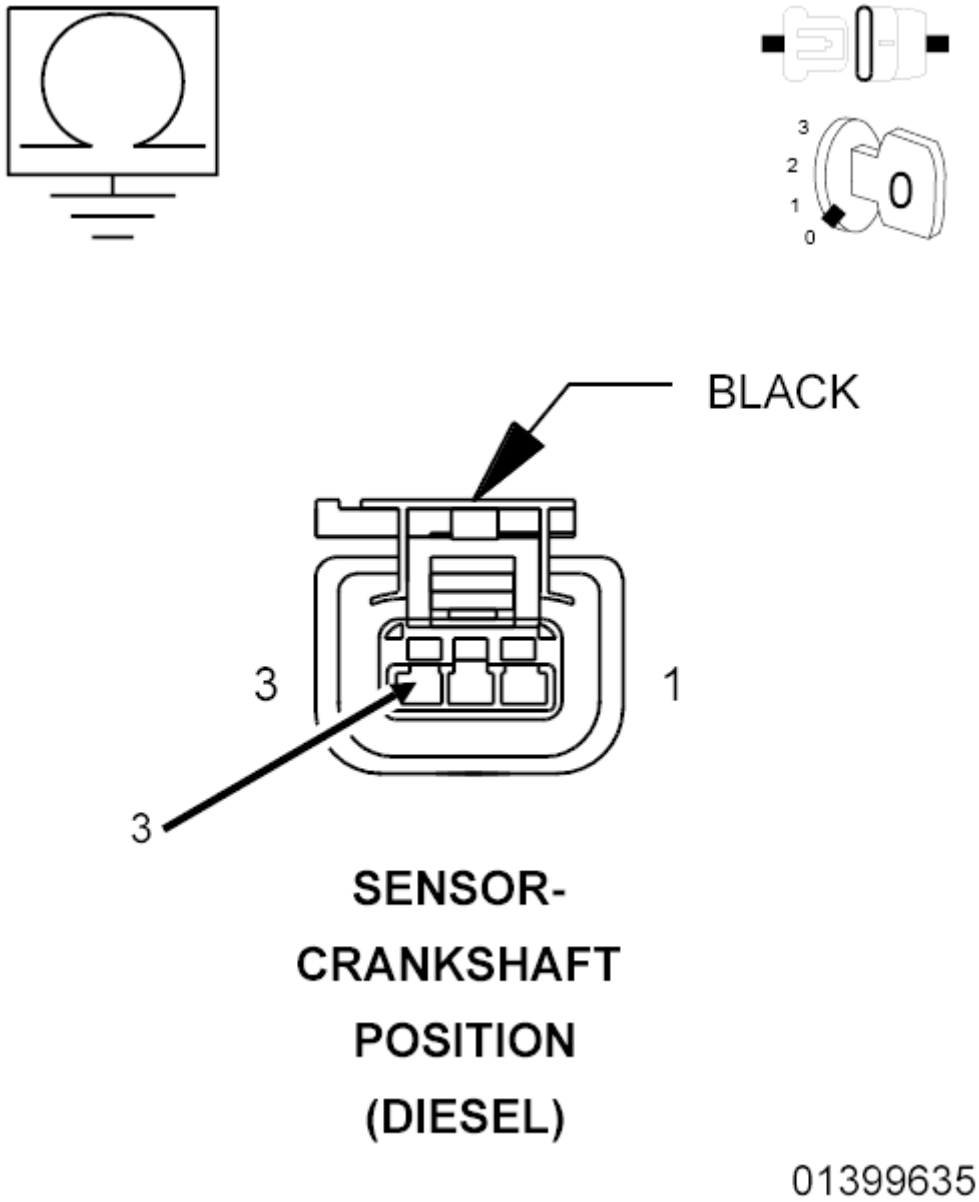

Fig. 127: Checking CKP Signal Circuit For Short To Ground
Courtesy of CHRYSLER GROUP, LLC

1. Measure the resistance between ground and the (K24) CKP Signal circuit at the CKP Sensor harness connector.

   Is the resistance below 10k Ohms?

   Yes

   - Repair the (K24) CKP Signal circuit for a short to ground.
   - Perform the POWERTRAIN VERIFICATION TEST - 6.7L. Refer to **POWERTRAIN VERIFICATION TEST - 6.7L** .

   No

   - Go To 8.

8. **CHECK THE CRANKSHAFT POSITION SENSOR**
   1. Measure the resistance between the (K824) 5-Volt Supply circuit and the (K24) CKP Signal circuit through the CKP Sensor.

      Is the resistance between 900 and 1100 Ohms?

      Yes

      - Replace and program the Powertrain Control Module in accordance with the service information.
      - Perform the POWERTRAIN VERIFICATION TEST - 6.7L. Refer to **POWERTRAIN VERIFICATION TEST - 6.7L** .

      No

      - Replace the Crank Position Sensor in accordance with the service information.
      - Perform the POWERTRAIN VERIFICATION TEST - 6.7L. Refer to **POWERTRAIN VERIFICATION TEST - 6.7L** .

P0340-CAMSHAFT POSITION SENSOR CIRCUIT - BANK 1 SENSOR 1

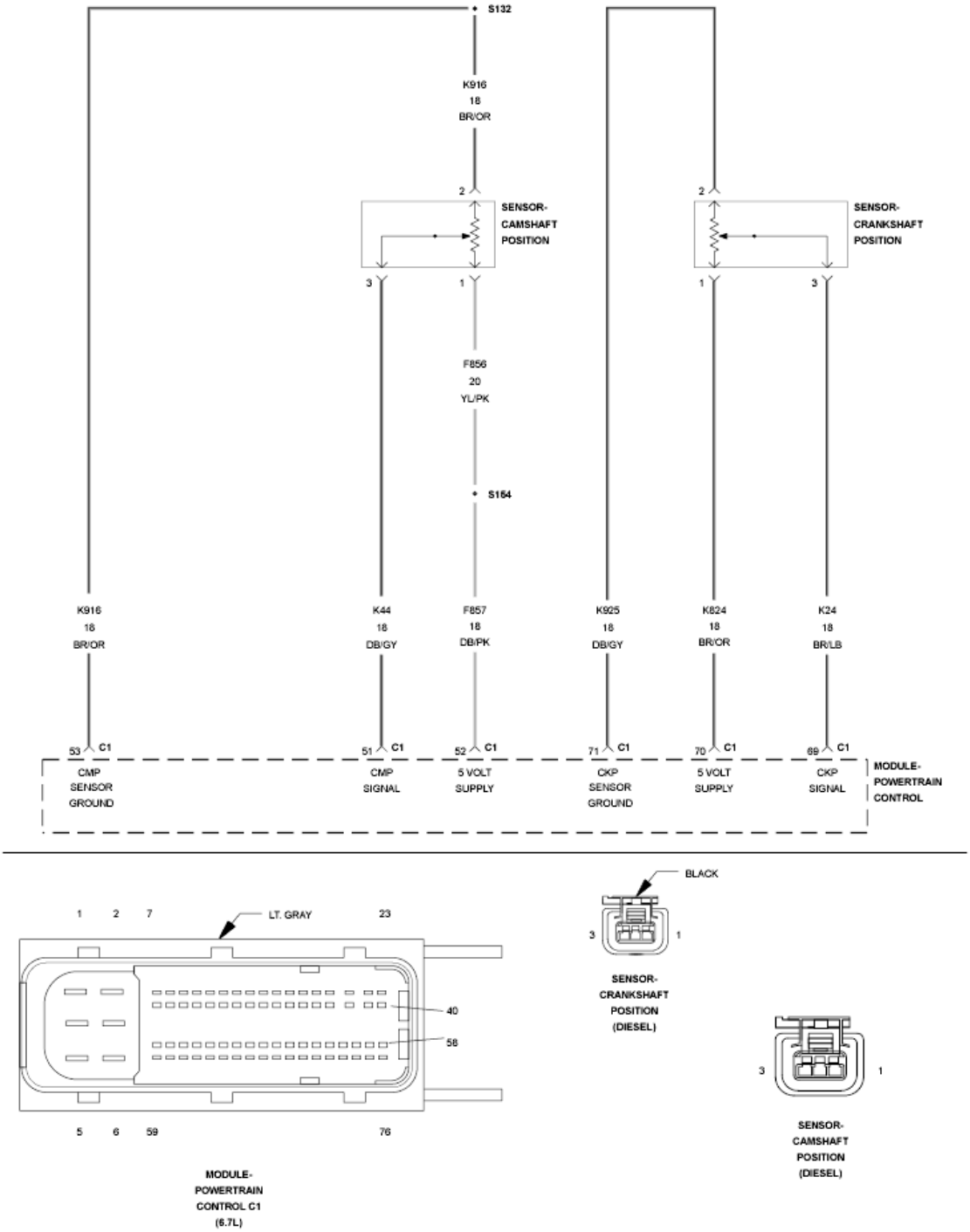

Fig. 128: Crankshaft Position Sensor & Camshaft Position Sensor Circuit Schematic
Courtesy of CHRYSLER GROUP, LLC

For a complete wiring diagram, **refer to appropriate SYSTEM WIRING DIAGRAMS article** .

THEORY OF OPERATION

The Powertrain Control Module (PCM) provides a 5-Volt supply to the engine Camshaft Position Sensor

(CMP) on the sensor supply circuit. The PCM also provides a ground on the sensor return circuit. The Camshaft Position Sensor provides a signal to the PCM on the sensor signal circuit. The CMP Sensor generates a signal to the PCM as the camshaft speed indicator lobe moves past the sensor. The PCM interprets this signal into an engine speed reading and determines engine position. This sensor is used as a backup sensor if the primary Crankshaft Position Sensor Signal is lost. The PCM illuminates the MIL lamp immediately after the diagnostic runs and fails. During the time the customer may experience a hard start/no start condition. The PCM will turn off the MIL lamp after the diagnostic runs and passes in four consecutive drive cycles.

WHEN MONITORED:

While the engine is running.

SET CONDITION:

The Powertrain Control Module (PCM) no longer detects a signal from the Camshaft Position Sensor.

POSSIBLE CAUSES

Possible Causes
(F857) 5-VOLT SUPPLY CIRCUIT OPEN/HIGH RESISTANCE
(K916) SENSOR RETURN CIRCUIT OPEN/HIGH RESISTANCE
(K44) CMP SIGNAL CIRCUIT SHORTED TO GROUND
(K44) CMP SIGNAL CIRCUIT SHORTED TO SUPPLY (F857) CIRCUIT
(K44) CMP SIGNAL CIRCUIT SHORTED TO (K916) RETURN CIRCUIT
(K44) CMP SIGNAL CIRCUIT SHORTED TO VOLTAGE
FAULTY FUEL INJECTOR
CAMSHAFT POSITION SENSOR
POWERTRAIN CONTROL MODULE (PCM)

Always perform the Pre-Diagnostic Troubleshooting procedure before proceeding. Refer to PRE-DIAGNOSTIC TROUBLESHOOTING PROCEDURE - 6.7L .

DIAGNOSTIC TEST

1. **ACTIVE DTC**

NOTE: **A faulty fuel injector can cause an erroneous CKP or CMP DTC to set. If there are any fuel injector related DTCs present, repair those DTCs before proceeding.**

NOTE: **If there are any 5-Volt supply DTCs present, repair those DTCs before proceeding.**

1. Turn the ignition on.
2. With the scan tool, record all Freeze frame data.

3. With the scan tool, erase DTCs.
4. Turn the ignition off for 75 seconds.
5. Start, or attempt to start the engine.
6. With the scan tool, read DTCs.

   Did the DTC reset?

   Yes

   - Go To 2.

   No

   - Perform the INTERMITTENT CONDITION - 6.7L diagnostic procedure. Refer to **INTERMITTENT CONDITION - 6.7L** .

2. **CHECK THE CAMSHAFT SENSOR**
   1. Turn the ignition off.
   2. Disconnect the CMP Sensor harness connector.

      NOTE: Check connectors - Clean/repair as necessary.

   3. Measure the resistance between the (F857) 5-Volt supply circuit and the (K44) CMP Signal circuit of the CMP sensor.

      Is the resistance between 900 and 1100 Ohms?

      Yes

      - Go To 3.

      No

      - Replace the Camshaft Position Sensor in accordance with the service information.
      - Perform the POWERTRAIN VERIFICATION TEST - 6.7L. Refer to **POWERTRAIN VERIFICATION TEST - 6.7L** .

3. **CHECK THE (F857) 5-VOLT SUPPLY CIRCUIT FOR AN OPEN/HIGH RESISTANCE**

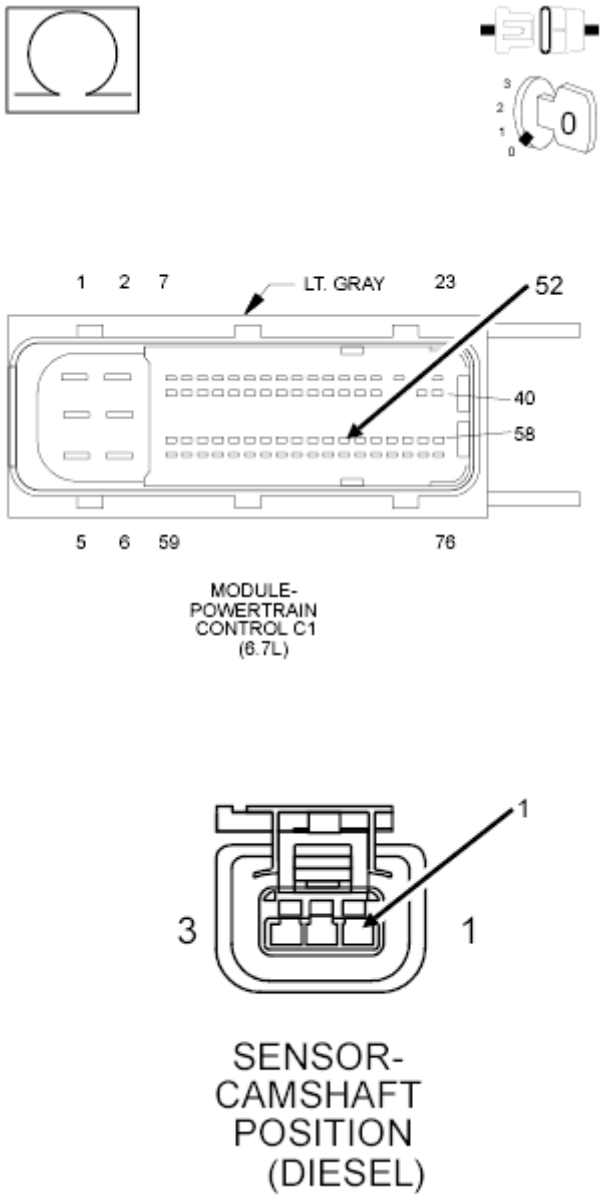

Fig. 129: Checking CMP 5-Volt Supply Circuit For Open Or High Resistance
Courtesy of CHRYSLER GROUP, LLC

1. Disconnect the PCM C1 harness connector.

   NOTE: Check connectors - Clean/repair as necessary.

2. Measure the resistance of the (F857) 5-Volt Supply circuit between the PCM C1 harness connector and the CMP Sensor harness connector.

   Is the resistance below 5.0 Ohms?

Yes

- Go To 4.

No

- Repair the (F857) 5-Volt Supply circuit for an open or high resistance.
- Perform the POWERTRAIN VERIFICATION TEST - 6.7L. Refer to **POWERTRAIN VERIFICATION TEST - 6.7L** .

4. **CHECK THE (K916) RETURN CIRCUIT FOR AN OPEN/HIGH RESISTANCE**

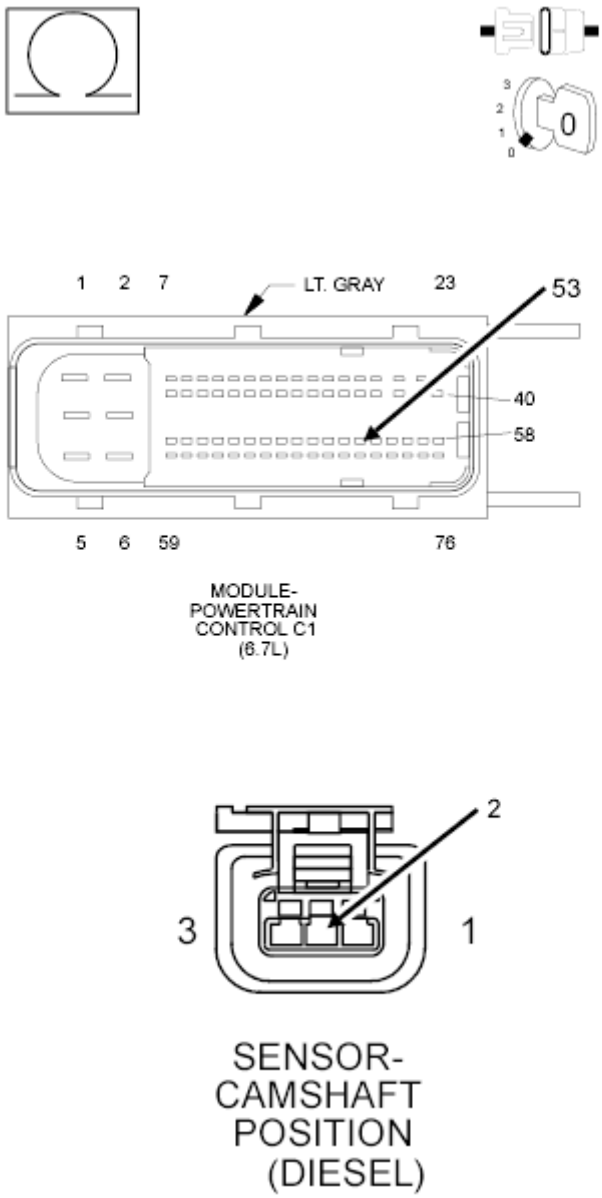

Fig. 130: Checking CMP Return Circuit For Open Or High Resistance

1. Measure the resistance of the (K916) Sensor Return circuit between the PCM C1 harness connector and the CMP Sensor harness connector.

   Is the resistance below 5.0 Ohms?

   Yes

   - Go To 5.

   No

   - Repair the (K916) Sensor Return circuit for an open or high resistance.
   - Perform the POWERTRAIN VERIFICATION TEST - 6.7L. Refer to **POWERTRAIN VERIFICATION TEST - 6.7L** .

5. **CHECK THE (K44) SIGNAL CIRCUIT FOR A SHORT TO GROUND**

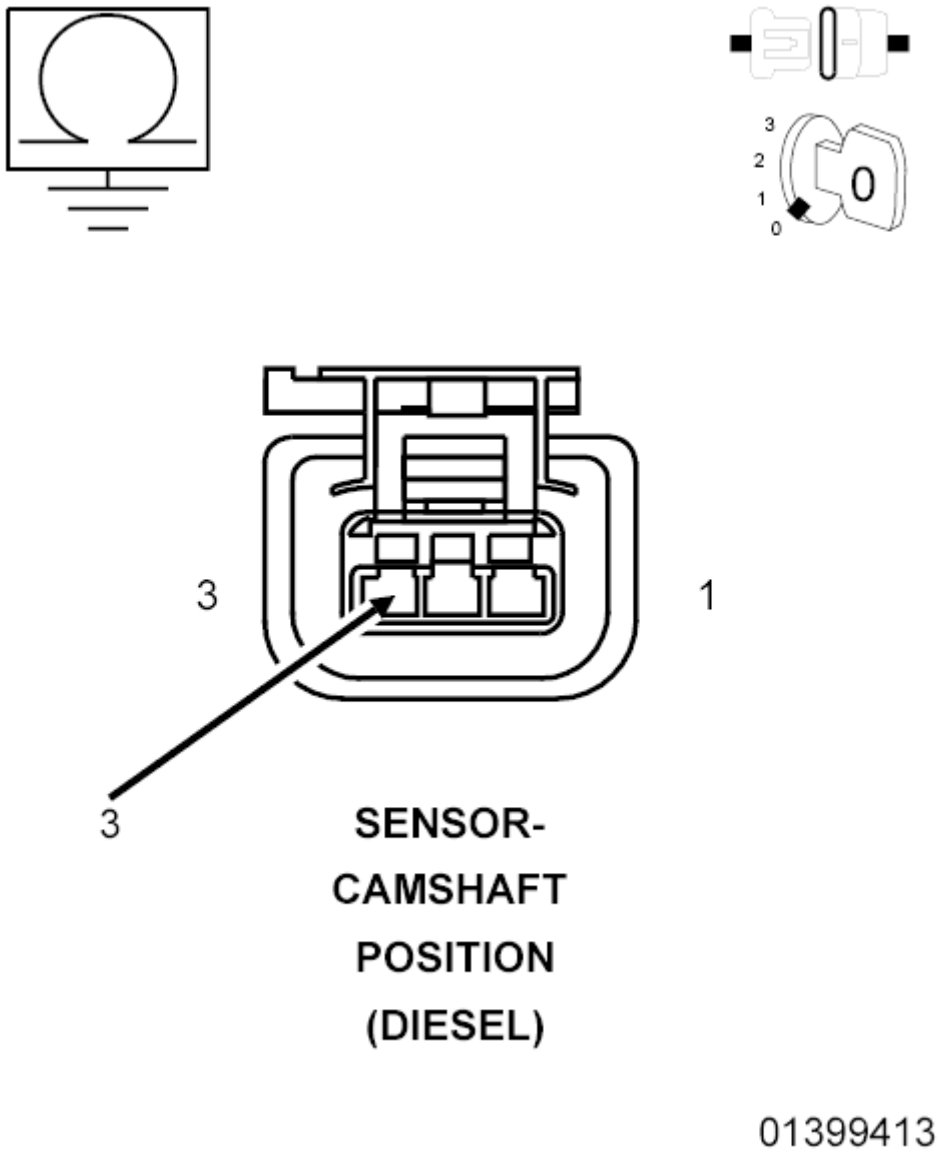

Fig. 131: Checking CMP Signal Circuit For Short To Ground
Courtesy of CHRYSLER GROUP, LLC

1. Measure the resistance between ground and the (K44) CMP Signal circuit in the CMP Sensor harness connector.

   Is the resistance below 10k Ohms?

   Yes

   - Repair the (K44) CMP Signal circuit for a short to ground.
   - Perform the POWERTRAIN VERIFICATION TEST - 6.7L. Refer to **POWERTRAIN VERIFICATION TEST - 6.7L** .

No

- Go To 6.

6. **CHECK FOR THE (K44) SIGNAL CIRCUIT SHORTED TO THE (F857) 5-VOLT SUPPLY CIRCUIT**

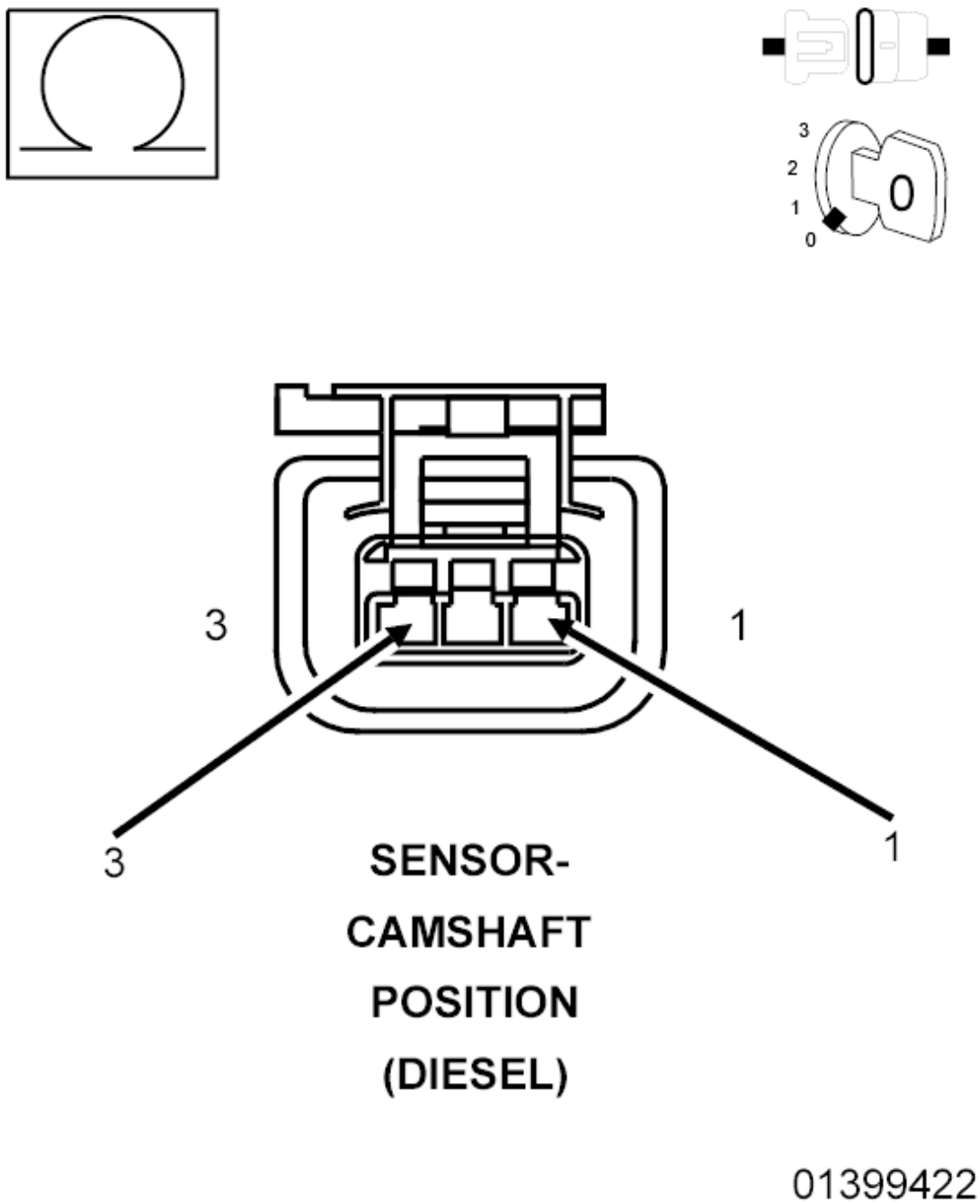

Fig. 132: Checking Signal Circuit For Short To 5-Volt Supply Circuit
Courtesy of CHRYSLER GROUP, LLC

1. Measure the resistance between the (K44) CMP Signal circuit and the (F857) 5-Volt Supply circuit in the CMP Sensor harness connector.

   Is the resistance below 10k Ohms?

   Yes

   - Repair the short between the (K44) CMP Sensor circuit and the (F857) 5-Volt supply circuit.
   - Perform the POWERTRAIN VERIFICATION TEST - 6.7L. Refer to **POWERTRAIN VERIFICATION TEST - 6.7L** .

   No

   - Go To 7.

7. **CHECK FOR THE (K44) SIGNAL CIRCUIT SHORTED TO THE (K916) RETURN CIRCUIT**

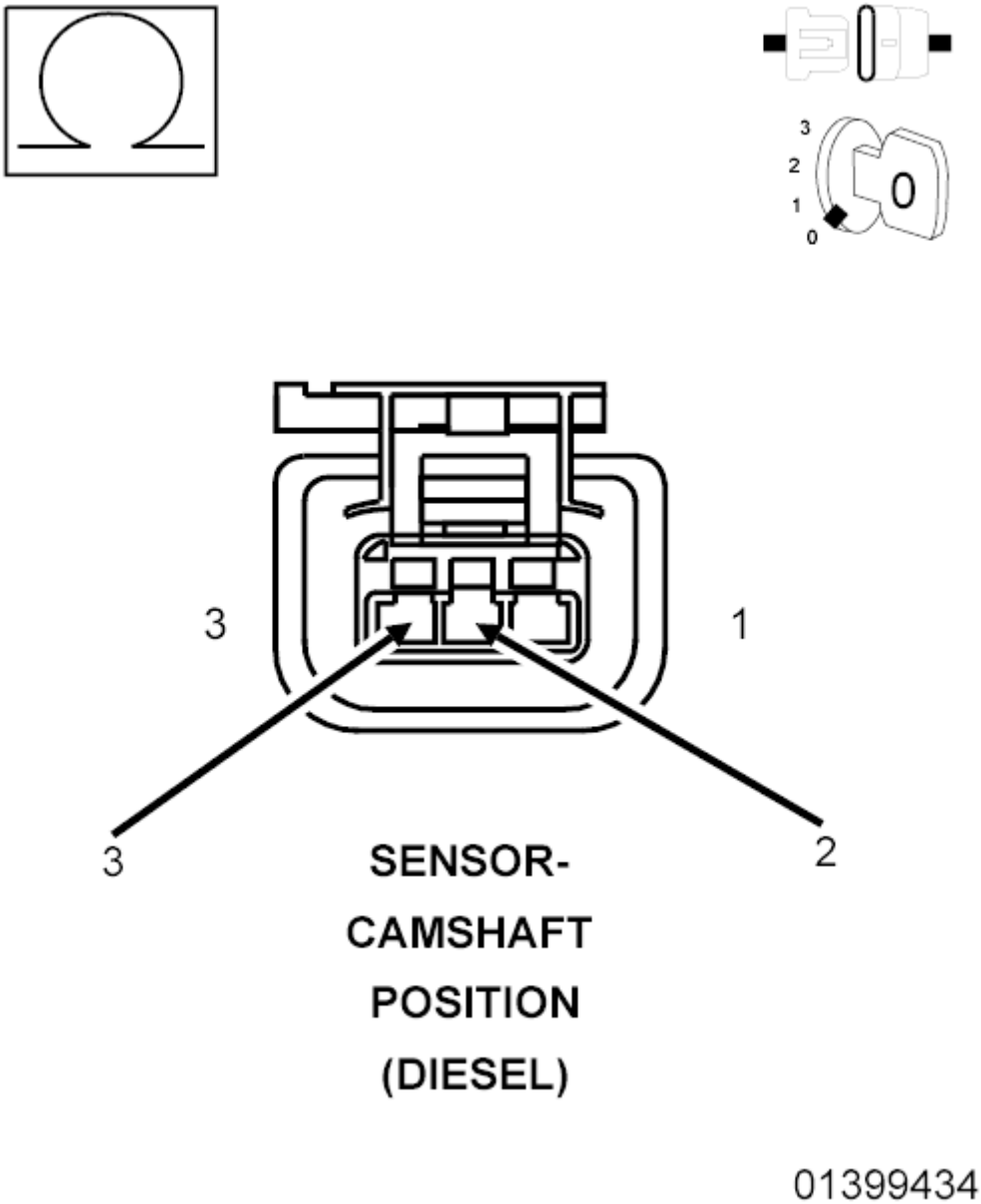

Fig. 133: Checking Signal Circuit For Short To Return Circuit
Courtesy of CHRYSLER GROUP, LLC

1. Measure the resistance between the (K44) CMP Signal circuit and the (K916) Sensor Return circuit in the CMP Sensor harness connector.

   Is the resistance below 10k Ohms?

   Yes

   - Repair the short between the (K44) CMP Signal circuit and the (K916) Sensor Return circuit.
   - Perform the POWERTRAIN VERIFICATION TEST - 6.7L. Refer to **POWERTRAIN**

VERIFICATION TEST - 6.7L .

No

- Go To 8.

8. **CHECK THE (K44) SIGNAL CIRCUIT FOR A SHORT TO VOLTAGE**

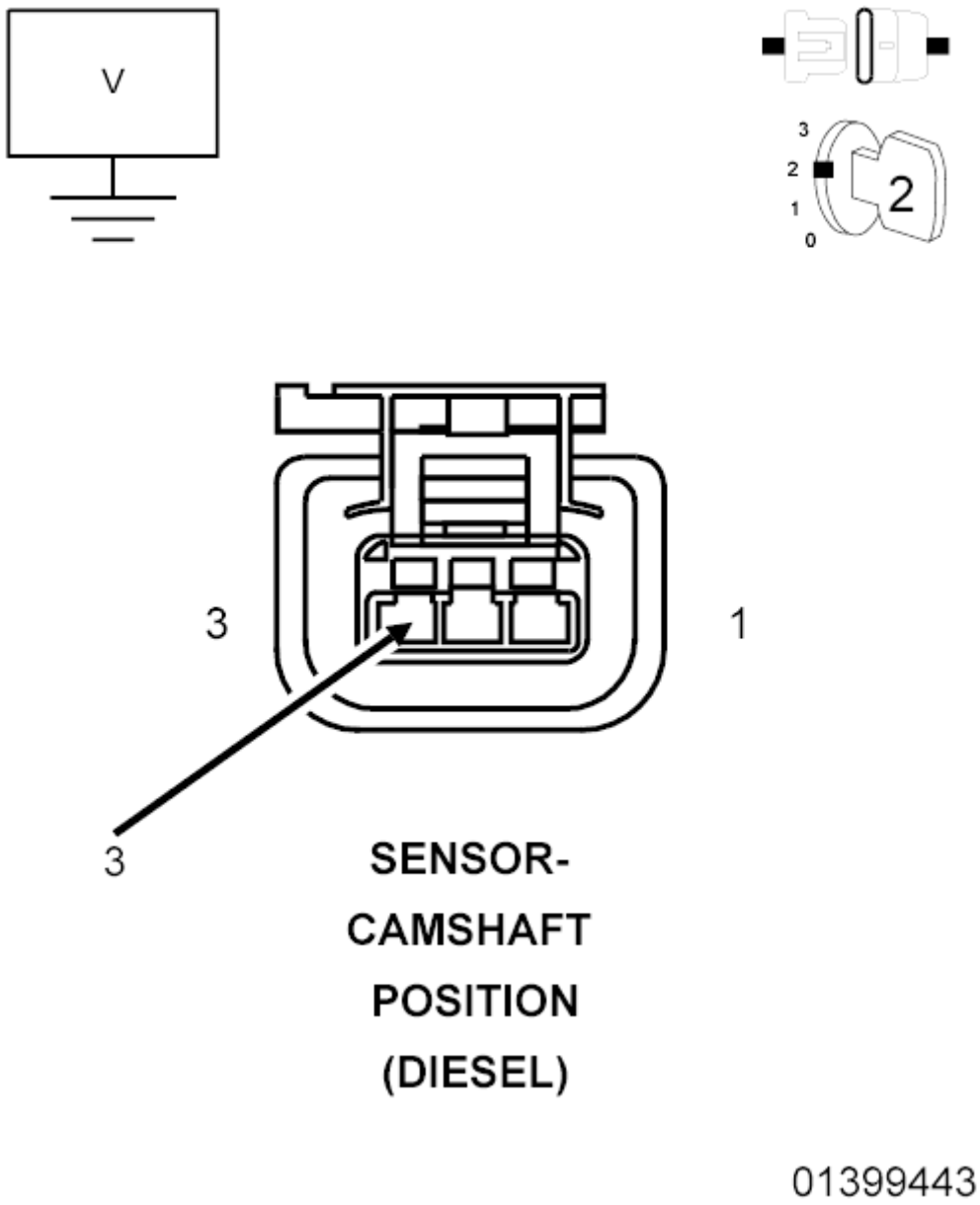

Fig. 134: Checking Signal Circuit For Short To Voltage
Courtesy of CHRYSLER GROUP, LLC

1. Turn the ignition on.
2. Measure the voltage on the (K44) CMP Signal circuit at the CMP sensor harness connector.

Is there any voltage present?

Yes

- Repair (K44) CMP Signal circuit for a short to voltage.
- Perform the POWERTRAIN VERIFICATION TEST - 6.7L. Refer to **POWERTRAIN VERIFICATION TEST - 6.7L** .

No

- Go To 9.

9. **CHECK THE POWERTRAIN CONTROL MODULE**

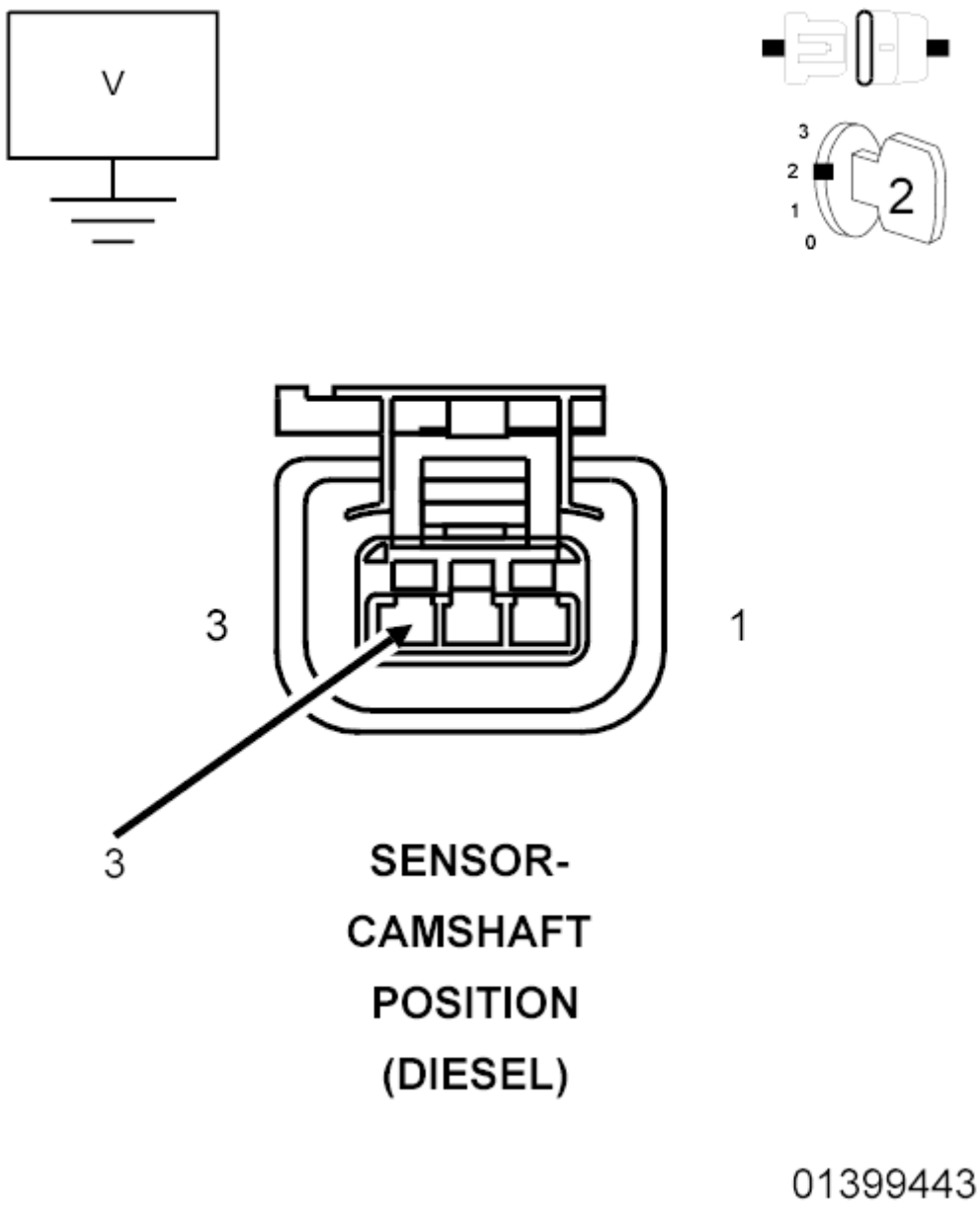

Fig. 135: Checking Signal Circuit For Short To Voltage
Courtesy of CHRYSLER GROUP, LLC

1. Reconnect the PCM C1 harness connector.
2. Measure the voltage of the (K44) CMP Signal circuit at the CMP sensor harness connector.

   Is the voltage reading below 1.0 Volt?

   Yes

   - Perform the INTERMITTENT CONDITION - 6.7L diagnostic procedure. Refer to **INTERMITTENT CONDITION - 6.7L** .

No

- Replace and program the Powertrain Control Module in accordance with the service information.
- Perform the POWERTRAIN VERIFICATION TEST - 6.7L. Refer to **POWERTRAIN VERIFICATION TEST - 6.7L** .

P0341-CAMSHAFT POSITION SENSOR PERFORMANCE - BANK 1 SENSOR 1

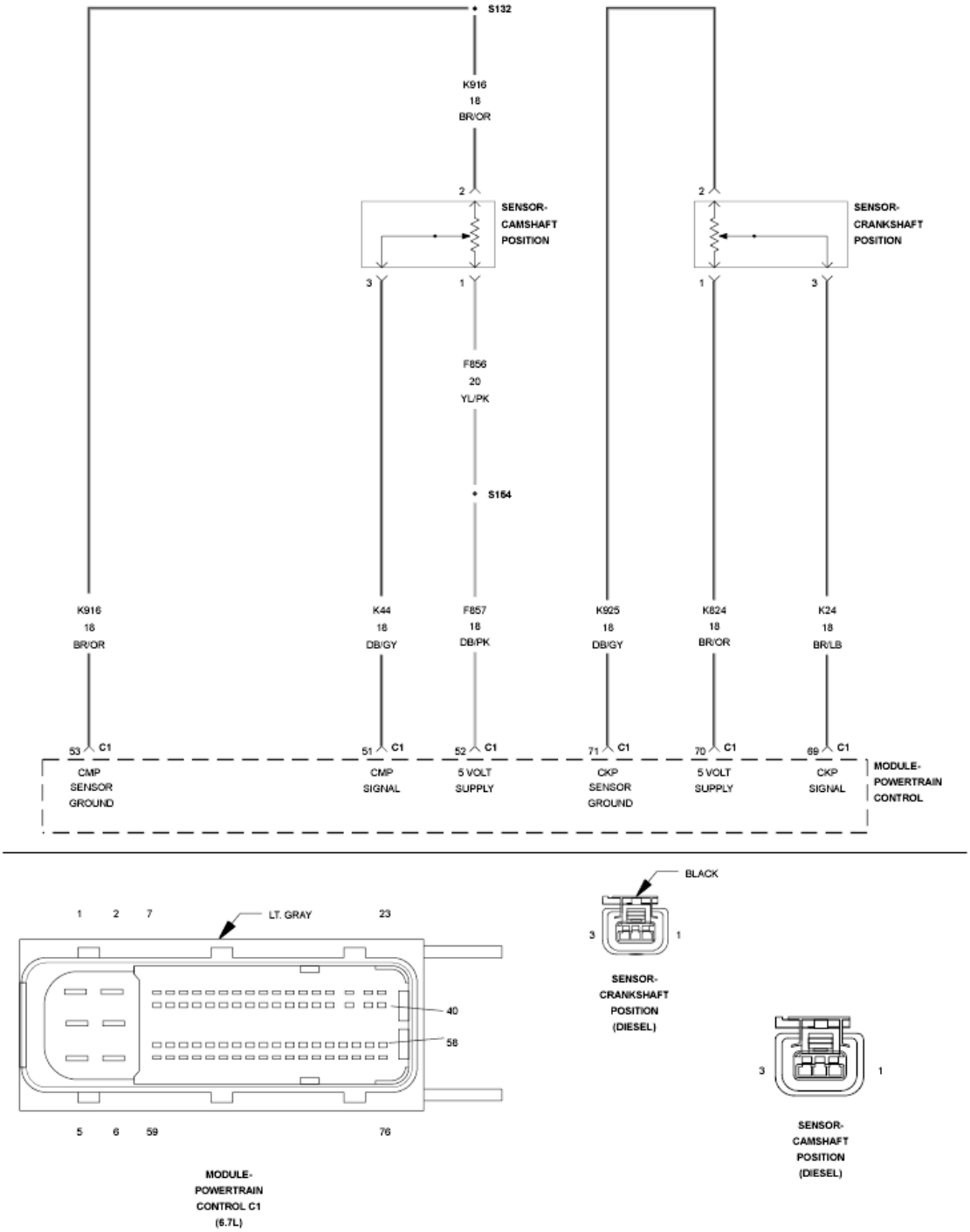

Fig. 136: Crankshaft Position Sensor & Camshaft Position Sensor Circuit Schematic
Courtesy of CHRYSLER GROUP, LLC

For a complete wiring diagram, **refer to appropriate SYSTEM WIRING DIAGRAMS article** .

THEORY OF OPERATION

The Powertrain Control Module (PCM) provides a 5-Volt supply to the engine Camshaft Position Sensor

(CMP) on the sensor supply circuit. The PCM also provides a ground on the sensor return circuit. The Camshaft Position Sensor provides a signal to the PCM on the sensor signal circuit. The CMP Sensor generates a signal to the PCM as the camshaft speed indicator lobe moves past the sensor. The PCM interprets this signal into an engine speed reading and determines engine position. This sensor is used as a backup sensor if the primary Crankshaft Position Sensor Signal is lost. The PCM illuminates the MIL lamp immediately after the diagnostic runs and fails. During the time the customer may experience a hard start/no start condition. The PCM will turn off the MIL lamp after the diagnostic runs and passes in four consecutive drive cycles.

WHEN MONITORED:

While the engine is running.

SET CONDITION:

The Powertrain Control Module (PCM) no longer detects a signal from the Camshaft Position Sensor.

POSSIBLE CAUSES

Possible Causes
(K44) CMP SIGNAL CIRCUIT OPEN/HIGH RESISTANCE
(F857) 5-VOLT SUPPLY CIRCUIT OPEN/HIGH RESISTANCE
(K916) SENSOR RETURN CIRCUIT OPEN/HIGH RESISTANCE
(K44) CMP SIGNAL CIRCUIT SHORTED TO GROUND
(K44) CMP SIGNAL CIRCUIT SHORTED TO THE (F855) 5-VOLT SUPPLY CIRCUIT
(K44) CMP SIGNAL CIRCUIT SHORTED TO THE (K916) RETURN CIRCUIT
(K44) CMP SIGNAL CIRCUIT SHORTED TO VOLTAGE
FAULTY FUEL INJECTOR
CAMSHAFT POSITION SENSOR
POWERTRAIN CONTROL MODULE (PCM)

Always perform the Pre-Diagnostic Troubleshooting procedure before proceeding. Refer to PRE-DIAGNOSTIC TROUBLESHOOTING PROCEDURE - 6.7L .

DIAGNOSTIC TEST

1. **ACTIVE DTC**

NOTE: **A faulty fuel injector can cause an erroneous CKP or CMP DTC to set. If there are any fuel injector related DTCs present, repair those DTCs before proceeding.**

NOTE: **If there are any 5-Volt supply DTCs present, repair those DTCs before proceeding.**

1. Turn the ignition on.

2. With the scan tool, record all Freeze frame data.
3. With the scan tool, erase DTCs.
4. Turn the ignition off for 75 seconds.
5. Start, or attempt to start the engine.
6. With the scan tool, read DTCs.

   Did the DTC reset?

   Yes

   - Go To 2.

   No

   - Perform the INTERMITTENT CONDITION - 6.7L diagnostic procedure. Refer to **INTERMITTENT CONDITION - 6.7L** .

2. **CHECK THE CAMSHAFT SENSOR**
   1. Turn the ignition off.
   2. Disconnect the CMP Sensor harness connector.

      NOTE: Check connectors - Clean/repair as necessary.

   3. Measure the resistance between the (F857) 5-Volt Supply Circuit and the (K44) CMP Signal Circuit at the CMP Sensor harness connector.

      Is the resistance between 900 and 1100 Ohms?

      Yes

      - Go To 3.

      No

      - Replace the Camshaft Position Sensor in accordance with the service information.
      - Perform the POWERTRAIN VERIFICATION TEST - 6.7L. Refer to **POWERTRAIN VERIFICATION TEST - 6.7L** .

3. **CHECK THE (K44) CMP SIGNAL CIRCUIT FOR AN OPEN/HIGH RESISTANCE**

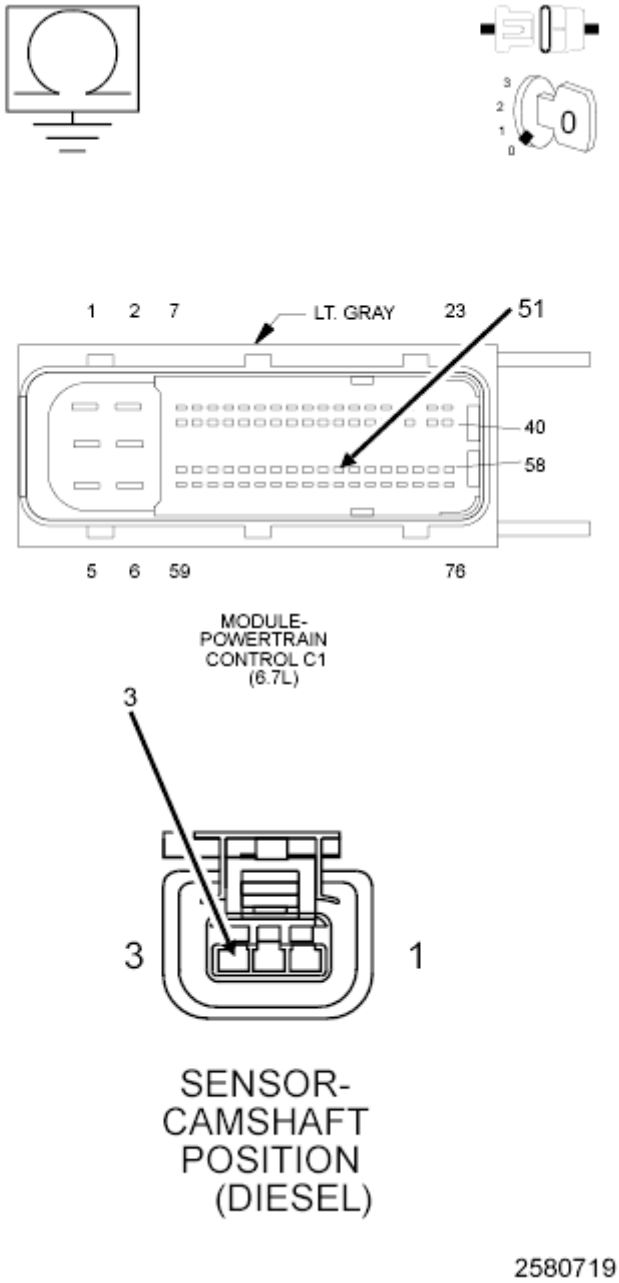

Fig. 137: Checking CMP Signal Circuit For Open Or High Resistance
Courtesy of CHRYSLER GROUP, LLC

1. Disconnect the PCM C1 harness connector.

   NOTE: Check connectors - Clean/repair as necessary.

2. Measure the resistance of the (K44) CMP Signal Circuit between the PCM C1 harness connector and the CMP Sensor harness connector.

   Is the resistance below 5.0 Ohms?

Yes

- Go To 4.

No

- Repair the (K44) CMP Signal circuit for an open or high resistance.
- Perform the POWERTRAIN VERIFICATION TEST - 6.7L. Refer to **POWERTRAIN VERIFICATION TEST - 6.7L** .

4. **CHECK THE (F857) 5-VOLT SUPPLY CIRCUIT FOR AN OPEN/HIGH RESISTANCE**

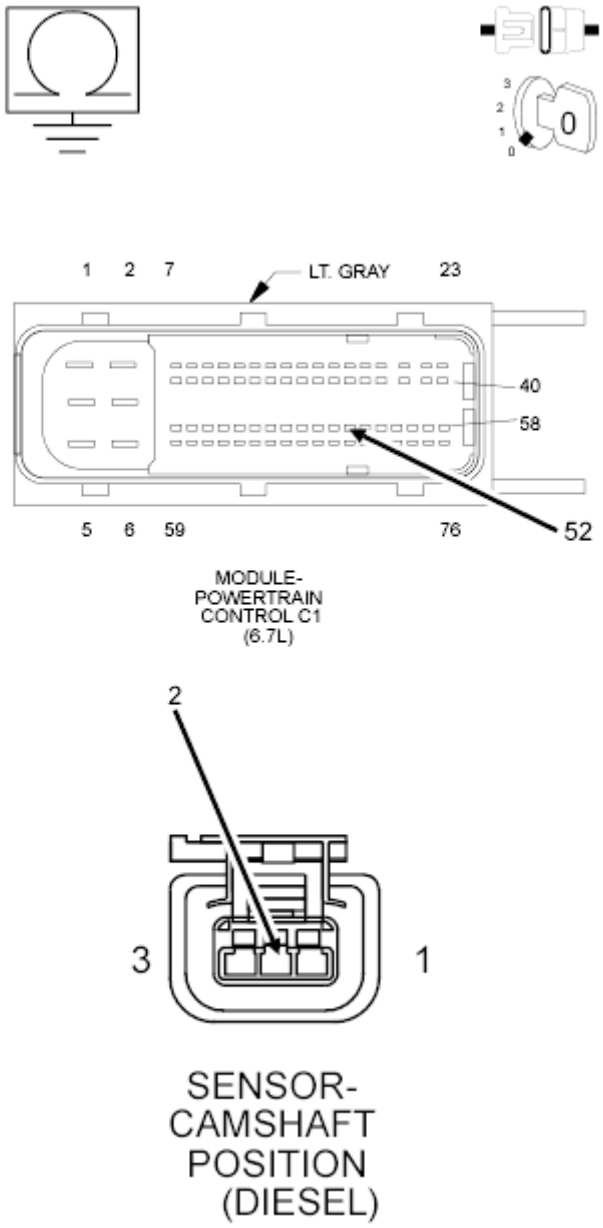

Fig. 138: Checking CMP 5-Volt Supply Circuit For An Open Or High Resistance
Courtesy of CHRYSLER GROUP, LLC

1. Measure the resistance of the (F857) 5-Volt Supply circuit between the PCM C1 harness connector and the CMP Sensor harness connector.

   Is the resistance below 5.0 Ohms?

   Yes

   - Go To 5.

   No

   - Repair the (F857) 5-Volt Supply circuit for an open or high resistance.
   - Perform the POWERTRAIN VERIFICATION TEST - 6.7L. Refer to **POWERTRAIN VERIFICATION TEST - 6.7L** .

5. **CHECK THE (K916) RETURN CIRCUIT FOR AN OPEN/HIGH RESISTANCE**

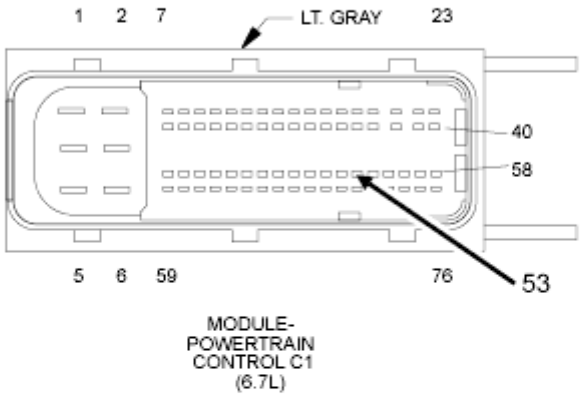

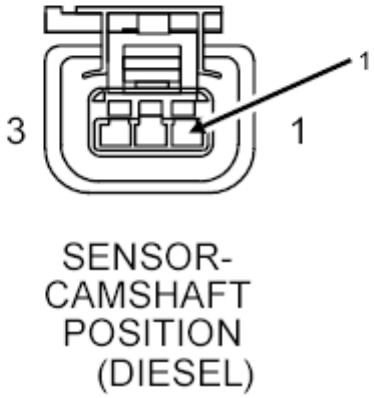

Fig. 139: Checking CMP Return Circuit For An Open Or High Resistance
Courtesy of CHRYSLER GROUP, LLC

1. Measure the resistance of the (K916) Sensor Return circuit between the PCM C1 harness connector and the CMP Sensor harness connector.

   Is the resistance below 5.0 Ohms?

   Yes

   - Go To 6.

   No

- Repair the (K916) Sensor Return circuit for an open or high resistance.
- Perform the POWERTRAIN VERIFICATION TEST - 6.7L. Refer to **POWERTRAIN VERIFICATION TEST - 6.7L** .

6. **CHECK THE (K44) SIGNAL CIRCUIT FOR A SHORT TO GROUND**

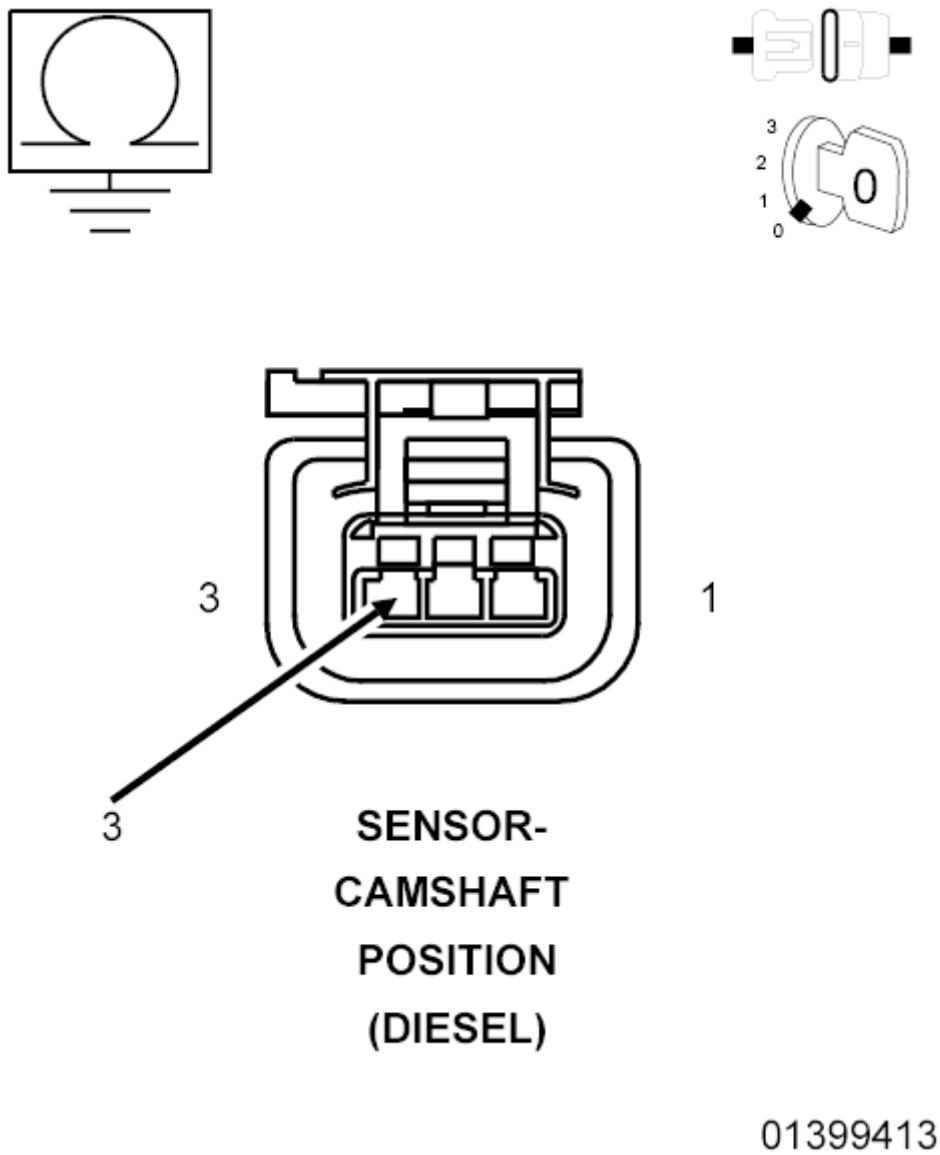

Fig. 140: Checking CMP Signal Circuit For Short To Ground
Courtesy of CHRYSLER GROUP, LLC

1. Measure the resistance between ground and the (K44) CMP Signal circuit at the CMP Sensor harness connector.

   Is the resistance below 10k Ohms?

Yes

- Repair the (K44) CMP Signal circuit for a short to ground.
- Perform the POWERTRAIN VERIFICATION TEST - 6.7L. Refer to **POWERTRAIN VERIFICATION TEST - 6.7L** .

No

- Go To 7.

7. **CHECK FOR THE (K44) SIGNAL CIRCUIT SHORTED TO THE (F857) 5-VOLT SUPPLY CIRCUIT**

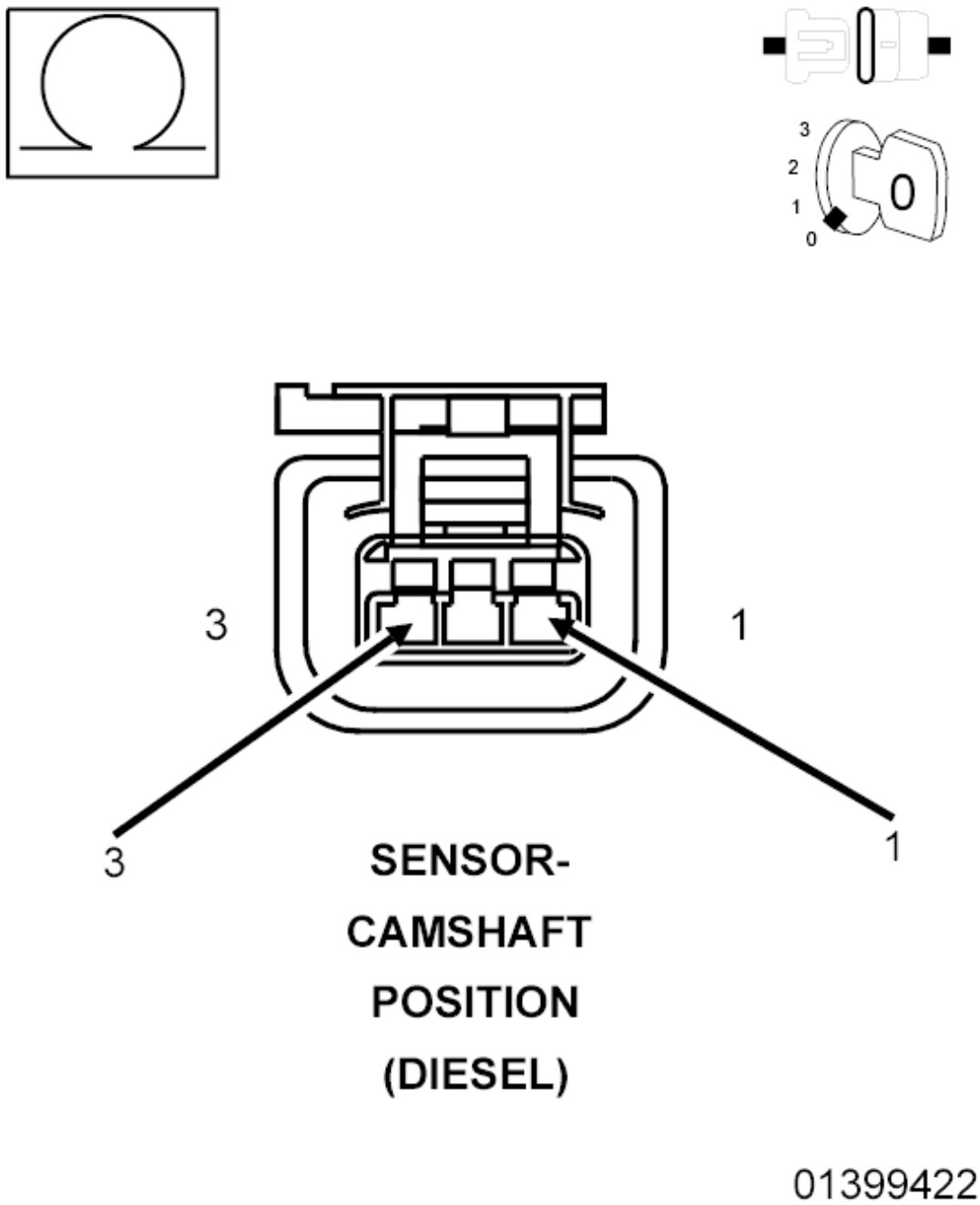

Fig. 141: Checking Signal Circuit For Short To 5-Volt Supply Circuit
Courtesy of CHRYSLER GROUP, LLC

1. Measure the resistance between the (K44) CMP Signal circuit and the (F857) 5-Volt Supply circuit in the CMP Sensor harness connector.

   Is the resistance below 10k Ohms?

   Yes

- Repair the short between the (K44) CMP Signal circuit and the (F857) 5-Volt Supply circuit.
- Perform the POWERTRAIN VERIFICATION TEST - 6.7L. Refer to **POWERTRAIN VERIFICATION TEST - 6.7L** .

No

- Go To 8.

8. **CHECK FOR THE (K44) SIGNAL CIRCUIT SHORTED TO THE (K916) RETURN CIRCUIT**

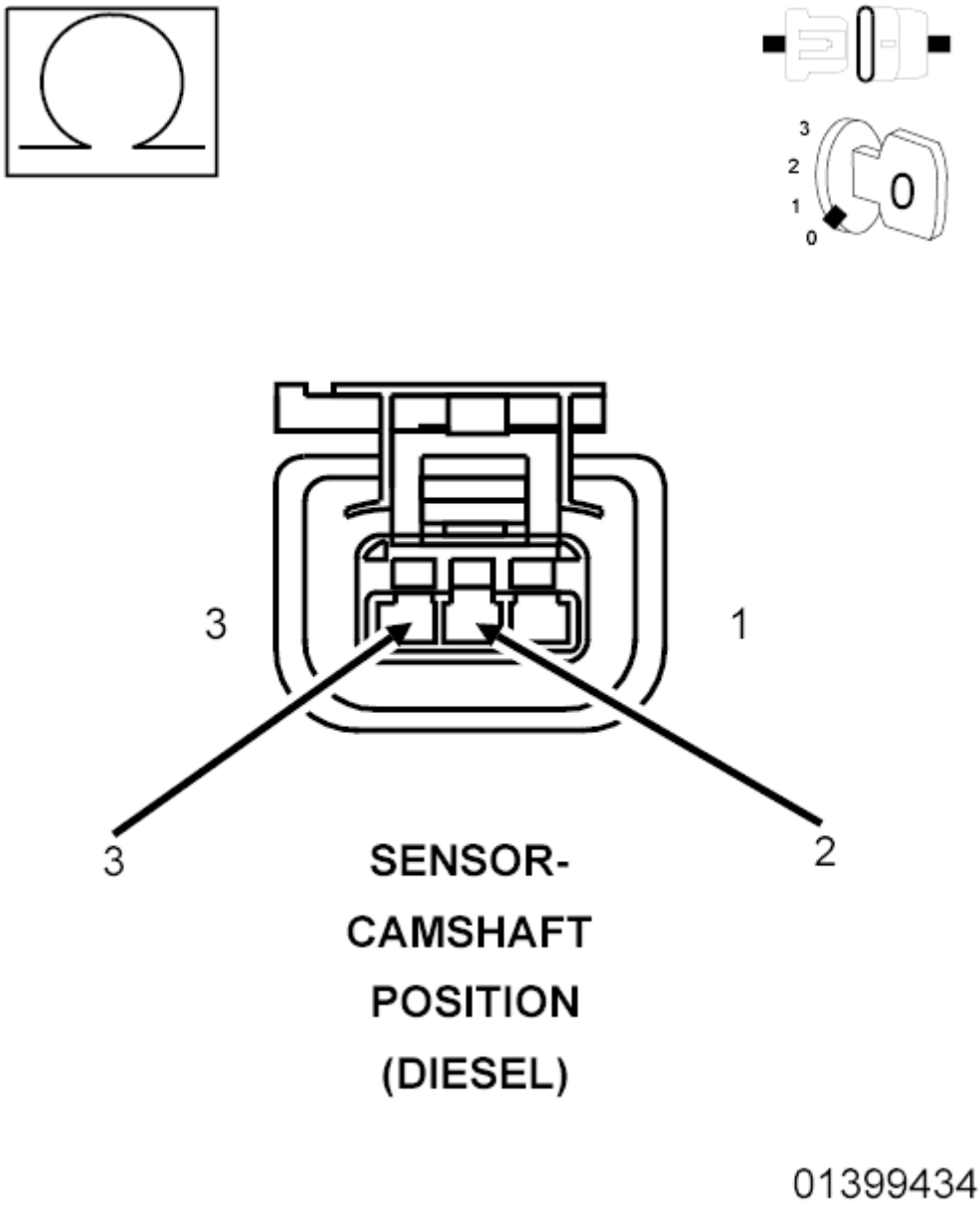

Fig. 142: Checking Signal Circuit For Short To Return Circuit
Courtesy of CHRYSLER GROUP, LLC

1. Measure the resistance between the (K44) CMP Signal circuit and the (K916) Sensor Return circuit at the CMP Sensor harness connector.

   Is the resistance below 10k Ohms?

   Yes

   - Repair the short between the (K44) CMP Signal circuit and the (K916) Sensor Return circuit.
   - Perform the POWERTRAIN VERIFICATION TEST - 6.7L. Refer to **POWERTRAIN VERIFICATION TEST - 6.7L** .

   No

   - Go To 9.

9. **CHECK THE (K44) SIGNAL CIRCUIT FOR A SHORT TO VOLTAGE**

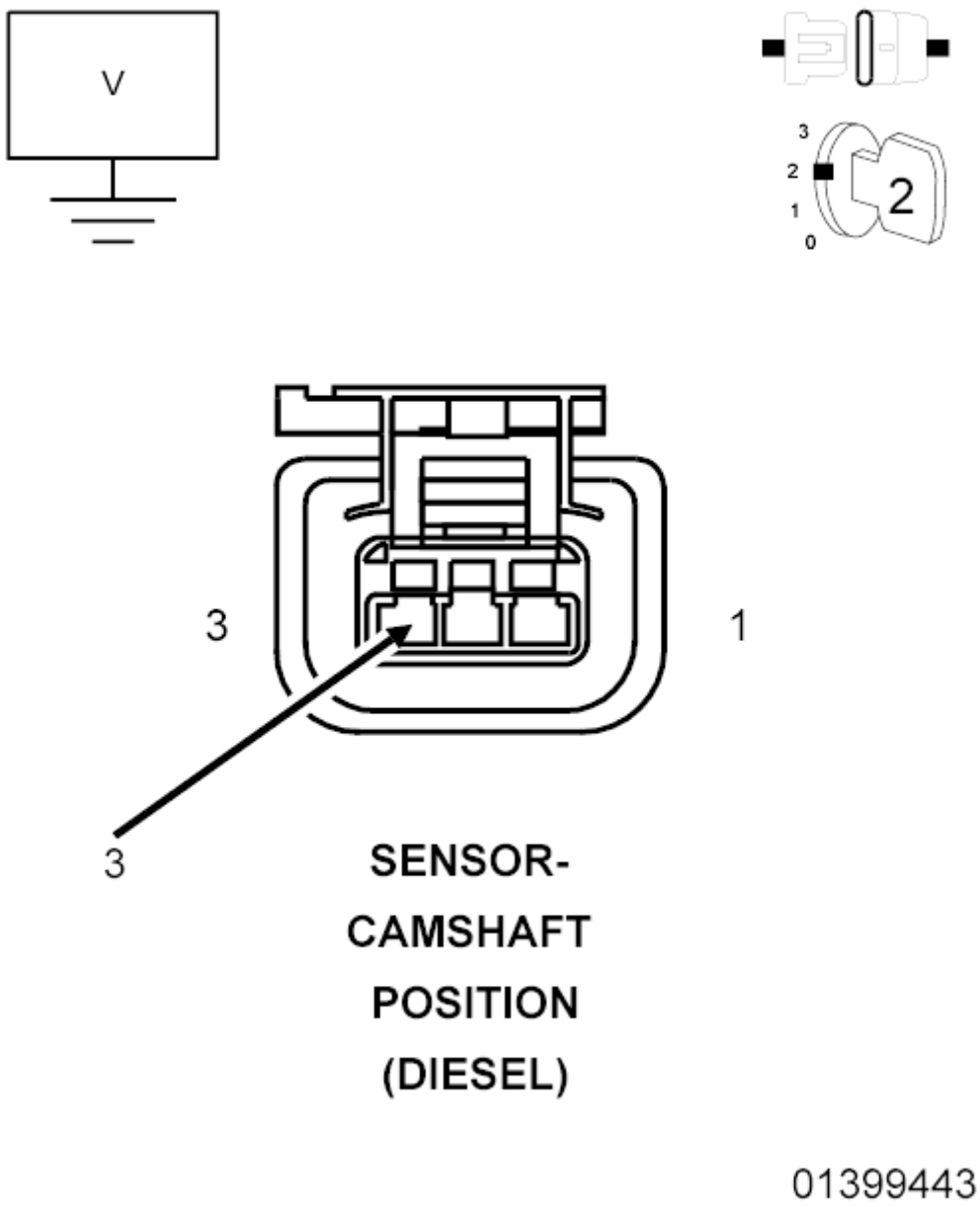

Fig. 143: Checking Signal Circuit For Short To Voltage
Courtesy of CHRYSLER GROUP, LLC

1. Turn the ignition on.
2. Measure the voltage on the (K44) CMP Signal circuit at the CMP Sensor harness connector.

   Is there any voltage present?

   Yes

   - Repair the (K44) CMP Signal circuit for a short to voltage.
   - Perform the POWERTRAIN VERIFICATION TEST - 6.7L. Refer to **POWERTRAIN**

VERIFICATION TEST - 6.7L .

No

- Go To 10.

10. **CHECK THE POWERTRAIN CONTROL MODULE**

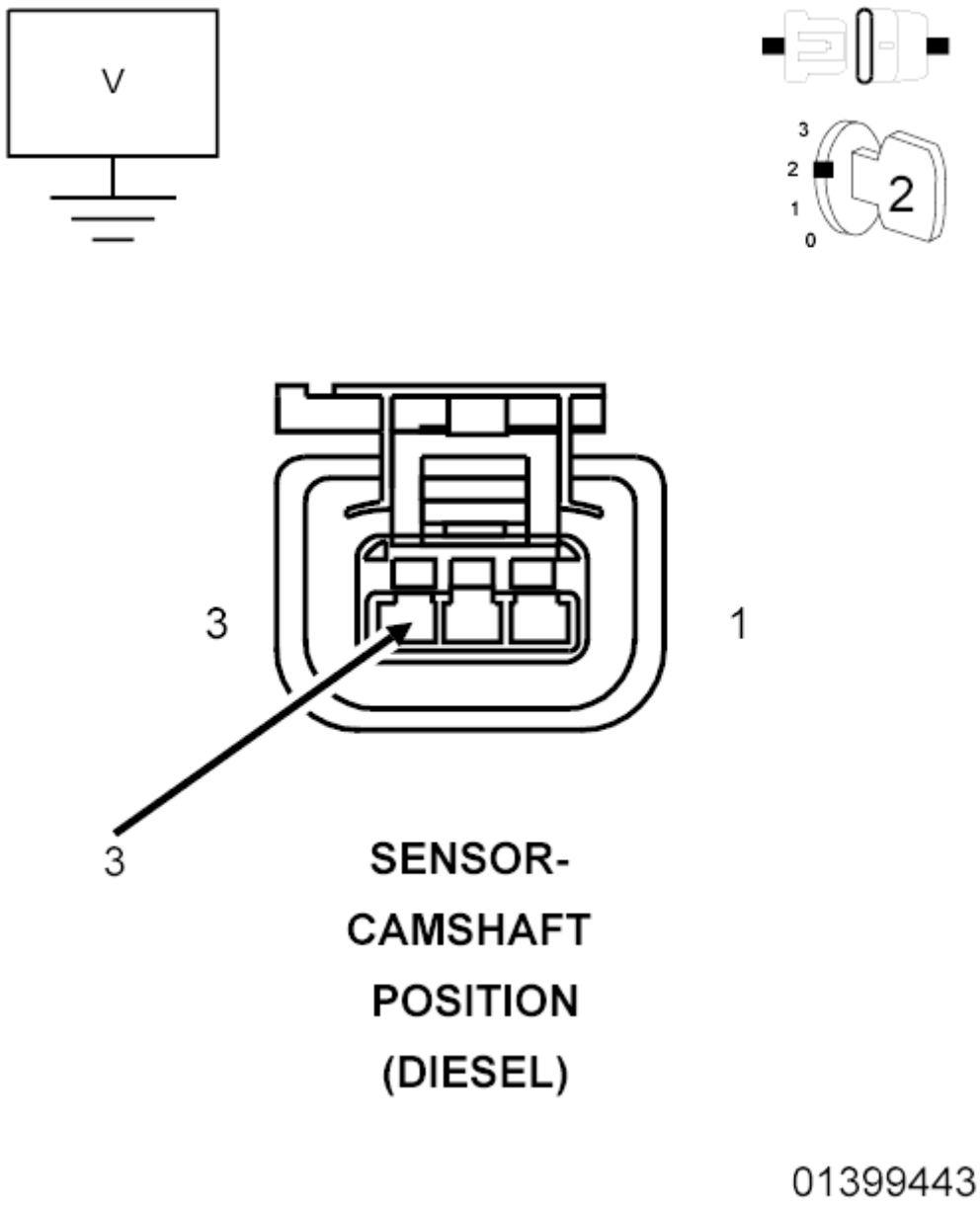

Fig. 144: Checking Signal Circuit For Short To Voltage
Courtesy of CHRYSLER GROUP, LLC

1. Reconnect the PCM C1 harness connector.
2. Measure the voltage of the (K44) CMP Signal circuit at the CMP Sensor harness connector.

Is the voltage below 1.0 volt?

Yes

- Test Complete.

No

- Replace and program the Powertrain Control Module in accordance with the service information. Refer to **PCM - REMOVAL** , also see **PCM/ECM / TCM PROGRAMMING** .
- Perform the POWERTRAIN VERIFICATION TEST - 6.7L. Refer to **POWERTRAIN VERIFICATION TEST - 6.7L** .

P0381-WAIT TO START LAMP INOPERATIVE

For a complete wiring diagram, **refer to appropriate SYSTEM WIRING DIAGRAMS article** .

WHEN MONITORED:

Ignition on.

SET CONDITION:

The cluster sends a signal to the Powertrain Control Module (PCM) that it has detected a failed wait to start lamp.

POSSIBLE CAUSES

Possible Causes
FUSED IGNITION SWITCH OUTPUT CIRCUIT OPEN/HIGH RESISTANCE
WAIT-TO-START LIGHT BULB
WIRING/CONNECTOR PROBLEM

Always perform the Pre-Diagnostic Troubleshooting procedure before proceeding. Refer to PRE-DIAGNOSTIC TROUBLESHOOTING PROCEDURE - 6.7L .

DIAGNOSTIC TEST

1. **WAIT-TO-START LAMP DOES NOT COME ON**
    1. Turn the ignition off.
    2. While watching the Wait-To-Start lamp, turn the ignition key on.

    Did the Wait-To-Start lamp light?

    Yes

- Go To 2.

No

- Go To 3.

2. **WAIT-TO-START LAMP STAYS ON ALL THE TIME**
   1. Turn the ignition off.
   2. While watching the Wait-To-Start lamp, turn the ignition key on.

      Does the Wait-To-Start lamp stay on all the time?

      Yes

      - Go To 3.

      No

      - Wait-To-Start Lamp operating normally. Test passed.
      - Perform the POWERTRAIN VERIFICATION TEST - 6.7L. Refer to **POWERTRAIN VERIFICATION TEST - 6.7L** .
3. **CHECK THE FUSED IGNITION SWITCH OUTPUT CIRCUIT FOR AN OPEN/HIGH RESISTANCE**

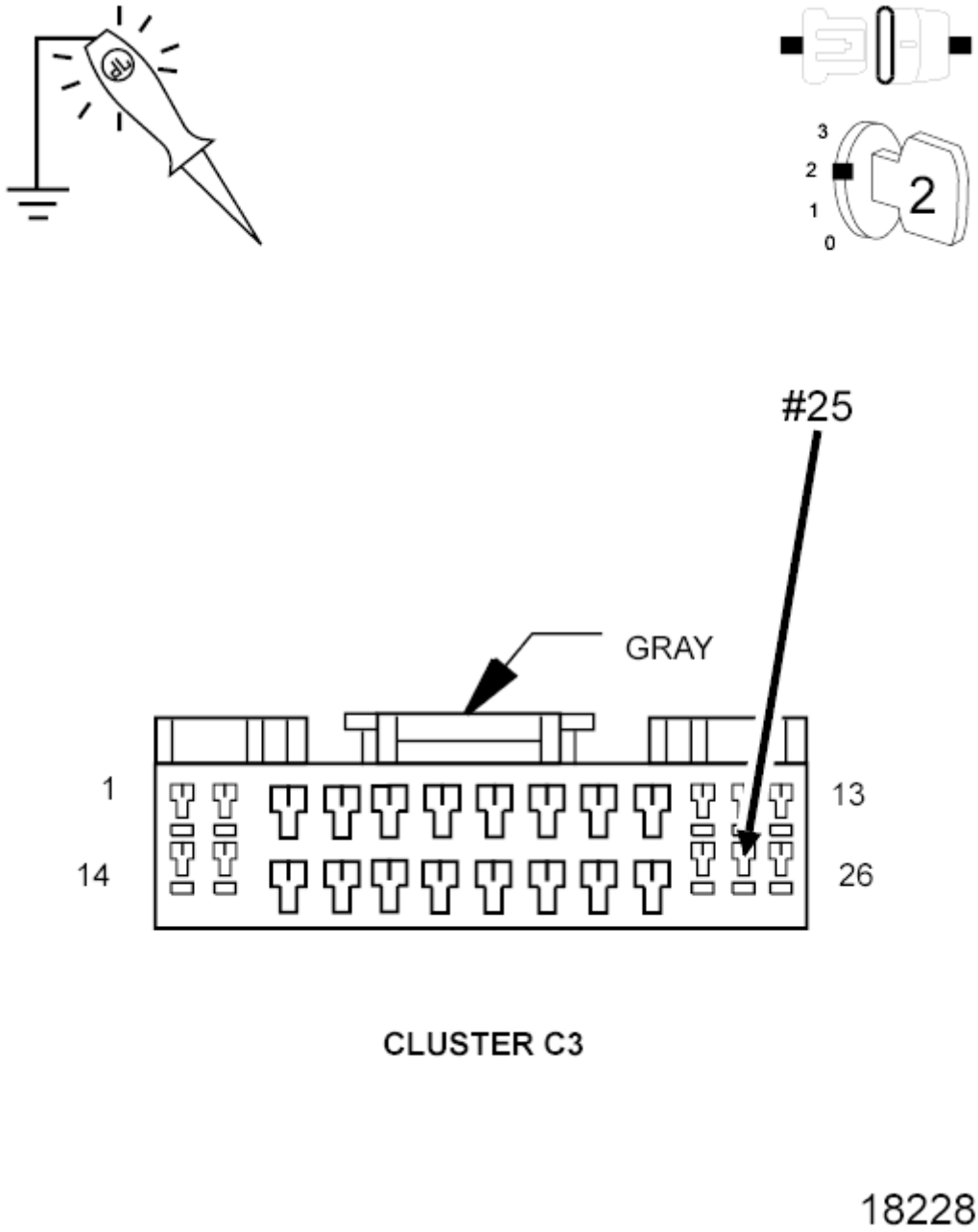

Fig. 145: Locating Fused Ignition Switch Run/Start Circuit In IP Cluster C3 (Gray) Connector
Courtesy of CHRYSLER GROUP, LLC

1. Turn the ignition off.
2. Remove the cluster.

NOTE: Check connectors - Clean/repair as necessary.

3. Turn the ignition on.
4. Using a 12-Volt test light, check the Fused Ignition Switch Run/Start circuit while the ignition is in

the run/start position.

Is the light illuminated and bright?

Yes

- Go To 4.

No

- Repair the Fused Ignition Switch Output circuit for an open or high resistance.
- Perform the POWERTRAIN VERIFICATION TEST - 6.7L. Refer to **POWERTRAIN VERIFICATION TEST - 6.7L** .

4. **CHECK THE WAIT-TO-START LIGHT BULB**
   1. Remove and inspect the Wait-to-Start Bulb.

   Is the Bulb Ok?

   Yes

   - Test complete.

   No

   - Replace the Wait-to-Start Bulb in accordance with the service information.
   - Perform the POWERTRAIN VERIFICATION TEST - 6.7L. Refer to **POWERTRAIN VERIFICATION TEST - 6.7L** .

P0401-EGR SYSTEM PERFORMANCE

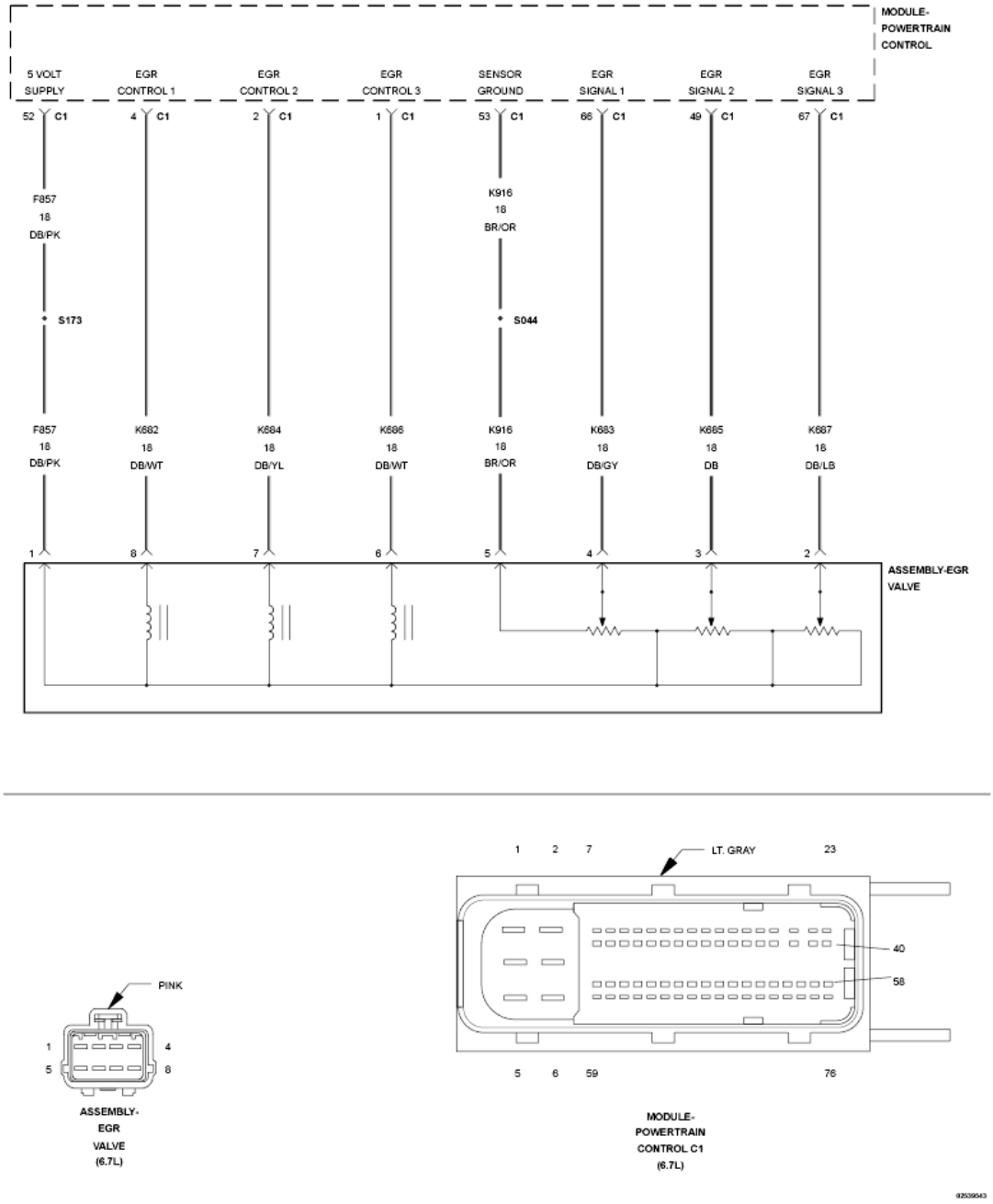

Fig. 146: EGR Valve Assembly Circuit Schematic
Courtesy of CHRYSLER GROUP, LLC

For a complete wiring diagram, **refer to appropriate SYSTEM WIRING DIAGRAMS article** .

THEORY OF OPERATION

This diagnostic is used to check for low Exhaust Gas Recirculation (EGR) flow conditions by calculating an error based on the commanded and actual EGR flow. If the error is too high for a calibrated period of time, the diagnostic fails. This algorithm is not used at areas high on the torque curve. The Powertrain Control Module (PCM) will light the MIL lamp after this monitor runs and fails twice. The PCM will turn off the MIL lamp

once the diagnostic runs and passes in four consecutive drive cycles.

WHEN MONITORED:

Engine running, coolant temperature above a calibrated threshold, intake manifold temperature above a calibrated threshold, EGR valve is open to a calibrated amount.

SET CONDITION:

Commanded versus actual EGR fraction differs by a calibrated threshold.

POSSIBLE CAUSES

Possible Causes
EGR SYSTEM LEAK
INTAKE AIR SYSTEM LEAK
AIR FILTER RESTRICTION
EGR COOLER LEAK
EGR COOLER FOULING
CROSSOVER TUBE RESTRICTION
INTAKE AIR HEATER RESTRICTION

Always perform the Pre-Diagnostic Troubleshooting procedure before proceeding. Refer to PRE-DIAGNOSTIC TROUBLESHOOTING PROCEDURE - 6.7L .

DIAGNOSTIC TEST

1. **CHECK FOR AIR FILTER RESTRICTION**

   NOTE: Repair any other EGR related DTCs before proceeding.

   1. Examine the Air Filter minder.

      Is the air filter restriction within allowable limits?

      Yes

      - Go To 2.

      No

      - Replace the Air Filter in accordance with the service information.
      - Perform the POWERTRAIN VERIFICATION TEST - 6.7L. Refer to **POWERTRAIN VERIFICATION TEST - 6.7L** .
2. **CHECK FOR INTAKE AIR HEATER RESTRICTION**

1. Remove air inlet connection and inspect Intake Air Heater.

   Is the Intake Air Heater restricted?

   Yes

   - Clean area and reassemble.
   - Perform the POWERTRAIN VERIFICATION TEST - 6.7L. Refer to **POWERTRAIN VERIFICATION TEST - 6.7L** .

   No

   - Go To 3.

3. **CHECK FOR EGR SYSTEM LEAK**
   1. Look for visible signs (soot streaks) of an external EGR system leaks around the V-band clamps and connections. Ensure that all torque is within specifications for alk EGR system components.

      Are there any EGR leaks?

      Yes

      - Repair the leak in the EGR system.
      - Perform the POWERTRAIN VERIFICATION TEST - 6.7L. Refer to **POWERTRAIN VERIFICATION TEST - 6.7L** .

      No

      - Go To 4.

4. **CHECK FOR INTAKE AIR SYSTEM LEAK**
   1. Check for leaks in the Intake Air System. Perform the INTAKE AIR SYSTEM PRESSURE TEST. Refer to **DIAGNOSIS AND TESTING, 6.7L** .

      Was an Intake Air System leak found?

      Yes

      - Repair the Intake Air System leak.
      - Perform the POWERTRAIN VERIFICATION TEST - 6.7L. Refer to **POWERTRAIN VERIFICATION TEST - 6.7L** .

      No

      - Go To 5.

5. **CHECK THE THERMOSTAT OUTLET**
   1. Remove the EGR Outlet Temperature Sensor from the thermostat outlet.

Is the outlet free of debris?

Yes

- Go To 6.

No

- Remove debris from outlet.
- Perform the POWERTRAIN VERIFICATION TEST - 6.7L. Refer to **POWERTRAIN VERIFICATION TEST - 6.7L** .

6. **CHECK FOR EGR COOLER LEAK**
   1. Verify EGR Cooler is not leaking.
   2. Check for coolant in EGR plumbing, engine overheat fault codes, and low coolant level.

   Are there signs of an EGR Cooler leak?

   Yes

   - Replace the EGR Cooler in accordance with the service information.
   - Perform the POWERTRAIN VERIFICATION TEST - 6.7L. Refer to **POWERTRAIN VERIFICATION TEST - 6.7L** .

   No

   - Go To 7.
7. **CHECK FOR EGR CROSSOVER TUBE RESTRICTION**
   1. Remove EGR Crossover tube from EGR Cooler and EGR Valve.
   2. Inspect tube for restriction.

   Is the EGR crossover tube restricted?

   Yes

   - If possible, clean the tube. If not, replace the tube.
   - Perform the POWERTRAIN VERIFICATION TEST - 6.7L. Refer to **POWERTRAIN VERIFICATION TEST - 6.7L** .

   No

   - Go To 8.
8. **CHECK FOR EGR COOLER FOULING**
   1. Remove and clean the EGR Cooler with approved Mopar® EGR System cleaner.
   2. Reinstall the EGR Cooler.

3. With the scan tool, erase DTCs.
4. Turn the ignition off for 75 seconds.
5. Start the engine. It may be necessary to test drive the vehicle.
6. With the scan tool, check for a one trip fault logged against DTC P0401.

   Is there a one trip fault logged against DTC P0401?

   Yes

   - Replace the EGR Cooler in accordance with the service information.
   - Perform the POWERTRAIN VERIFICATION TEST - 6.7L. Refer to **POWERTRAIN VERIFICATION TEST - 6.7L** .

   No

   - Test complete.

P0402-EGR FLOW EXCESSIVE DETECTED

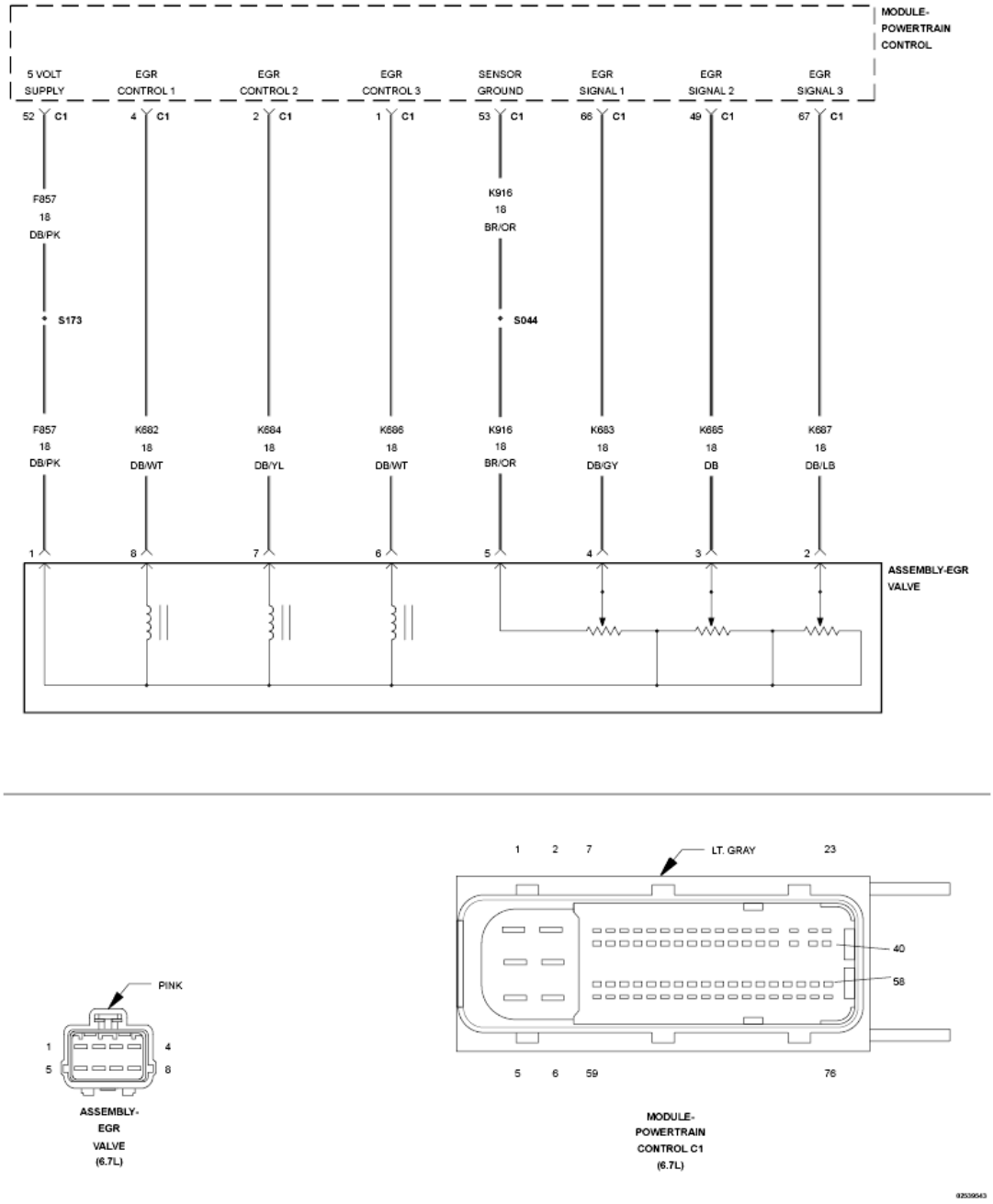

Fig. 147: EGR Valve Assembly Circuit Schematic
Courtesy of CHRYSLER GROUP, LLC

For a complete wiring diagram, **refer to Wiring Information** .

THEORY OF OPERATION

The purpose of this monitor is to check if the Exhaust Gas Recirculation (EGR) flow is higher than commanded. The diagnostic closes the EGR valve, and limits the EGR Throttle Control Valve. It then looks at fresh air flow fraction and the difference in pressure between the Exhaust Gas Pressure sensor and Boost Pressure sensor to determine if the EGR valve is leaking. The Powertrain Control Module (PCM) will

illuminate the MIL lamp after the diagnostic runs and fails in two consecutive drive cycles. The PCM will also illuminate the ETC lamp. The MIL lamp will turn off once the diagnostic runs and passes in 4 consecutive drive cycles.

WHEN MONITORED:

Engine running, at idle, coolant temperature above a calibrated threshold, intake manifold temperature above a calibrated threshold, EGR valve is closed.

SET CONDITION:

EGR Throttle Control Valve closed, EGR fraction increases more than a calibrated threshold.

POSSIBLE CAUSES

Possible Causes
EXHAUST GAS PRESSURE SENSOR
EGR AIRFLOW THROTTLE CONTROL VALVE
EXHAUST SYSTEM LEAK
INTAKE SYSTEM LEAK
EGR VALVE

Always perform the Pre-Diagnostic Troubleshooting procedure before proceeding. Refer to PRE-DIAGNOSTIC TROUBLESHOOTING PROCEDURE - 6.7L .

DIAGNOSTIC TEST

NOTE: **If other EGR related DTCs are present and active, repair those DTCs before proceeding.**

1. **ACTIVE DTCS**
    1. Ignition on, engine not running.
    2. With the scan tool, check for active DTCs.

    Is the DTC active?

    Yes

    - Go To 2.

    No

    - Perform the INTERMITTENT CONDITION - 6.7L diagnostic procedure. Refer to **INTERMITTENT CONDITION - 6.7L** .
2. **CHECK THE THERMOSTAT OUTLET FOR A RESTRICTION**

1. Turn the ignition off.
2. Remove the Exhaust Gas Pressure sensor from the thermostat outlet.
3. Inspect the Exhaust Gas Pressure sensor and the thermostat outlet for build up or debris.

   Are the Exhaust Gas Pressure Sensor and the thermostat outlet free of debris?

   Yes

   - Go To 3.

   No

   - Remove debris from Exhaust Gas Pressure Sensor and the thermostat outlet.
   - Go To 3.

3. **CHECK THE EXHAUST GAS PRESSURE SENSOR TUBE**
   1. Remove the steel tube from the exhaust manifold to the Exhaust Gas Pressure Sensor port.

      Is the tube free from debris?

      Yes

      - Go To 4.

      No

      - Clean the tube and reinstall.
      - Go To 4.

4. **CHECK THE EXHAUST SYSTEM**
   1. Perform the CHECKING THE EXHAUST SYSTEM FOR LEAKS diagnostic procedure. Refer to **DIAGNOSIS AND TESTING, 6.7L** .

      Was an Exhaust System leak found?

      Yes

      - Repair the Exhaust System leak.
      - Perform the DIESEL AFTERTREATMENT VALIDATION - 6.7L procedure. Refer to **DIESEL AFTERTREATMENT VALIDATION- 6.7L** .

      No

      - Go To 5.

5. **CHECK THE INTAKE SYSTEM**
   1. Perform INTAKE AIR SYSTEM PRESSURE TEST diagnostic procedure. Refer to **DIAGNOSIS**

AND TESTING, 6.7L .

Was an Intake System leak found?

Yes

- Repair the Intake Air System leak.
- Perform the DIESEL AFTERTREATMENT VALIDATION - 6.7L procedure. Refer to **DIESEL AFTERTREATMENT VALIDATION- 6.7L** .

No

- Go To 6.

6. **CHECK THE EGR AIRFLOW THROTTLE CONTROL VALVE**
   1. Remove the boot from the EGR Throttle Control Valve. Using a mirror, look at the butterfly valve on the inside of the EGR Throttle Control Valve.
   2. Start the vehicle, let idle for 10 seconds.
   3. Turn ignition off.

   NOTE: If functioning properly the EGR Throttle Control Valve will close immediately after the engine is shut down.

   Did the EGR Throttle Control Valve close immediately after the engine was shut down?

   Yes

   - Go To 7.

   No

   - Replace the EGR Airflow Control Valve in accordance with the service information.
   - Perform the DIESEL AFTERTREATMENT VALIDATION - 6.7L procedure. Refer to **DIESEL AFTERTREATMENT VALIDATION- 6.7L** .

7. **CHECK THE EGR VALVE**
   1. Ignition on, engine not running.
   2. With the scan tool, erase DTC.
   3. Turn the ignition off for 75 seconds.
   4. Start engine and let idle to operating temperature.

   Is DTC still active?

   Yes

   - Remove and clean the EGR valve with Mopar EGR Valve cleaner. Refer to

TURBOCHARGER SYSTEM, CLEANING, 6.7L .

- Go To 8.

No

- Repair complete.
- Perform the DIESEL AFTERTREATMENT VALIDATION - 6.7L procedure. Refer to **DIESEL AFTERTREATMENT VALIDATION- 6.7L** .

8. **ACTIVE DTC**
   1. Ignition on, engine not running.
   2. With the scan tool, erase DTC.
   3. Turn the ignition off for 75 seconds.
   4. Start engine and let idle to operating temperature.

   Is DTC still active?

   Yes

   - Replace EGR Valve in accordance with the service information.
   - Perform the DIESEL AFTERTREATMENT VALIDATION - 6.7L procedure. Refer to **DIESEL AFTERTREATMENT VALIDATION- 6.7L** .

   No

   - Repair complete.
   - Perform the DIESEL AFTERTREATMENT VALIDATION - 6.7L procedure. Refer to **DIESEL AFTERTREATMENT VALIDATION- 6.7L** .

P0404-EGR CONTROL CIRCUIT PERFORMANCE

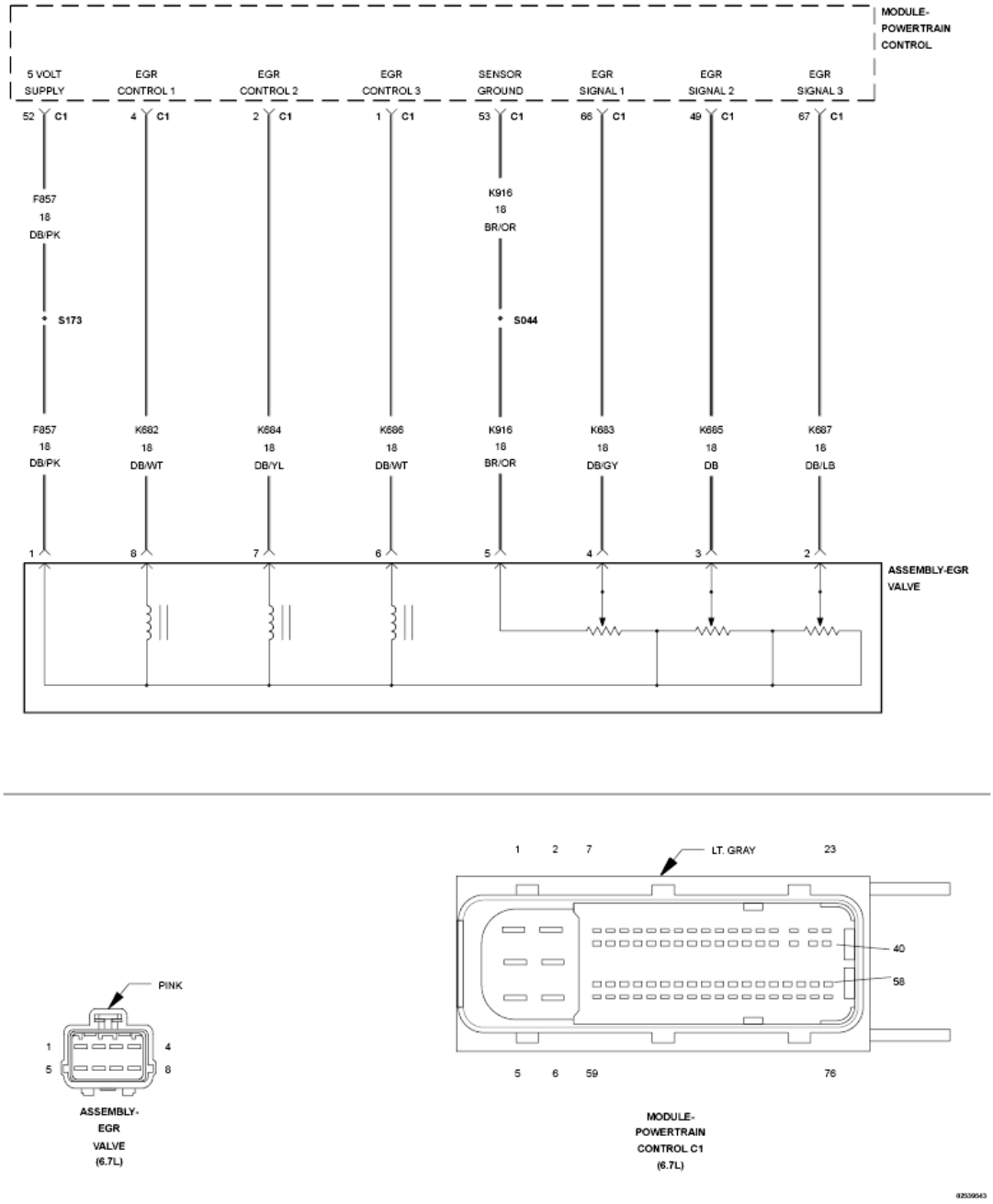

Fig. 148: EGR Valve Assembly Circuit Schematic
Courtesy of CHRYSLER GROUP, LLC

For a complete wiring diagram, **refer to appropriate SYSTEM WIRING DIAGRAMS article** .

THEORY OF OPERATION

The Exhaust Gas Recirculation (EGR) Valve is opened by a motor located on top of the EGR valve. The EGR Valve is spring loaded closed. The motor electronically opens the valve and is controlled by the Powertrain Control Module (PCM). The EGR Valve motor contains three position sensors that detect to location of the EGR Valve. The three position sensors correspond to six valid sectors that the valve can be in. If the valve

position skips a sector(s), a fault counter will increment by one. Once the counter equals a calibrated threshold, the rationality fault becomes active. The position sensors are integral to the EGR Valve assembly and are not serviced separately. The PCM lights the MIL lamp immediately after this diagnostic runs and fails. During this time the PCM will stop controlling the EGR valve. The default position for the valve is closed. The PCM will turn off the MIL lamp after the diagnostic runs and passes in four consecutive drive cycles.

WHEN MONITORED:

Key on, engine off and while running.

SET CONDITION:

The Powertrain Control Module (PCM) detects an overheat condition on the EGR control circuit.

POSSIBLE CAUSES

Possible Causes
POWERTRAIN CONTROL MODULE (PCM)

Always perform the Pre-Diagnostic Troubleshooting procedure before proceeding. Refer to PRE-DIAGNOSTIC TROUBLESHOOTING PROCEDURE - 6.7L .

DIAGNOSTIC TEST

1. **OTHER DTCS**
    1. Ignition on engine off.
    2. With the scan tool, erase DTCs.
    3. Turn the ignition off for 75 seconds.
    4. Start the vehicle. It may be necessary to drive vehicle to reset DTC.
    5. With the scan tool, read DTCs.

    Do you have any additional EGR related DTCs?

    Yes

    - Repair all other EGR DTCs and retest.

    No

    - Replace the Powertrain Control Module in accordance with the service information.
    - Perform the POWERTRAIN VERIFICATION TEST - 6.7L. Refer to **POWERTRAIN VERIFICATION TEST - 6.7L** .

P0405-EGR POSITION SENSOR CIRCUIT LOW

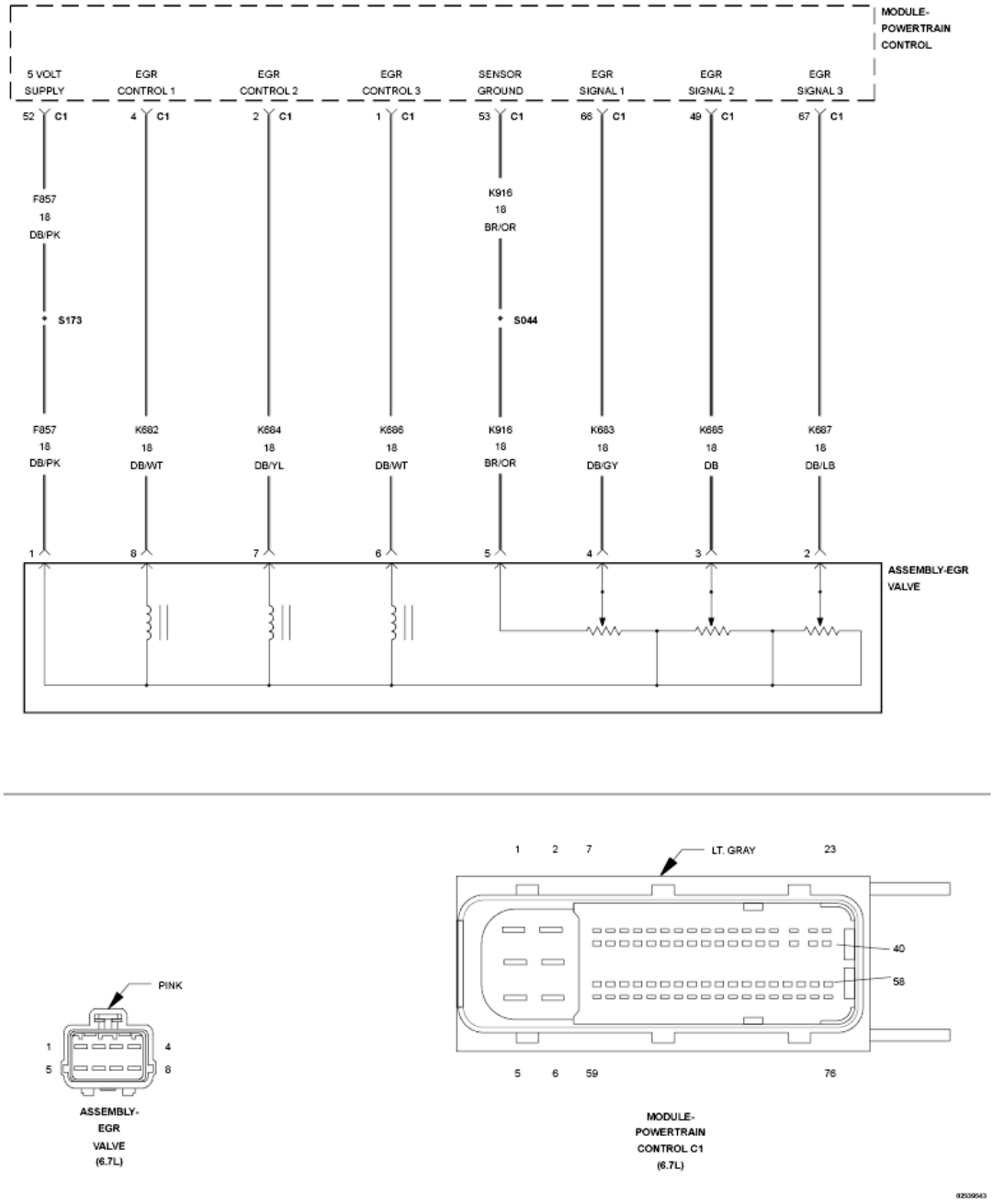

Fig. 149: EGR Valve Assembly Circuit Schematic
Courtesy of CHRYSLER GROUP, LLC

For a complete wiring diagram, **refer to appropriate SYSTEM WIRING DIAGRAMS article** .

THEORY OF OPERATION

The Exhaust Gas Recirculation (EGR) Valve is opened by a motor located on top of the EGR valve. The EGR Valve is spring loaded closed. The motor electronically opens the valve and is controlled by the PCM. The EGR Valve motor contains three position sensors that detect to location of the EGR Valve. These sensors report the position of the valve back to the PCM over the EGR position signal wires. This diagnostic monitors the EGR

solenoid driver circuits. If there is a short of open circuit detected for more than a calibrated period of time then the diagnostic will fail. The PCM lights the MIL lamp immediately after this diagnostic runs and fails. During this time the PCM will stop controlling the EGR valve. The default position for the valve is closed. The PCM will turn off the MIL lamp after the diagnostic runs and passes in four consecutive drive cycles.

WHEN MONITORED:

Ignition on and battery voltage greater than 9 Volts.

SET CONDITION:

All three EGR Valve position sensors are reading either High or Low for five seconds.

POSSIBLE CAUSES

Possible Causes
(F857) 5-VOLT SUPPLY VOLTAGE OPEN/HIGH RESISTANCE
(K916) SENSOR GROUND OPEN/HIGH RESISTANCE
EGR POSITION SIGNAL CIRCUITS SHORTED TO VOLTAGE
EGR POSITION SIGNAL CIRCUITS OPEN/HIGH RESISTANCE
EGR POSITION SIGNAL CIRCUITS SHORTED TO GROUND
EGR VALVE
POWERTRAIN CONTROL MODULE (PCM)

Always perform the Pre-Diagnostic Troubleshooting procedure before proceeding. Refer to PRE-DIAGNOSTIC TROUBLESHOOTING PROCEDURE - 6.7L .

DIAGNOSTIC TEST

1. **ACTIVE DTC**

NOTE: **The EGR Valve harness connector is difficult to lock on to the valve. A connector not locked on completely will cause this DTC to set.**

NOTE: **If there are any 5-Volt supply DTCs present, repair those DTCs before proceeding.**

1. Turn the ignition on.
2. With the scan tool, record all Freeze frame data.
3. With the scan tool, erase DTCs.
4. Turn the ignition off for 75 seconds.
5. Start the vehicle. It may be necessary to drive vehicle to reset DTC.
6. With the scan tool, read DTCs.

Did the DTC reset?

Yes

- Go To 2.

No

- Perform the INTERMITTENT CONDITION - 6.7L diagnostic procedure. Refer to **INTERMITTENT CONDITION - 6.7L** .

2. **CHECK THE (F857) 5-VOLT SUPPLY FOR AN OPEN/HIGH RESISTANCE**

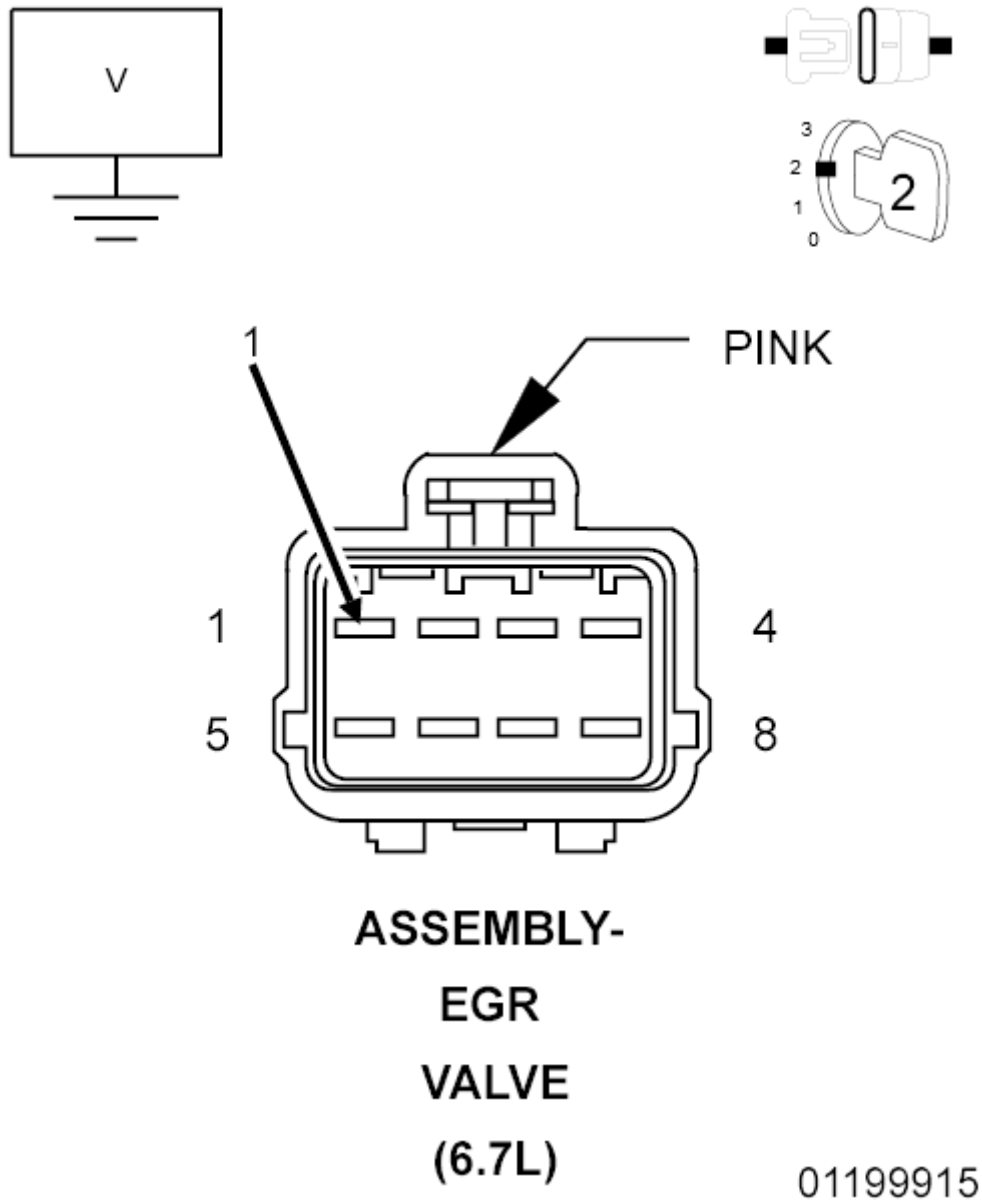

Fig. 150: Checking EGR Valve 5-Volt Supply For An Open

1. Turn the ignition off.
2. Disconnect the EGR Valve harness connector.

NOTE: Check connectors - Clean/repair as necessary.

3. Turn the ignition on, engine not running.
4. Measure the voltage of the (F857) 5-Volt Supply circuit at the EGR Valve harness connector.

Is the voltage reading 5.0 Volts?

Yes

- Go To 3.

No

- Repair the (F857) 5-Volt Supply circuit.
- Perform the POWERTRAIN VERIFICATION TEST - 6.7L. Refer to **POWERTRAIN VERIFICATION TEST - 6.7L** .

3. **CHECK THE EGR POSITION SIGNAL CIRCUITS FOR A SHORT TO VOLTAGE**

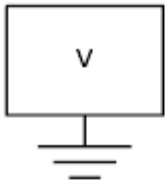

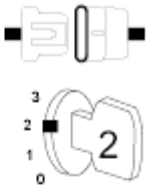

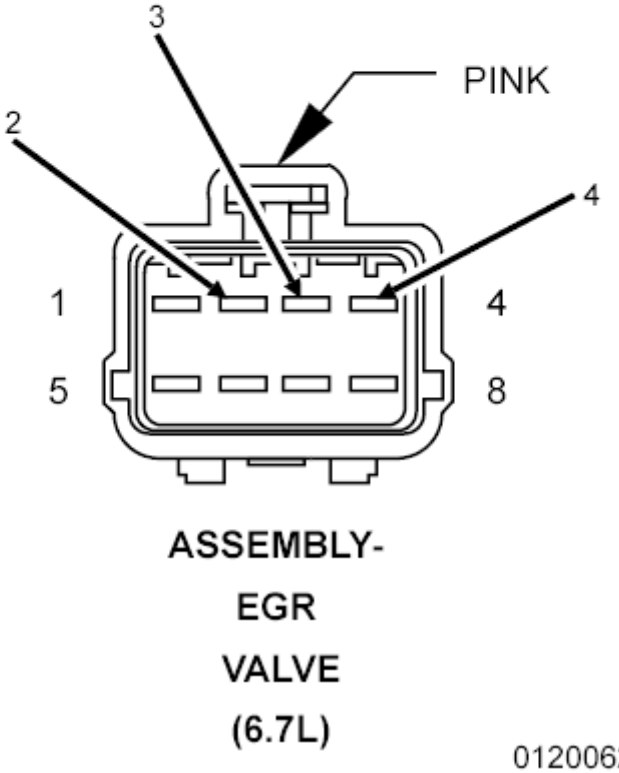

Fig. 151: Checking EGR Position Signal Circuits For Short To Voltage
Courtesy of CHRYSLER GROUP, LLC

1. Measure the voltage of the (K683) EGR Position Sensor Signal 1 circuit at the EGR Valve harness connector.
2. Measure the voltage of the (K685) EGR Position Sensor Signal 2 circuit at the EGR Valve harness connector.
3. Measure the voltage of the (K687) EGR Position Sensor Signal 3 circuit at the EGR Valve harness connector.

   Is the voltage above 2.0 Volts?

Yes

- Repair the short to voltage in the appropriate circuit.
- Perform the POWERTRAIN VERIFICATION TEST - 6.7L. Refer to **POWERTRAIN VERIFICATION TEST - 6.7L** .

No

- Go To 4.

4. **CHECK THE (K916) SENSOR GROUND FOR AN OPEN/HIGH RESISTANCE**
   1. Turn the ignition off.
   2. Disconnect the PCM C1 harness connector.
   3. Measure the resistance of the (K916) Sensor Ground circuit between the EGR Valve harness connector and the PCM C1 harness connector.

   Is the resistance below 5.0 Ohms?

   Yes

   - Go To 5.

   No

   - Repair the (K916) Sensor Ground circuit for an open or high resistance.
   - Perform the POWERTRAIN VERIFICATION TEST - 6.7L. Refer to **POWERTRAIN VERIFICATION TEST - 6.7L** .

5. **CHECK THE EGR POSITION SIGNAL CIRCUITS FOR AN OPEN/HIGH RESISTANCE**
   1. Measure the resistance of the (K683) EGR Position Sensor Signal 1 circuit between the EGR Valve harness connector and the PCM harness connector.
   2. Measure the resistance of the (K685) EGR Position Sensor Signal 2 circuit between the EGR Valve harness connector and the PCM harness connector.
   3. Measure the resistance of the (K687) EGR Position Sensor Signal 3 circuit between the EGR Valve harness connector and the PCM harness connector.

   Is the resistance less than 5.0 Ohms?

   Yes

   - Go To 6.

   No

   - Repair the open or high resistance in the appropriate circuit.
   - Perform the POWERTRAIN VERIFICATION TEST - 6.7L. Refer to **POWERTRAIN**

VERIFICATION TEST - 6.7L .

6. **CHECK THE EGR POSITION SIGNAL CIRCUITS FOR A SHORT TO GROUND**

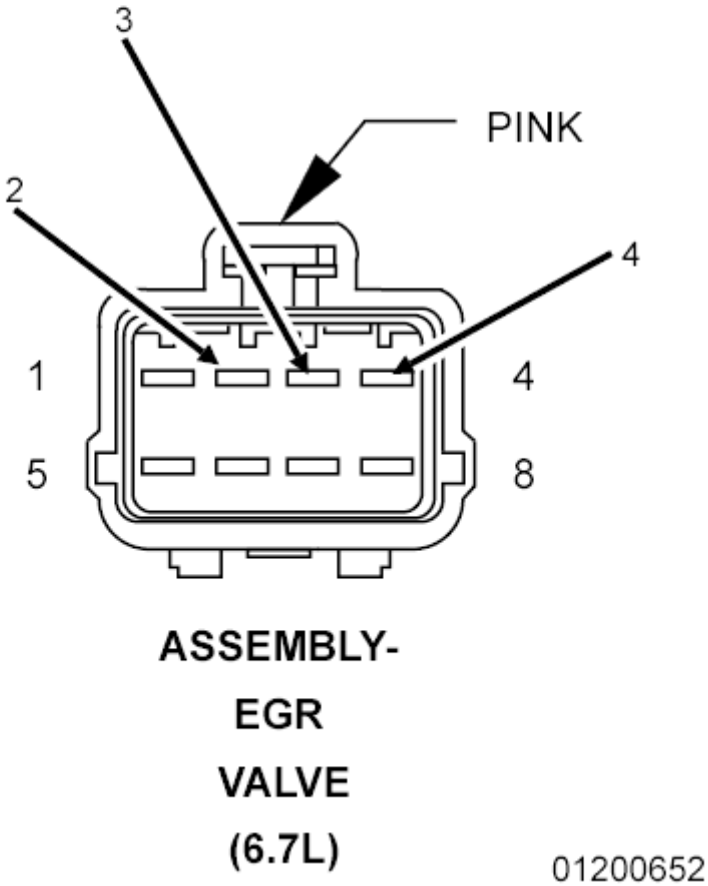

Fig. 152: Checking EGR Position Signal Circuits For Short To Ground
Courtesy of CHRYSLER GROUP, LLC

1. Measure the resistance between ground and the (K683) EGR Position Sensor Signal 1 circuit at the PCM harness connector.
2. Measure the resistance between ground and the (K685) EGR Position Sensor Signal 2 circuit at the

PCM harness connector.

3. Measure the resistance between ground and the (K687) EGR Position Sensor Signal 3 circuit at the PCM harness connector.

   Is the resistance less than 10k Ohms?

   Yes

   - Repair the short to ground in the appropriate circuit.
   - Perform the POWERTRAIN VERIFICATION TEST - 6.7L. Refer to **POWERTRAIN VERIFICATION TEST - 6.7L** .

   No

   - Go To 7.

7. **CHECK THE EGR VALVE**
   1. Reconnect the PCM C1 harness connector.
   2. Replace the EGR Valve.
   3. With the scan tool, erase DTCs.
   4. Turn the ignition off for 75 seconds.
   5. Start the vehicle. It may be necessary to drive vehicle to reset DTC.
   6. With the scan tool, read DTCs.

   Did the DTC reset?

   Yes

   - Replace the Powertrain Control Module in accordance with the service information.
   - Perform the POWERTRAIN VERIFICATION TEST - 6.7L. Refer to **POWERTRAIN VERIFICATION TEST - 6.7L** .

   No

   - Repair complete.
   - Perform the POWERTRAIN VERIFICATION TEST - 6.7L. Refer to **POWERTRAIN VERIFICATION TEST - 6.7L** .

P040B-EXHAUST GAS RECIRCULATION TEMPERATURE SENSOR "A" CIRCUIT PERFORMANCE

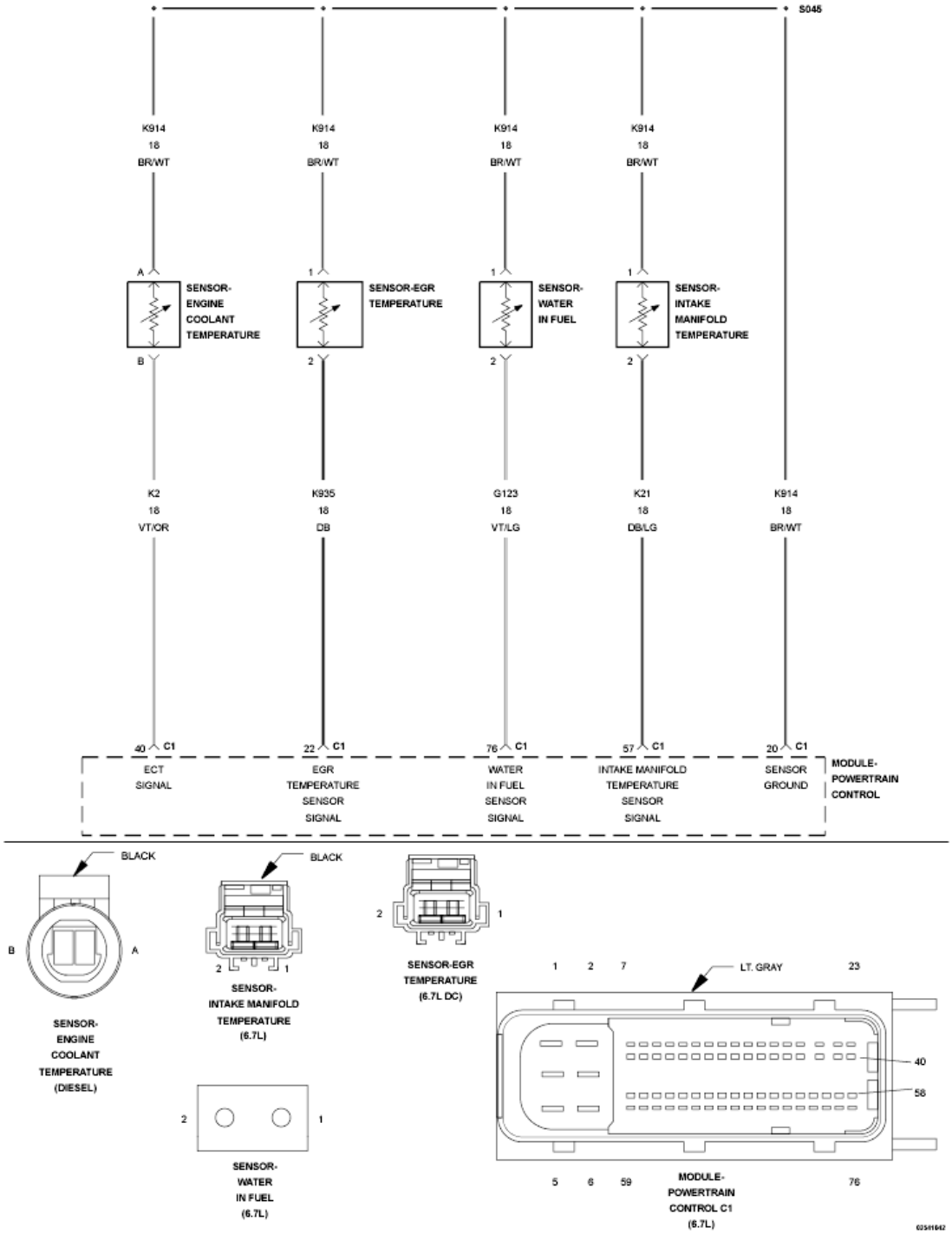

Fig. 153: Intake Manifold Temp, Engine Coolant Temp, EGR Temp, & Water In Fuel Sensor Circuit Schematic
Courtesy of CHRYSLER GROUP, LLC

For a complete wiring diagram, **refer to appropriate SYSTEM WIRING DIAGRAMS article** .

THEORY OF OPERATION

The Exhaust Gas Recirculation (EGR) Outlet Temperature Sensor is a variable resistor sensor and is used to measure the temperature of the EGR gas flow after it exits the EGR cooler. The Powertrain Control Module (PCM) supplies 5-Volts to the exhaust gas recirculation temperature signal circuit. The PCM monitors the change in voltage caused by changes in the resistance of the sensor to determine the EGR outlet temperature. There are two rationality tests. Key-on and engine running. The key-on test compares the EGR Outlet Temperature Sensor value with the Engine Coolant Temperature Sensor and Inlet Air Temperature Sensor. The key-on test fails if the EGR Outlet Temperature Sensor value is different than the key on Engine Coolant Temperature Sensor and Inlet Air Temperature Sensor by more than a calibrated threshold. The engine running test fails if the EGR Outlet Temperature Sensor value does not change by more than a calibrated threshold, over a calibrated period of time. If this fault becomes active the PCM will light the MIL light immediately. During this time the EGR valve will be closed. The PCM turns off the MIL when the diagnostic runs and passes in four consecutive drive cycles.

WHEN MONITORED:

EGR Outlet Temperature and exhaust temperature below a calibrated range at key on.

SET CONDITION:

The key-on test fails if the EGR Outlet Temperature Sensor value is different than the key on Engine Coolant Temperature Sensor and Inlet Air Temperature Sensor by more than a calibrated threshold. The engine running test fails if the EGR Outlet Temperature Sensor value does not change by more than a calibrated threshold, over a calibrated period of time.

POSSIBLE CAUSES

Possible Causes
EXHAUST GAS RECIRCULATION OUTLET TEMPERATURE SENSOR

Always perform the Pre-Diagnostic Troubleshooting procedure before proceeding. Refer to PRE-DIAGNOSTIC TROUBLESHOOTING PROCEDURE - 6.7L .

DIAGNOSTIC TEST

1. **ACTIVE DTC**
    1. Ignition on, engine not running.
    2. With the scan tool, read DTCs.

    Is the DTC active?

    Yes

    - Replace the EGR Outlet Temperature Sensor.
    - Perform the POWERTRAIN VERIFICATION TEST - 6.7L. Refer to **POWERTRAIN VERIFICATION TEST - 6.7L** .

    No

- Go To 2.

2. **CHECK THE EXHAUST GAS RECIRCULATION TEMPERATURE SENSOR**
    1. Turn the ignition off.
    2. Disconnect the EGR Outlet Temperature Sensor harness connector.

    NOTE: Check connectors - Clean/repair as necessary.

    3. Remove the EGR Outlet Temperature Sensor and reconnect the wiring harness connector to the sensor.
    4. Turn the Ignition on, engine off.
    5. Monitor scan tool, while heating the sensor with an external heat source (DO NOT USE OPEN FLAME).

    Does the reading from the sensor increase at least 2.78°C (5°F) on the scan tool?

    Yes

    - Perform the INTERMITTENT CONDITION - 6.7L diagnostic procedure. Refer to **INTERMITTENT CONDITION - 6.7L** .

    No

    - Replace the EGR Outlet Temperature Sensor in accordance with the service information.
    - Perform the POWERTRAIN VERIFICATION TEST - 6.7L. Refer to **POWERTRAIN VERIFICATION TEST - 6.7L** .

P040C-EXHAUST GAS RECIRCULATION TEMPERATURE SENSOR "A" CIRCUIT LOW

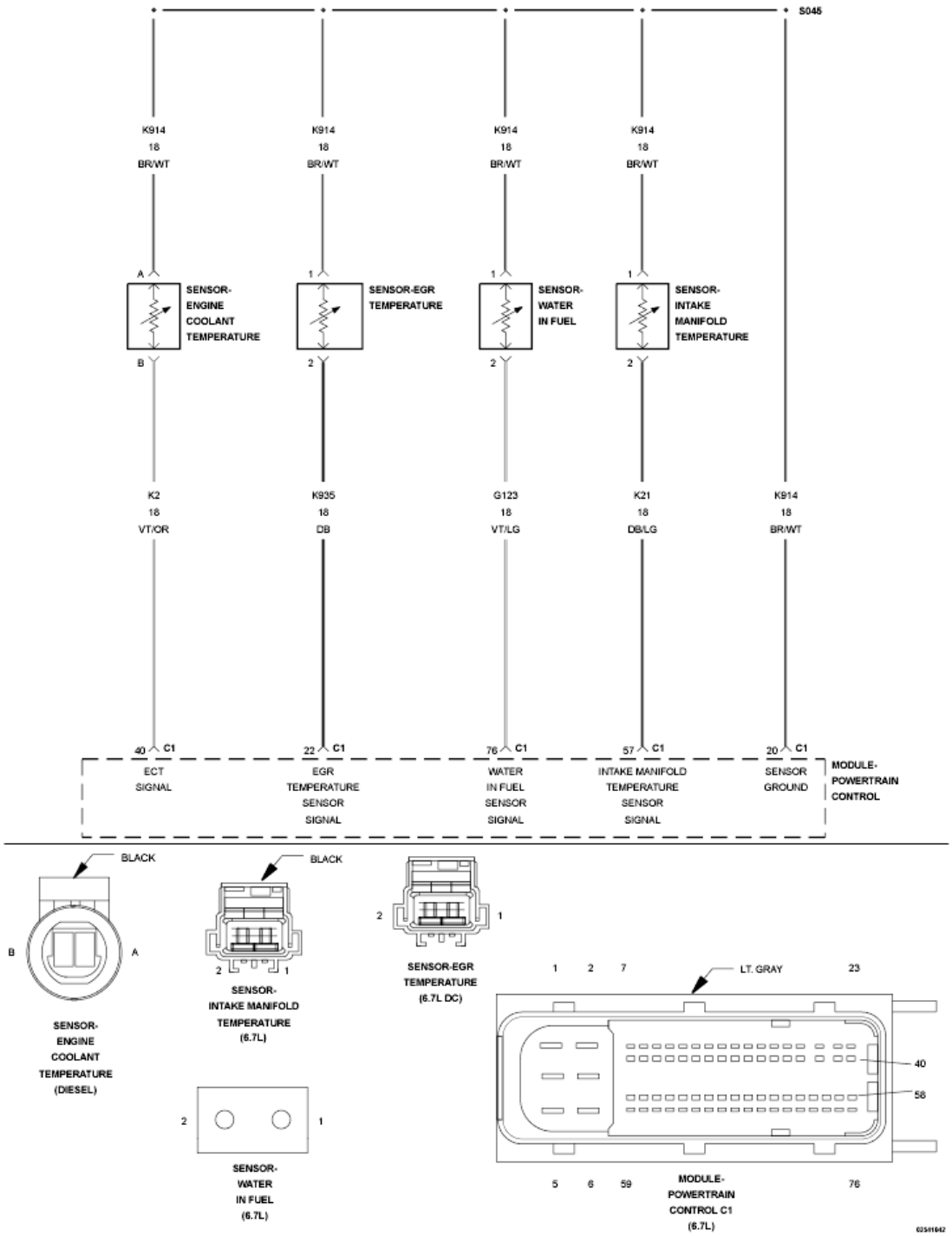

Fig. 154: Intake Manifold Temp, Engine Coolant Temp, EGR Temp, & Water In Fuel Sensor Circuit Schematic
Courtesy of CHRYSLER GROUP, LLC

For a complete wiring diagram, **refer to appropriate SYSTEM WIRING DIAGRAMS article** .

THEORY OF OPERATION

The Exhaust Gas Recirculation (EGR) Outlet Temperature Sensor is a variable resistor sensor and is used to measure the temperature of the EGR gas flow after it exits the EGR Cooler. The Powertrain Control Module (PCM) supplies 5-Volts to the exhaust gas recirculation temperature signal circuit. The PCM monitors the change in voltage caused by changes in the resistance of the sensor to determine the EGR outlet temperature. There are two rationality tests. Key-on and engine running. The key-on test fails if the EGR Outlet Temperature Sensor value is different than the key on temperature estimate by more than a calibrated threshold. The engine running test fails if the EGR Outlet Temperature Sensor value does not change by more than a calibrated threshold, over a calibrated period of time. If this fault becomes active the PCM will light the MIL light immediately. During this time the EGR valve will be closed. The PCM turns off the MIL when the diagnostic runs and passes in four consecutive drive cycles.

WHEN MONITORED:

When the key is on and battery voltage is above 10.4 Volts.

SET CONDITION:

The circuit voltage to the Powertrain Control Module (PCM) is below a calibration threshold for a calibrated period of time.

POSSIBLE CAUSES

Possible Causes
(K935) EGR OUTLET TEMPERATURE SENSOR SIGNAL CIRCUIT SHORTED TO GROUND
(K935) EGR OUTLET TEMPERATURE SENSOR SIGNAL CIRCUIT SHORTED TO THE (K914) SENSOR GROUND CIRCUIT
EXHAUST GAS RECIRCULATION OUTLET TEMPERATURE SENSOR
POWERTRAIN CONTROL MODULE (PCM)

Always perform the Pre-Diagnostic Troubleshooting procedure before proceeding. Refer to PRE-DIAGNOSTIC TROUBLESHOOTING PROCEDURE - 6.7L .

DIAGNOSTIC TEST

1. **ACTIVE DTC**
    1. Turn the ignition on.
    2. With the scan tool, record all Freeze frame data.
    3. With the scan tool, erase DTCs.
    4. Turn the ignition off for 75 seconds.
    5. Turn the ignition on.
    6. With the scan tool, read DTCs.

    Did the DTC reset?

    Yes

- Go To 2.

No

- Perform the INTERMITTENT CONDITION - 6.7L diagnostic procedure. Refer to **INTERMITTENT CONDITION - 6.7L** .

2. **CHECK THE (K935) EGR OUTLET TEMPERATURE SENSOR SIGNAL CIRCUIT FOR A SHORT TO GROUND**

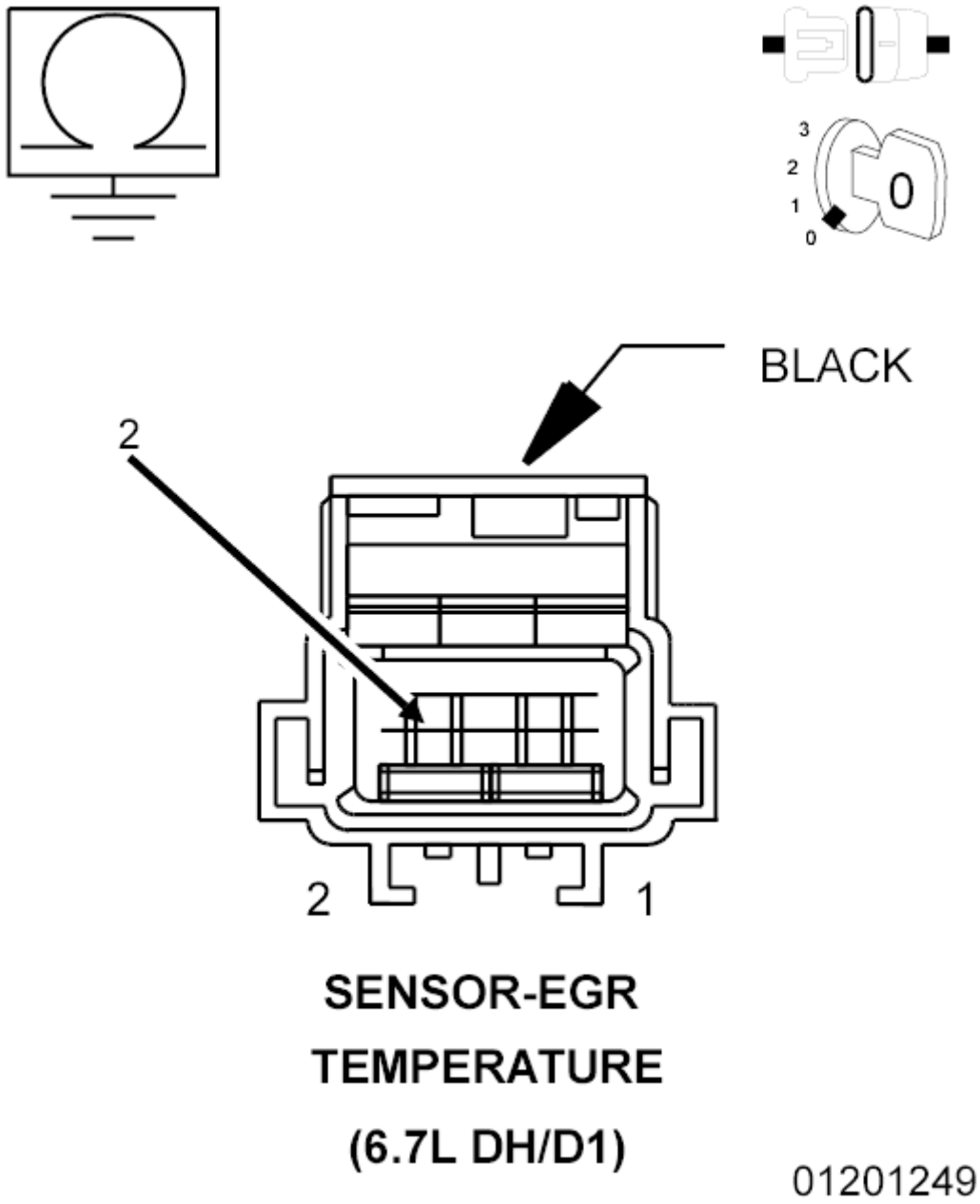

Fig. 155: Checking EGR Outlet Temperature Sensor Signal Circuit For A Short
Courtesy of CHRYSLER GROUP, LLC

1. Turn the ignition off.
2. Disconnect the PCM C1 harness connector.
3. Disconnect the (K935) EGR Outlet Temperature Sensor harness connector.

NOTE: Check connectors - Clean/repair as necessary.

4. Measure the resistance between ground and the (K935) EGR Outlet Temperature Sensor Signal circuit at the sensor harness connector.

   Is the resistance below 10k Ohms?

   Yes

   - Repair the (K935) EGR Outlet Temperature Sensor Signal circuit for a short to ground.
   - Perform the POWERTRAIN VERIFICATION TEST - 6.7L. Refer to **POWERTRAIN VERIFICATION TEST - 6.7L** .

   No

   - Go To 3.

3. **CHECK FOR THE (K935) EGR OUTLET TEMPERATURE SENSOR SIGNAL CIRCUIT SHORTED TO THE (K914) SENSOR GROUND CIRCUIT**

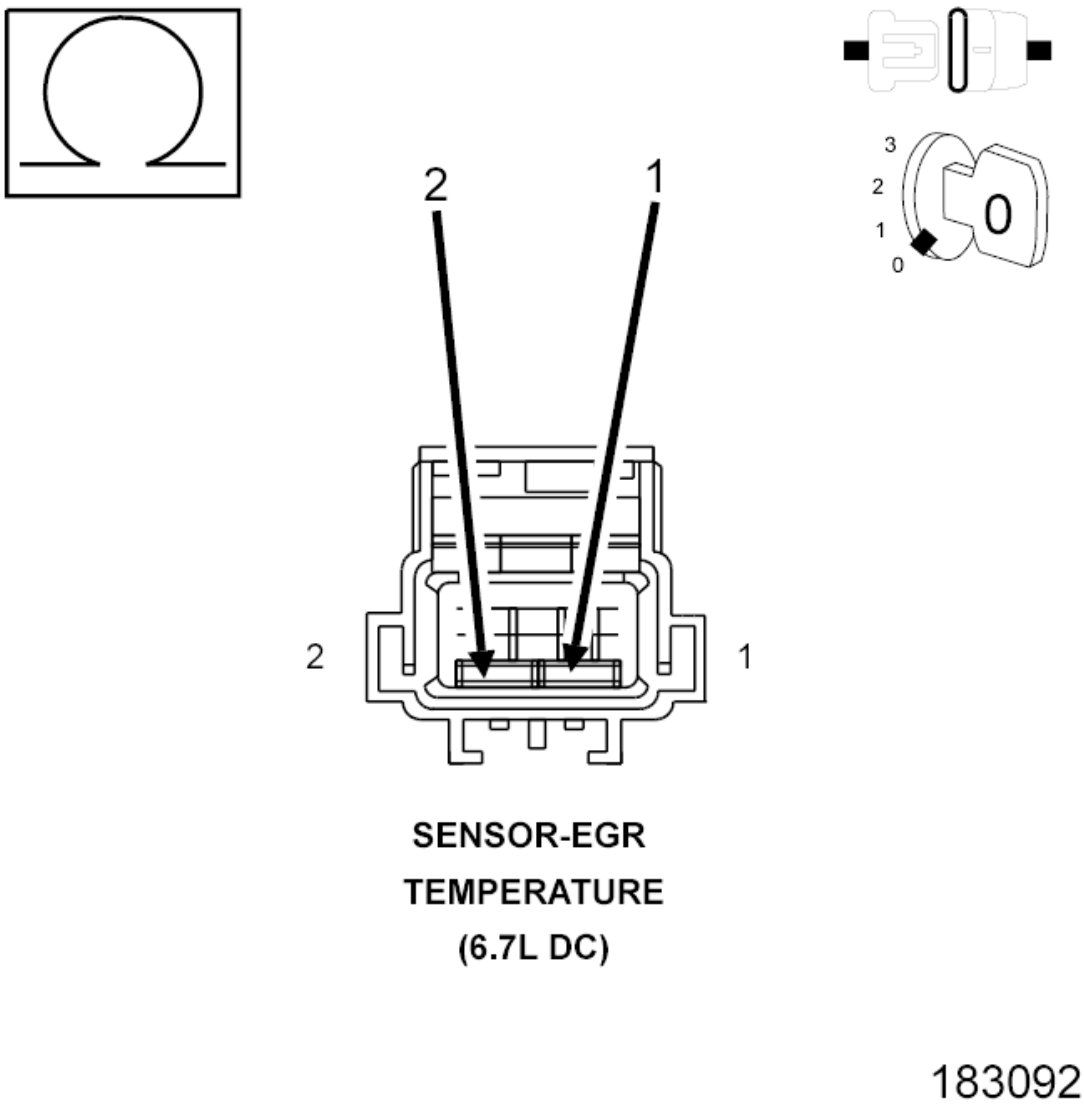

Fig. 156: Checking EGR Outlet Temperature Sensor Signal Circuit For Short To Sensor Ground Circuit
Courtesy of CHRYSLER GROUP, LLC

1. Measure the resistance between the (K935) EGR Outlet Temperature Sensor Signal circuit and the (K914) EGR Outlet Temperature Sensor Return circuit at the EGR Outlet Temperature Sensor harness connector.

   Is the resistance below 10k Ohms?

   Yes

   - Repair the short between the (K935) EGR Outlet Temperature Sensor Signal circuit and the (K914) EGR Outlet Temperature Sensor Return circuit.
   - Perform the POWERTRAIN VERIFICATION TEST - 6.7L. Refer to **POWERTRAIN VERIFICATION TEST - 6.7L** .

No

- Go To 4.

4. **CHECK THE RESISTANCE OF THE EXHAUST GAS RECIRCULATION OUTLET TEMPERATURE SENSOR**
   1. Measure the resistance between the (K935) EGR Outlet Temperature Sensor Signal circuit and the (K914) EGR Outlet Temperature Sensor Return circuit at the EGR Outlet Temperature Sensor.

      Is the resistance between 200 Ohms and 2.4M Ohms?

      Yes

      - Replace the Powertrain Control Module in accordance with the service information.
      - Perform the POWERTRAIN VERIFICATION TEST - 6.7L. Refer to **POWERTRAIN VERIFICATION TEST - 6.7L** .

      No

      - Replace the EGR Outlet Temperature Sensor in accordance with the service information.
      - Perform the POWERTRAIN VERIFICATION TEST - 6.7L. Refer to **POWERTRAIN VERIFICATION TEST - 6.7L** .

P040D-EXHAUST GAS RECIRCULATION TEMPERATURE SENSOR "A" CIRCUIT HIGH

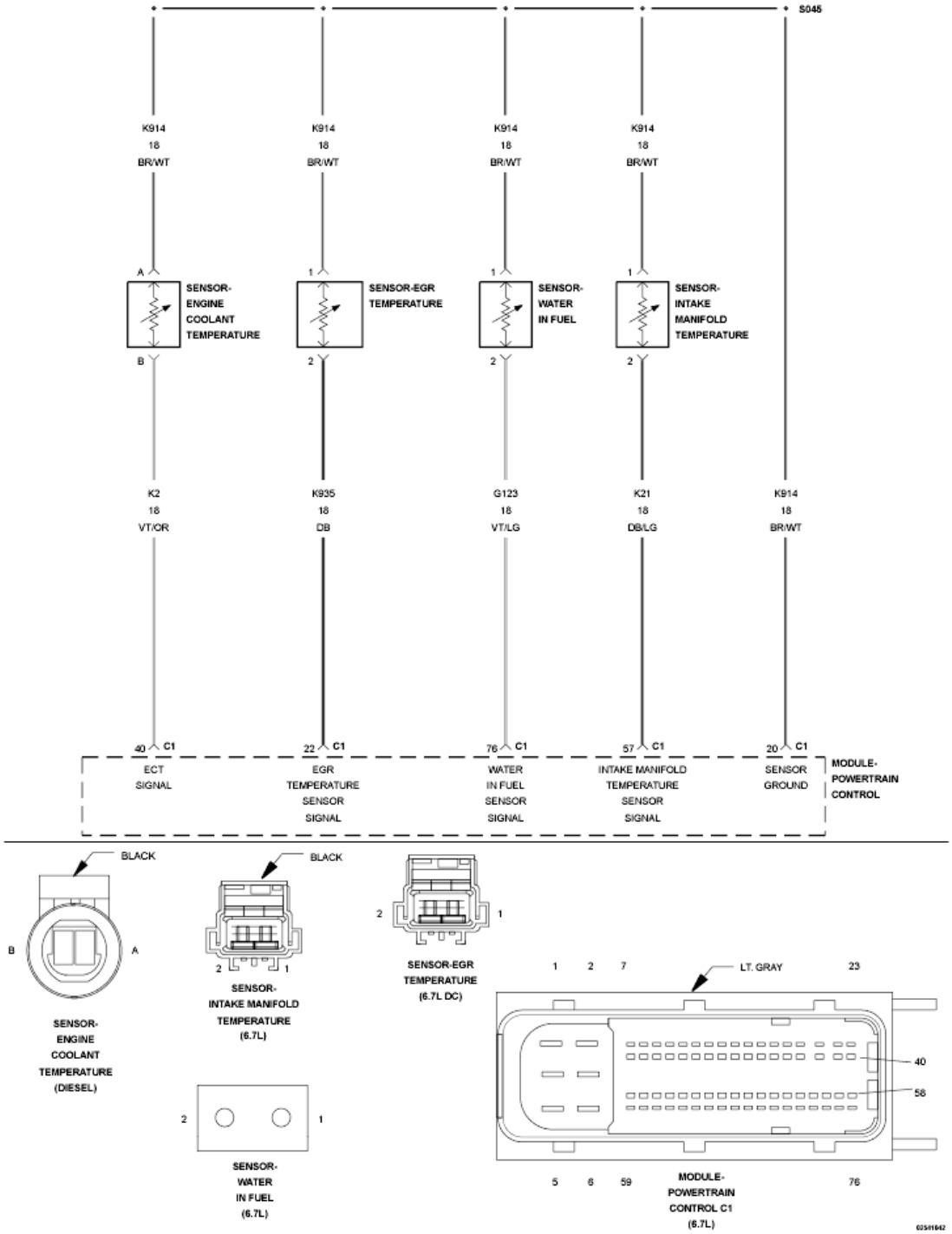

Fig. 157: Intake Manifold Temp, Engine Coolant Temp, EGR Temp, & Water In Fuel Sensor Circuit Schematic
Courtesy of CHRYSLER GROUP, LLC

For a complete wiring diagram, **refer to appropriate SYSTEM WIRING DIAGRAMS article** .

THEORY OF OPERATION

The Exhaust Gas Recirculation Temperature Sensor is a variable resistor sensor and is used to measure the temperature of the EGR gas flow after it exits the EGR Cooler. The Powertrain Control Module (PCM) supplies 5-Volts to the exhaust gas recirculation temperature signal circuit. The PCM monitors the change in voltage caused by changes in the resistance of the sensor to determine the coolant temperature. The exhaust gas recirculation temperature value is used by the PCM for the engine protection system, and engine emissions control. This fault code is set active if the sensor signal voltage is above or below the normal operating range for the sensor and the PCM has commanded the EGR valve open. This fault code will not be set active if the PCM has commanded the EGR valve closed. If this fault becomes active the PCM will light the MIL light immediately. During this time the EGR valve will be closed. The PCM turns off the MIL when the diagnostic runs and passes in four consecutive drive cycles.

WHEN MONITORED:

When the key is on and battery voltage is above 10.4 Volts.

SET CONDITION:

The circuit voltage to the Powertrain Control Module (PCM) is above a calibration threshold for a five minutes.

POSSIBLE CAUSES

Possible Causes
(K935) EGR OUTLET TEMPERATURE SENSOR SIGNAL CIRCUIT OPEN
(K935) EGR OUTLET TEMPERATURE SENSOR SIGNAL CIRCUIT SHORTED TO VOLTAGE
(K914) EGR OUTLET TEMPERATURE SENSOR RETURN CIRCUIT OPEN
EXHAUST GAS RECIRCULATION OUTLET TEMPERATURE SENSOR
POWERTRAIN CONTROL MODULE (PCM)

Always perform the Pre-Diagnostic Troubleshooting procedure before proceeding. Refer to PRE-DIAGNOSTIC TROUBLESHOOTING PROCEDURE - 6.7L .

DIAGNOSTIC TEST

1. **ACTIVE DTC**
    1. Turn the ignition on.
    2. With the scan tool, record all Freeze frame data.
    3. With the scan tool, erase DTCs.
    4. Turn the ignition off for 75 seconds.
    5. Turn the ignition on for at least five minutes.
    6. With the scan tool, read DTCs.

    Did the DTC reset?

    Yes

- Go To 2.

No

- Perform the INTERMITTENT CONDITION - 6.7L diagnostic procedure. Refer to **INTERMITTENT CONDITION - 6.7L** .

2. **CHECK THE (K935) EGR OUTLET TEMPERATURE SENSOR SIGNAL CIRCUIT FOR A SHORT TO VOLTAGE**

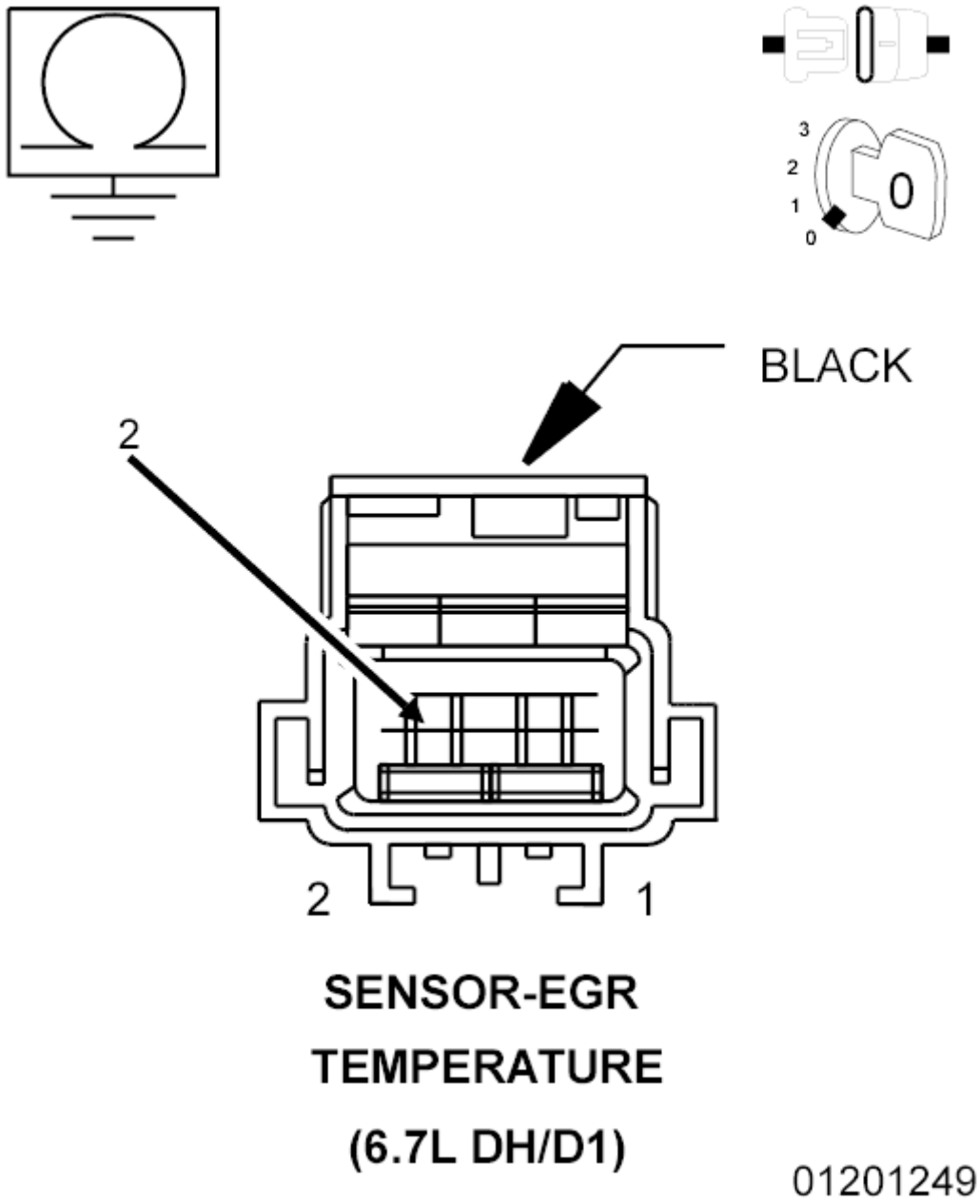

Fig. 158: Checking EGR Outlet Temperature Sensor Signal Circuit For A Short
Courtesy of CHRYSLER GROUP, LLC

1. Turn the ignition on.
2. Disconnect the (K935) EGR Outlet Temperature Sensor harness connector.

   NOTE: Check connectors - Clean/repair as necessary.

3. Measure the voltage of the (K935) EGR Outlet Temperature Sensor Signal circuit at the sensor harness connector.

   Is the voltage reading above 5.1 Volts?

   Yes

   - Repair the (K935) EGR Outlet Temperature Sensor Signal circuit for a short to voltage.
   - Perform the POWERTRAIN VERIFICATION TEST - 6.7L. Refer to **POWERTRAIN VERIFICATION TEST - 6.7L** .

   No

   - Go To 3.

3. **CHECK THE (K935) EGR OUTLET TEMPERATURE SENSOR SIGNAL CIRCUIT FOR AN OPEN/HIGH RESISTANCE**

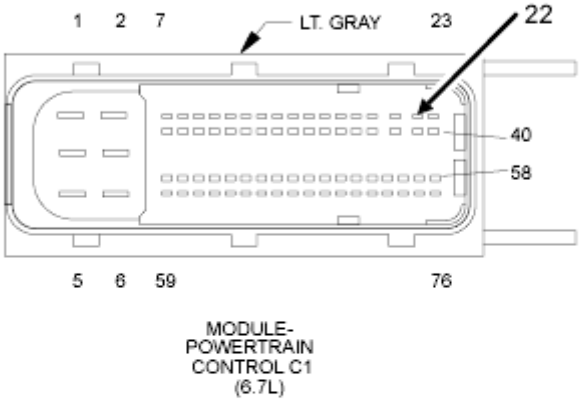

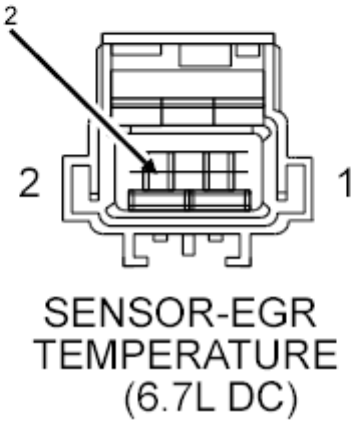

Fig. 159: Checking EGR Outlet Temperature Sensor Signal Circuit For Open Or High Resistance
Courtesy of CHRYSLER GROUP, LLC

1. Turn the ignition off.
2. Disconnect the PCM C1 harness connector.

NOTE: Check connectors - Clean/repair as necessary.

3. Measure the resistance of the (K935) EGR Outlet Temperature Sensor Signal circuit between the EGR Outlet Temperature Sensor harness connector and the PCM C1 harness connector.

   Is the resistance below 5.0 Ohms?

Yes

- Go To 4.

No

- Repair the (K935) EGR Outlet Temperature Sensor Signal circuit for an open or high resistance.
- Perform the POWERTRAIN VERIFICATION TEST - 6.7L. Refer to **POWERTRAIN VERIFICATION TEST - 6.7L** .

4. **CHECK THE (K914) EGR OUTLET TEMPERATURE SENSOR RETURN CIRCUIT FOR AN OPEN/HIGH RESISTANCE**

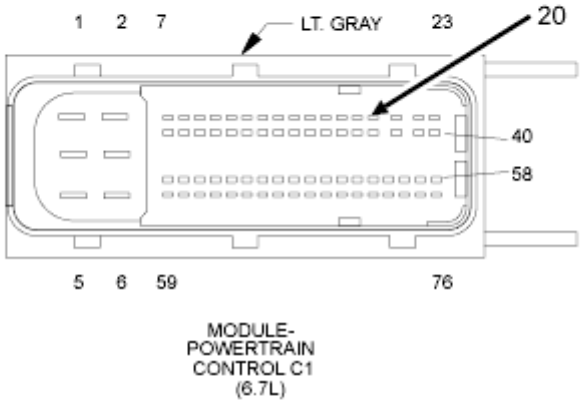

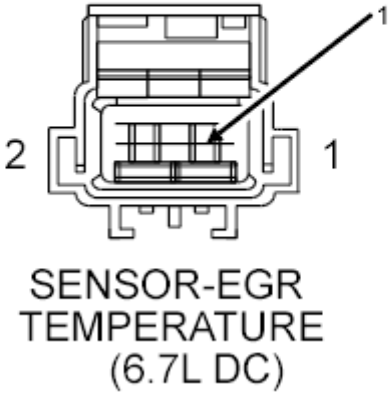

Fig. 160: Checking EGR Outlet Temperature Sensor Return Circuit For An Open Or High Resistance
Courtesy of CHRYSLER GROUP, LLC

1. Measure the resistance of the (K914) EGR Outlet Temperature Sensor Return circuit between the EGR Outlet Temperature Sensor harness connector and the PCM C1 harness connector.

   Is the resistance below 5.0 Ohms?

   Yes

   - Go To 5.

No

- Repair the (K914) EGR Outlet Temperature Sensor Return circuit for an open or high resistance.
- Perform the POWERTRAIN VERIFICATION TEST - 6.7L. Refer to **POWERTRAIN VERIFICATION TEST - 6.7L** .

5. **CHECK THE RESISTANCE OF THE EXHAUST GAS RECIRCULATION OUTLET TEMPERATURE SENSOR**
   1. Measure the resistance between the (K935) EGR Outlet Temperature Sensor Signal circuit and the (K914) EGR Outlet Temperature Sensor Return circuit at the EGR Outlet Temperature Sensor.

      Is the resistance between 200 Ohms and 2.4M Ohms?

      Yes

      - Replace the Powertrain Control Module in accordance with the service information.
      - Perform the POWERTRAIN VERIFICATION TEST - 6.7L. Refer to **POWERTRAIN VERIFICATION TEST - 6.7L** .

      No

      - Replace the EGR Outlet Temperature Sensor in accordance with the service information.
      - Perform the POWERTRAIN VERIFICATION TEST - 6.7L. Refer to **POWERTRAIN VERIFICATION TEST - 6.7L** .

Powertrain Control Module (PCM) - Electrical Diagnostics, 6.7L Diesel - 3500 Cab & Chassis, 4500 & 5500

DIAGNOSIS AND TESTING

P0420-CATALYST EFFICIENCY BELOW THRESHOLD

For a complete wiring diagram, **refer to appropriate SYSTEM WIRING DIAGRAMS article** .

THEORY OF OPERATION

The Aftertreatment Diesel Oxidation Catalyst is designed to react with hydrocarbons in the exhaust stream, this chemical reaction reduces hydrocarbon emission levels and also produces heat. Periodically, the Powertrain Control Module (PCM) will utilize the heat generated by this reaction in the Aftertreatment Diesel Oxidation Catalyst to actively regenerate and clean the Aftertreatment Diesel Particulate Filter. This diagnostic checks that the Aftertreatment Diesel Oxidation Catalyst is present and functioning correctly. The PCM monitors the efficiency of the Aftertreatment Diesel Oxidation Catalyst for DD and DP models through interpretation of data received from the Aftertreatment Diesel Oxidation Catalyst inlet and Aftertreatment Diesel Particulate Filter inlet temperature sensor. For DJ and D2 models the DOC inlet temperature is calculated by the PCM, the monitor checks for a temperature rise across the Aftertreatment Diesel Oxidation Catalyst. The PCM will set the fault if it detects that the Aftertreatment Diesel Oxidation Catalyst is not present in the aftertreatment/exhaust system. The PCM will illuminate the MIL lamp when the monitor runs and fails in two consecutive trips. The PCM will turn off the MIL lamp immediately after the diagnostic runs and passes.

WHEN MONITORED:

This diagnostic runs when the engine is running, and performing an active regeneration of the Aftertreatment Diesel Particulate Filter.

SET CONDITION:

The Powertrain Control Module (PCM) will set the fault if it detects that the Aftertreatment Diesel Oxidation Catalyst is not present in the aftertreatment/exhaust system.

POSSIBLE CAUSES

Possible Causes
AFTERTREATMENT DIESEL OXIDATION CATALYST HAS BEEN REMOVED FROM THE VEHICLE
EXHAUST GAS TEMPERATURE SENSOR 1 AND EXHAUST GAS TEMPERATURE SENSOR 2 HARNESS CONNECTORS REVERSED
AFTERTREATMENT DIESEL OXIDATION CATALYST IS DAMAGED OR NOT FUNCTIONING PROPERLY
AFTERTREATMENT DIESEL OXIDATION CATALYST INLET AND/OR OUTLET TEMPERATURE SENSORS ARE DAMAGED/FAILED

IMPROPER FUELING
WIRE HARNESS

Always perform the Pre-Diagnostic Troubleshooting procedure before proceeding. Refer to PRE-DIAGNOSTIC TROUBLESHOOTING PROCEDURE - 6.7L .

DIAGNOSTIC TEST

1. **OTHER DTCs**
   1. Ignition on, engine not running.
   2. With the scan tool, read DTCs.

      Are any other DTCs Active?

      Yes

      - Repair other DTCs before proceeding.

      No

      - Go To 2.
2. **CHECK FOR THE AFTERTREATMENT DIESEL OXIDATION CATALYST MISSING**
   1. Check the exhaust system to see if the Diesel Oxidation Catalyst has been removed.

      Is the Diesel Oxidation Catalyst present in the system?

      Yes

      - Go To 3.

      No

      - Replace the Diesel Oxidation Catalyst in accordance with the service information
      - Perform the POWERTRAIN VERIFICATION TEST - 6.7L. Refer to **POWERTRAIN VERIFICATION TEST - 6.7L** .
3. **CHECK FOR EXHAUST GAS TEMPERATURE SENSOR 1 AND EXHAUST GAS TEMPERATURE SENSOR 2 HARNESS CONNECTORS REVERSED**

   NOTE: Exhaust Gas Temperature Sensor (EGT) 1 is located at the DOC inlet and Exhaust Gas Temperature Sensor (EGT) 2 is located at the DOC outlet.

   1. Turn the ignition off.
   2. Disconnect the EGT 1 harness connector.
   3. Turn the ignition on.

4. Using the scan tool, monitor the voltage reading of EGT Sensor 1 and EGT Sensor 2.

   Does the Diesel voltage value change to 5.0 volts for EGT Sensor 1 or EGT Sensor 2?

   EGT Sensor 1

   - Go To 4.

   EGT Sensor 2

   - The harness connectors are reversed. Disconnect EGT Sensor 2 and switch the harness connectors to the correct sensors.
   - Perform the POWERTRAIN VERIFICATION TEST - 6.7L. Refer to **POWERTRAIN VERIFICATION TEST - 6.7L** .

4. **CHECK FOR AN EXHAUST LEAK**
   1. Perform the CHECKING THE EXHAUST SYSTEM FOR LEAKS diagnostic procedure. Refer to **DIAGNOSIS AND TESTING, 6.7L** .

      Are leaks found?

      Yes

      - Repair or replace as necessary.
      - Perform the POWERTRAIN VERIFICATION TEST - 6.7L. Refer to **POWERTRAIN VERIFICATION TEST - 6.7L** .

      No

      - Go To 5.

5. **EXHAUST TEMPERATURE**
   1. With the scan tool, read the Exhaust Temperature Sensors to determine the exhaust temperature.

      Is the temperature reading above 225°F?

      Yes

      - Go To 6.

      No

      - Go To 7.

6. **EXHAUST TEMPERATURE SENSORS**
   1. Start the engine.
   2. Raise the engine speed to 2500 RPM for two minutes.

Does the temperature readings of all three Exhaust Temperature Sensors change in value at least 5° F?

Yes

- Go To 8.

No

- Replace the Exhaust Temperature Sensor that did not change in value by at least 5°F or is not updating.
- Perform the POWERTRAIN VERIFICATION TEST - 6.7L. Refer to **POWERTRAIN VERIFICATION TEST - 6.7L** .

7. **EXHAUST TEMPERATURE SENSORS**
   1. Start the engine and allow it to idle for 10 minutes.
   2. With the scan tool, read the values of all three Exhaust Temperature Sensors.

      Do all three temperature sensors read above 150°F and are the values of the temperature sensors updating?

      Yes

      - Go To 8.

      No

      - Replace the Exhaust Temperature Sensor that is not above 150°F or is not updating on the scan tool.
      - Perform the POWERTRAIN VERIFICATION TEST - 6.7L. Refer to **POWERTRAIN VERIFICATION TEST - 6.7L** .
8. **CHECK THE CHARGE AIR COOLING SYSTEM FOR CONTAMINATION DAMAGING THE AFTERTREATMENT DIESEL OXIDATION CATALYST**
   1. Separate the exhaust plumbing from the Turbocharger outlet.
   2. Inspect for signs of oil, coolant or fuel being introduced into the aftertreatment system from the engine or signs of moisture in the Turbocharger exhaust outlet.

      Is contamination found in the turbocharger exhaust outlet?

      Yes

      - Identify and repair the source of the contamination within the engine and replace the Aftertreatment Diesel Oxidation Catalyst after the engine failure has been repaired.
      - Perform the POWERTRAIN VERIFICATION TEST - 6.7L. Refer to **POWERTRAIN VERIFICATION TEST - 6.7L** .

No

- Go To 9.

9. **AFTERTREATMENT DIESEL OXIDATION CATALYST INLET AND/OR OUTLET TEMPERATURE SENSORS**
   1. Remove the Aftertreatment Diesel Oxidation Catalyst and temperature sensors and inspect for damage and presence of face plugging.

      Are the components found to be missing, plugged or damaged during the inspection of the Aftertreatment Diesel Oxidation Catalyst and temperature sensors?

      Yes

      - Replace or repair damaged component(s).
      - Perform the POWERTRAIN VERIFICATION TEST - 6.7L. Refer to **POWERTRAIN VERIFICATION TEST - 6.7L** .

      No

      - Go To 10.

10. **AFTERTREATMENT DIESEL PARTICULATE FILTER**
    1. Remove the exhaust pipe and inspect the Aftertreatment Diesel Particulate Filter.

       Does Aftertreatment Diesel Particulate Filter show evidence of failure?

       Yes

       - Replace the Aftertreatment Diesel Particulate Filter, clean the EGR Valve, and reset the regenerative timers with the scan tool.
       - Perform the POWERTRAIN VERIFICATION TEST - 6.7L. Refer to **POWERTRAIN VERIFICATION TEST - 6.7L** .

       No

       - Perform the INTERMITTENT CONDITION diagnostic procedure. Refer to **INTERMITTENT CONDITION - 6.7L** .

P0461-FUEL LEVEL SENSOR 1 PERFORMANCE

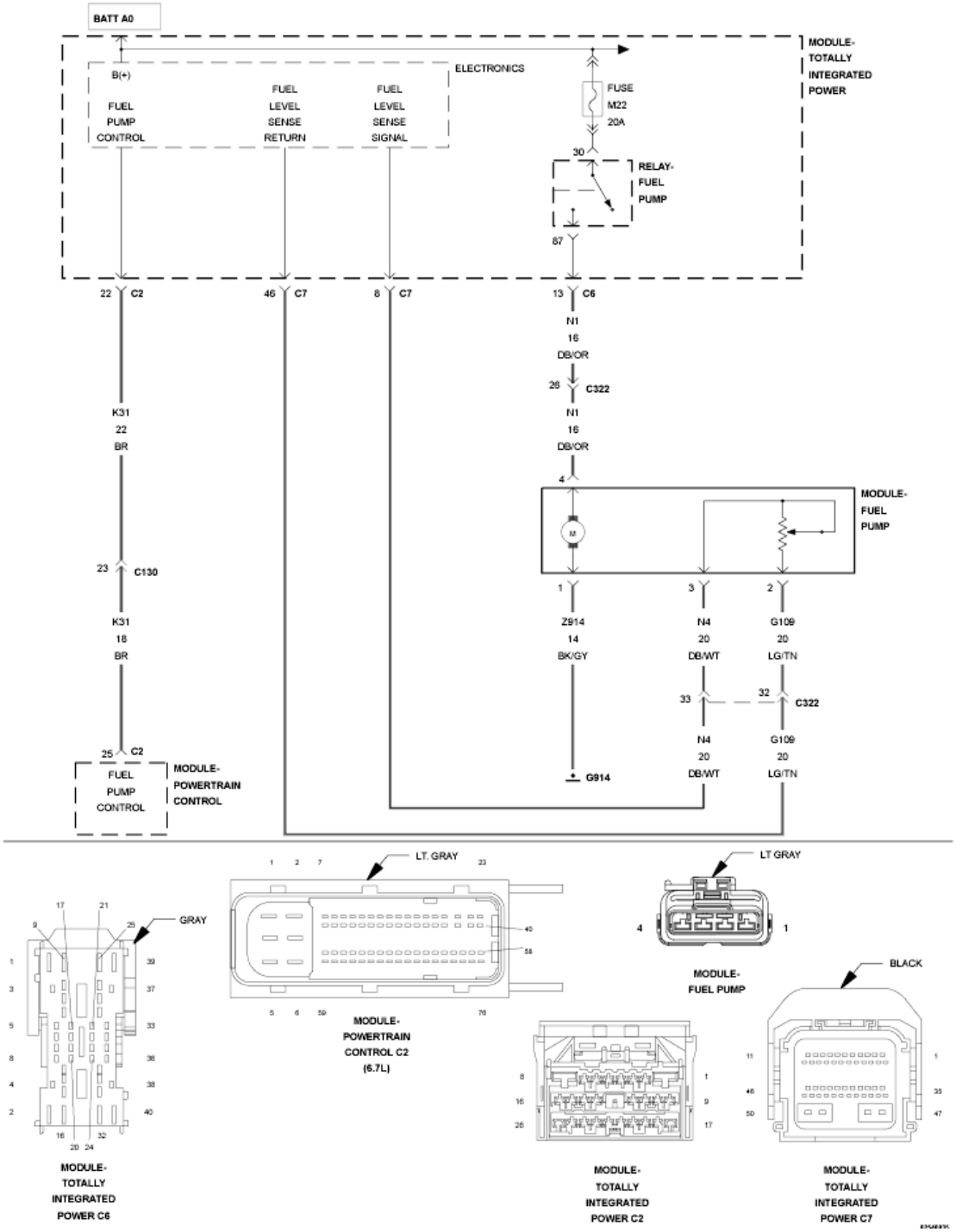

Fig. 1: Fuel Pump Module & TIPM Circuit Schematic
Courtesy of CHRYSLER GROUP, LLC

For a complete wiring diagram, **refer to appropriate SYSTEM WIRING DIAGRAMS article** .

THEORY OF OPERATION

The Fuel Level Sensor is attached to the side of the Fuel Pump Module. The sending unit consists of a float, an

arm and a variable resistor track (card). The fuel transfer pump is also attached to the Fuel Pump Module. A constant 5-Volt signal is supplied to the resistor track of the fuel gauge sending unit. The resistor track is a variable resistor used to vary the voltage signal depending on fuel tank float position. As fuel level increases, the float and arm move up, which decreases voltage. As fuel level decreases, the float and arm move down which increases voltage. When the fuel tank level is measured below 15%, the following fuel system monitors are shut off: P0191 (Fuel Pressure Idle Diagnostic portion of it), and DTCs P0300, P0301, P0302, P0303, P0304, P0305, P0306. The TIPM will illuminate the MIL lamp immediately after this diagnostic runs and fails. The TIPM will turn off the MIL lamp after the diagnostic runs and passes in four consecutive drive cycles.

WHEN MONITORED:

While the engine is running.

SET CONDITION:

Fuel level does not change by a calibrated amount over a calibrated amount of time.

POSSIBLE CAUSES

Possible Causes
EXTERNAL DAMAGE TO FUEL TANK
FUEL LEVEL SENSOR
(N4) FUEL LEVEL SENSOR SIGNAL CIRCUIT OPEN/HIGH RESISTANCE
(G109) FUEL LEVEL SENSOR GROUND CIRCUIT OPEN/HIGH RESISTANCE
INSIDE OF FUEL TANK OBSTRUCTED DAMAGED

Always perform the Pre-Diagnostic Troubleshooting procedure before proceeding. Refer to PRE-DIAGNOSTIC TROUBLESHOOTING PROCEDURE - 6.7L .

DIAGNOSTIC TEST

1. **CHECK FOR EXTERNAL DAMAGE TO FUEL TANK**
    1. Visually inspect the fuel tank for external damage.

       Is the fuel tank damaged from the outside?

       Yes

       - Replace the Fuel Tank in accordance with the Service Information.
       - Perform the POWERTRAIN VERIFICATION TEST - 6.7L. Refer to **POWERTRAIN VERIFICATION TEST - 6.7L** .

       No

       - Go To 2.
2. **CHECK THE (N4) FUEL LEVEL SENSOR SIGNAL CIRCUIT FOR AN OPEN/HIGH**

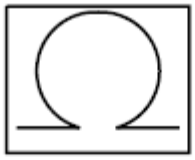

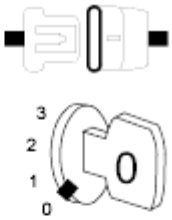

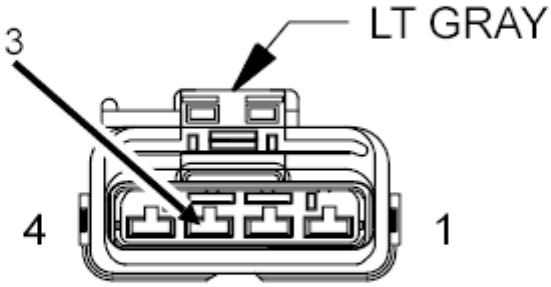

MODULE-
FUEL PUMP

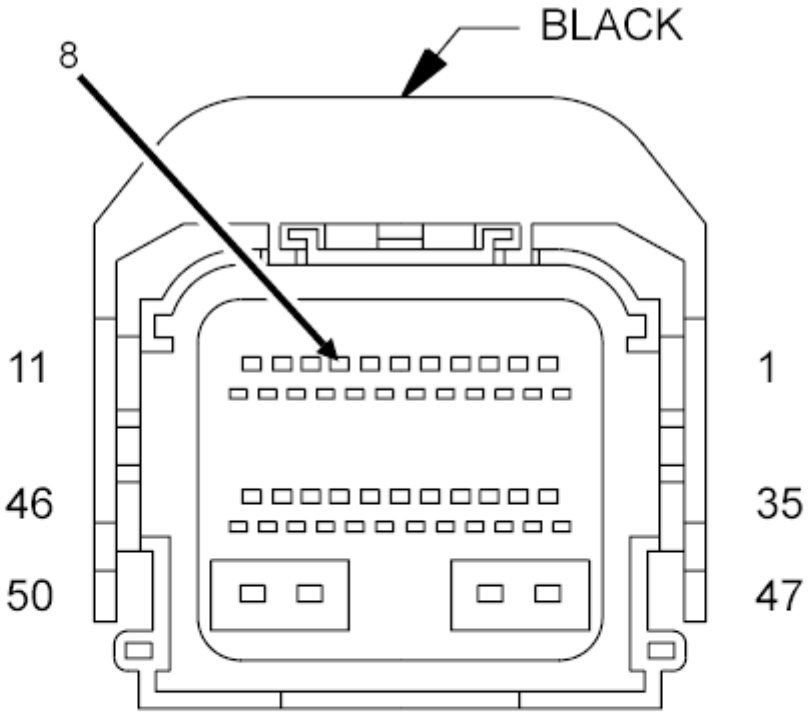

MODULE-
TOTALLY
INTEGRATED
POWER C7

Fig. 2: Checking The Fuel Level Sensor Signal Circuit For An Open Or High Resistance
Courtesy of CHRYSLER GROUP, LLC

1. Turn ignition off.
2. Disconnect the Fuel Pump Module harness connector.
3. Disconnect the TIPM C7 harness connector.
4. Measure the resistance of the (N4) Fuel Level Sensor Signal circuit between the TIPM C7 harness connector and the Fuel Level Sensor harness connector.

   Is the resistance below 5.0 Ohms?

   Yes

   - Go To 3.

   No

   - Repair the (N4) Fuel Level Sensor Signal circuit for an open or high resistance.
   - Perform the POWERTRAIN VERIFICATION TEST - 6.7L. Refer to **POWERTRAIN VERIFICATION TEST - 6.7L** .

3. **CHECK THE (G109) FUEL LEVEL SENSOR RETURN CIRCUIT FOR AN OPEN/HIGH RESISTANCE**

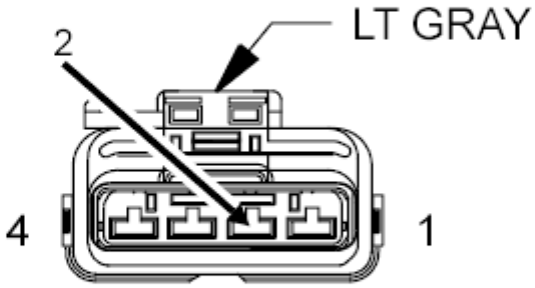

MODULE-
FUEL PUMP

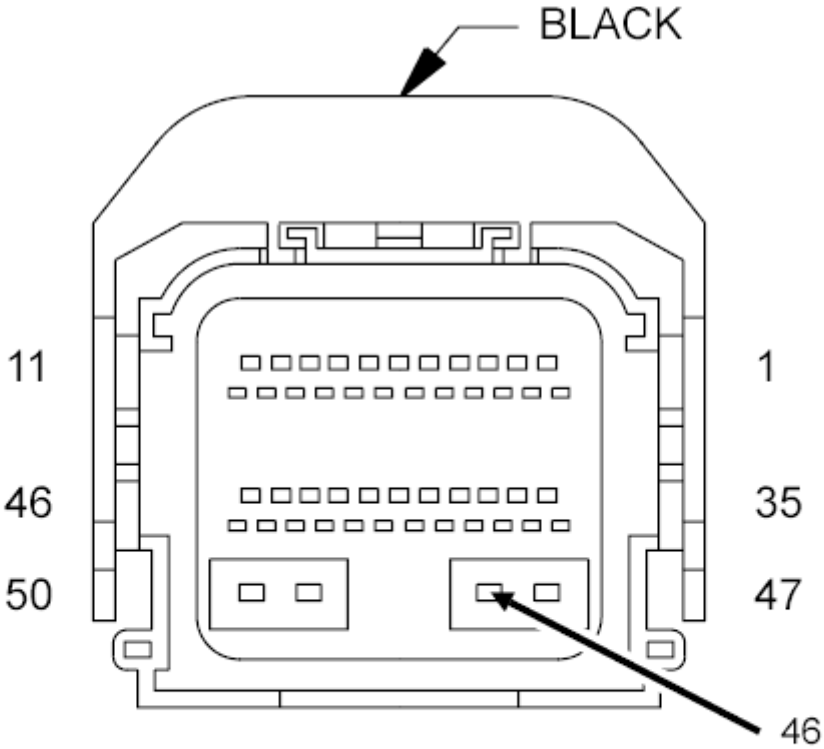

MODULE-
TOTALLY
INTEGRATED
POWER C7

Fig. 3: Checking Fuel Level Sensor Return Circuit For An Open Or High Resistance
Courtesy of CHRYSLER GROUP, LLC

1. Turn the ignition off.
2. Measure the resistance of the (G109) Fuel Level Sensor Return circuit between the TIPM C7 harness connector and the Fuel Pump Module harness connector.

   Is the resistance less than 5.0 Ohms?

   Yes

   - Go To 4.

   No

   - Repair the (Z210) Fuel Level Sensor Return circuit for an open or high resistance.
   - Perform the POWERTRAIN VERIFICATION TEST - 6.7L. Refer to **POWERTRAIN VERIFICATION TEST - 6.7L** .

4. **CHECK THE FUEL LEVEL SENSOR**
   1. Remove the Fuel Level Sensor from the fuel tank.

      Does the fuel level float arm move freely?

      Yes

      - Go To 5.

      No

      - Replace the Fuel Level Sensor in accordance with the Service Information.
      - Perform the POWERTRAIN VERIFICATION TEST - 6.7L. Refer to **POWERTRAIN VERIFICATION TEST - 6.7L** .

5. **CHECK THE FUEL LEVEL SENSOR RESISTANCE**

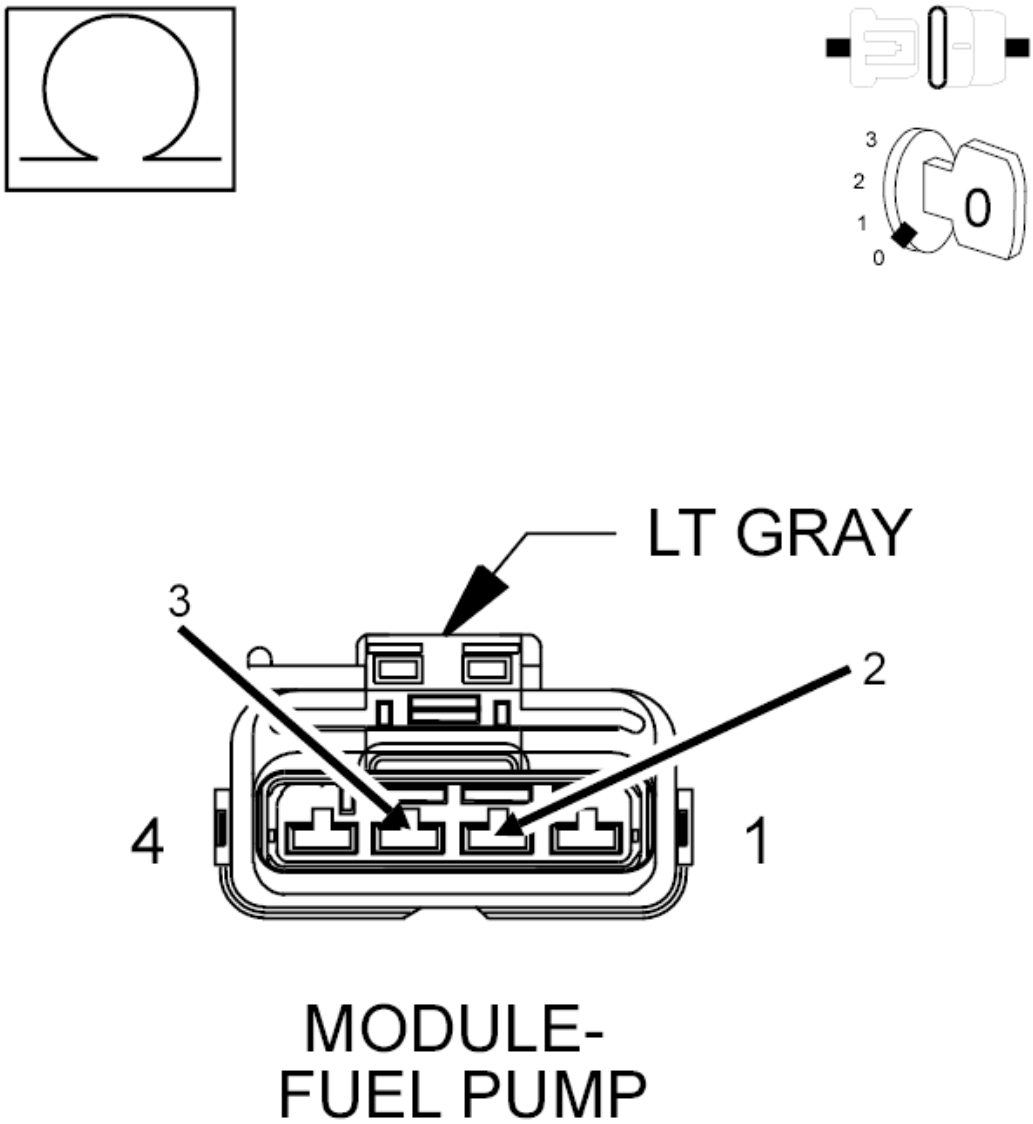

Fig. 4: Checking Fuel Level Sensor Resistance
Courtesy of CHRYSLER GROUP, LLC

1. Measure the resistance across the (N4) Fuel Level Sensor Signal circuit and (G109) Fuel Level Sensor Return circuit at the Fuel Level Sensor while moving the sensor float arm up and down.

   Does the resistance read between approximately 20 and 220 Ohms as you move the sensor arm?

   Yes

   - Go To 6.

No

- Replace the Fuel Level Sensor in accordance with the Service Information.
- Perform the POWERTRAIN VERIFICATION TEST - 6.7L. Refer to **POWERTRAIN VERIFICATION TEST - 6.7L** .

6. **CHECK INSIDE OF FUEL TANK FOR OBSTRUCTION**
   1. Visually inspect the inside of the fuel tank for obstructions.

      Is the inside of the fuel tank damaged or obstructing the Fuel Level Sensor?

      Yes

      - Replace the Fuel Tank in accordance with the Service Information.
      - Perform the POWERTRAIN VERIFICATION TEST - 6.7L. Refer to **POWERTRAIN VERIFICATION TEST - 6.7L** .

      No

      - Test Complete.
      - Perform the POWERTRAIN VERIFICATION TEST - 6.7L. Refer to **POWERTRAIN VERIFICATION TEST - 6.7L** .

P0462-FUEL LEVEL SENSOR 1 CIRCUIT LOW

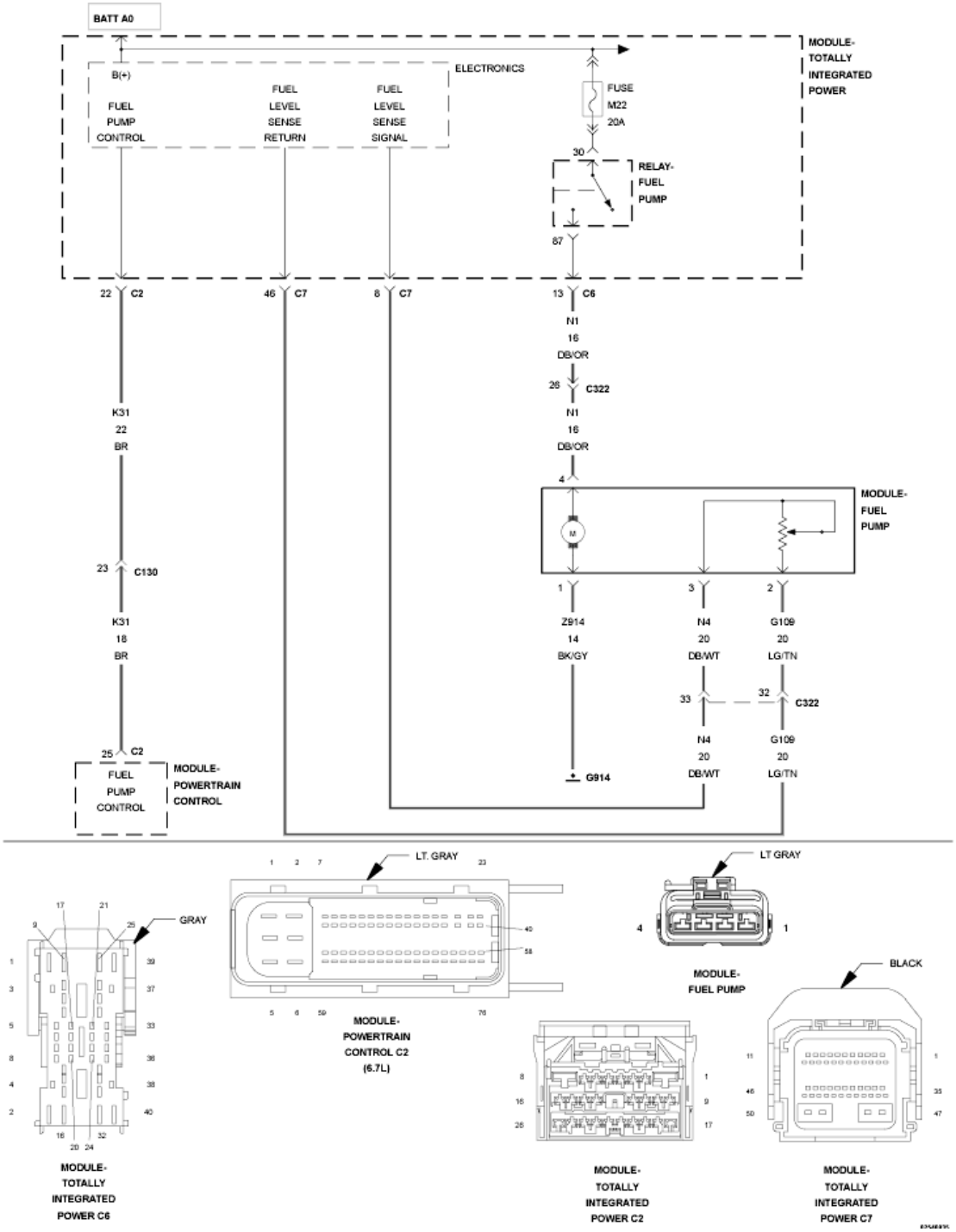

Fig. 5: Fuel Pump Module & TIPM Circuit Schematic
Courtesy of CHRYSLER GROUP, LLC

For a complete wiring diagram, **refer to appropriate SYSTEM WIRING DIAGRAMS article** .

THEORY OF OPERATION

The Fuel Level Sensor is attached to the side of the Fuel Pump Module. The sending unit consists of a float, an

arm and a variable resistor track (card). The fuel transfer pump is also attached to the Fuel Pump Module. A constant 5-Volt signal is supplied to the resistor track of the fuel gauge sending unit. The resistor track is a variable resistor used to vary the voltage signal depending on fuel tank float position. As fuel level increases, the float and arm move up, which decreases voltage. As fuel level decreases, the float and arm move down which increases voltage. When the fuel tank level is measured below 15%, the following fuel system monitors are shut off: P0191 (Fuel Pressure Idle Diagnostic portion of it), and DTCs P0300, P0301, P0302, P0303, P0304, P0305, P0306. The TIPM will illuminate the MIL lamp immediately after this diagnostic runs and fails. The TIPM will turn off the MIL lamp after the diagnostic runs and passes in four consecutive drive cycles.

WHEN MONITORED:

Ignition on and battery voltage above 10.4 Volts.

SET CONDITION:

The signal voltage from the sensor falls below a calibrated value for a calibrated amount of time.

POSSIBLE CAUSES

Possible Causes
FUEL LEVEL SENSOR
(N4) FUEL LEVEL SENSOR SIGNAL CIRCUIT SHORTED TO GROUND
(N4) FUEL LEVEL SENSOR SIGNAL CIRCUIT SHORTED TO THE (G109) FUEL LEVEL SENSOR RETURN CIRCUIT
TIPM

Always perform the Pre-Diagnostic Troubleshooting procedure before proceeding. Refer to PRE-DIAGNOSTIC TROUBLESHOOTING PROCEDURE - 6.7L .

DIAGNOSTIC TEST

1. **ACTIVE DTC**
    1. Ignition on, engine not running.
    2. With the scan tool check for active DTCs.

       Is the DTC active?

       Yes

       - Go To 2.

       No

       - Perform the INTERMITTENT CONDITION diagnostic procedure. Refer to **INTERMITTENT CONDITION - 6.7L** .
2. **CHECK THE FUEL LEVEL SENSOR**

1. Ignition on, engine not running.
2. Disconnect the Fuel Pump Module harness connector.
3. With the scan tool check for DTC P0463.

   Did DTC P0463 set after unplugging sensor?

   Yes

   - Replace the Fuel Level Sensor in accordance with the service information.
   - Perform the POWERTRAIN VERIFICATION TEST - 6.7L. Refer to **POWERTRAIN VERIFICATION TEST - 6.7L** .

   No

   - Go To 3.

3. **CHECK THE (N4) FUEL LEVEL SENSOR SIGNAL CIRCUIT FOR A SHORT TO GROUND**

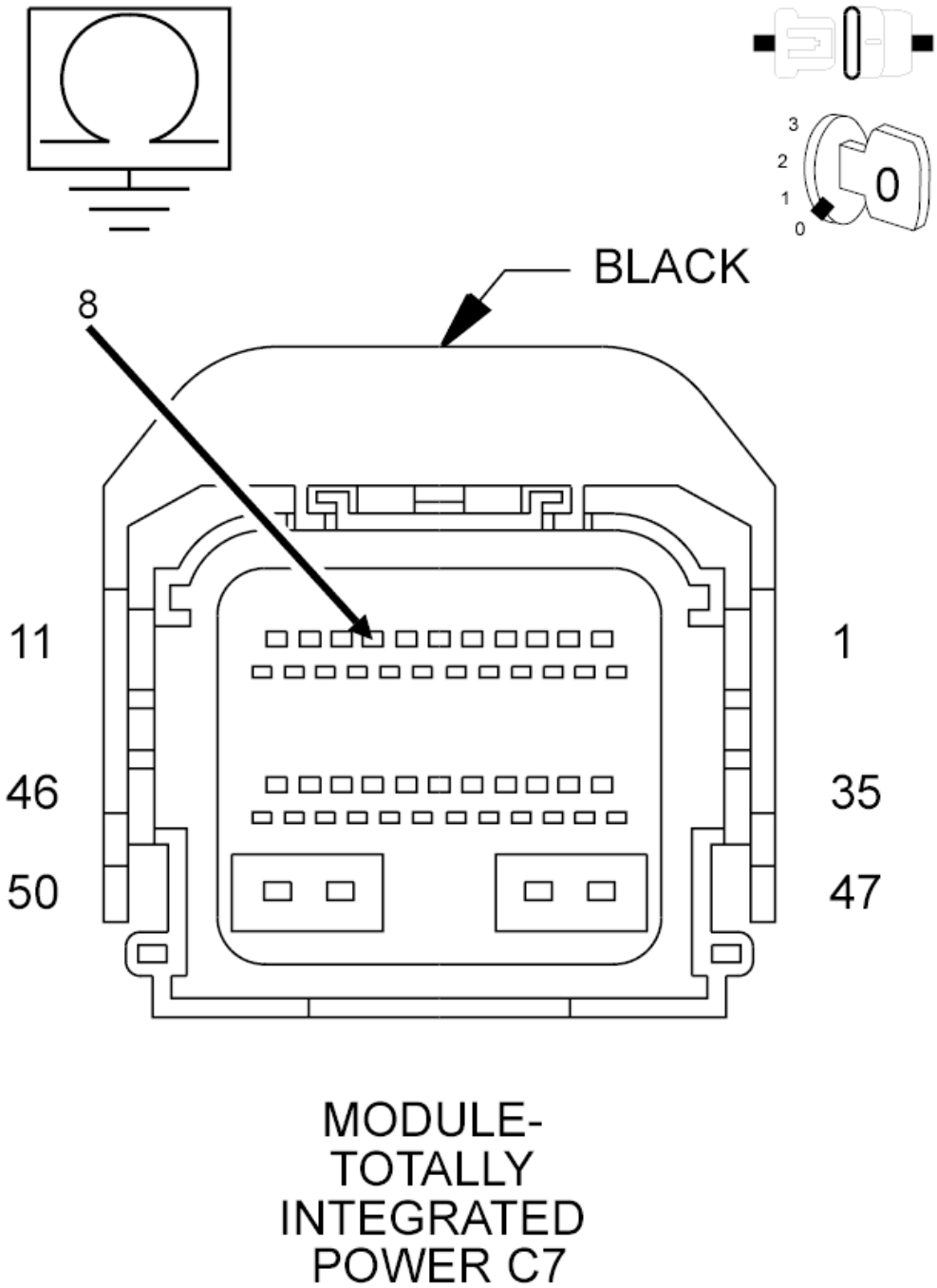

Fig. 6: Checking The Fuel Level Sensor Signal Circuit For A Short To Ground
Courtesy of CHRYSLER GROUP, LLC

1. Turn ignition off.
2. Disconnect the TIPM C7 harness connector.
3. Measure the resistance between ground and the (N4) Fuel Level Sensor Signal circuit at the TIPM C7 harness connector.

Is the resistance below 10k Ohms?

Yes

- Repair the (N4) Fuel Level Sensor Signal circuit for a short to ground.
- Perform the POWERTRAIN VERIFICATION TEST - 6.7L. Refer to **POWERTRAIN VERIFICATION TEST - 6.7L** .

No

- Go To 4.

4. **CHECK FOR THE FUEL LEVEL SENSOR SIGNAL CIRCUIT SHORTED TO THE (G109) FUEL LEVEL SENSOR RETURN CIRCUIT**

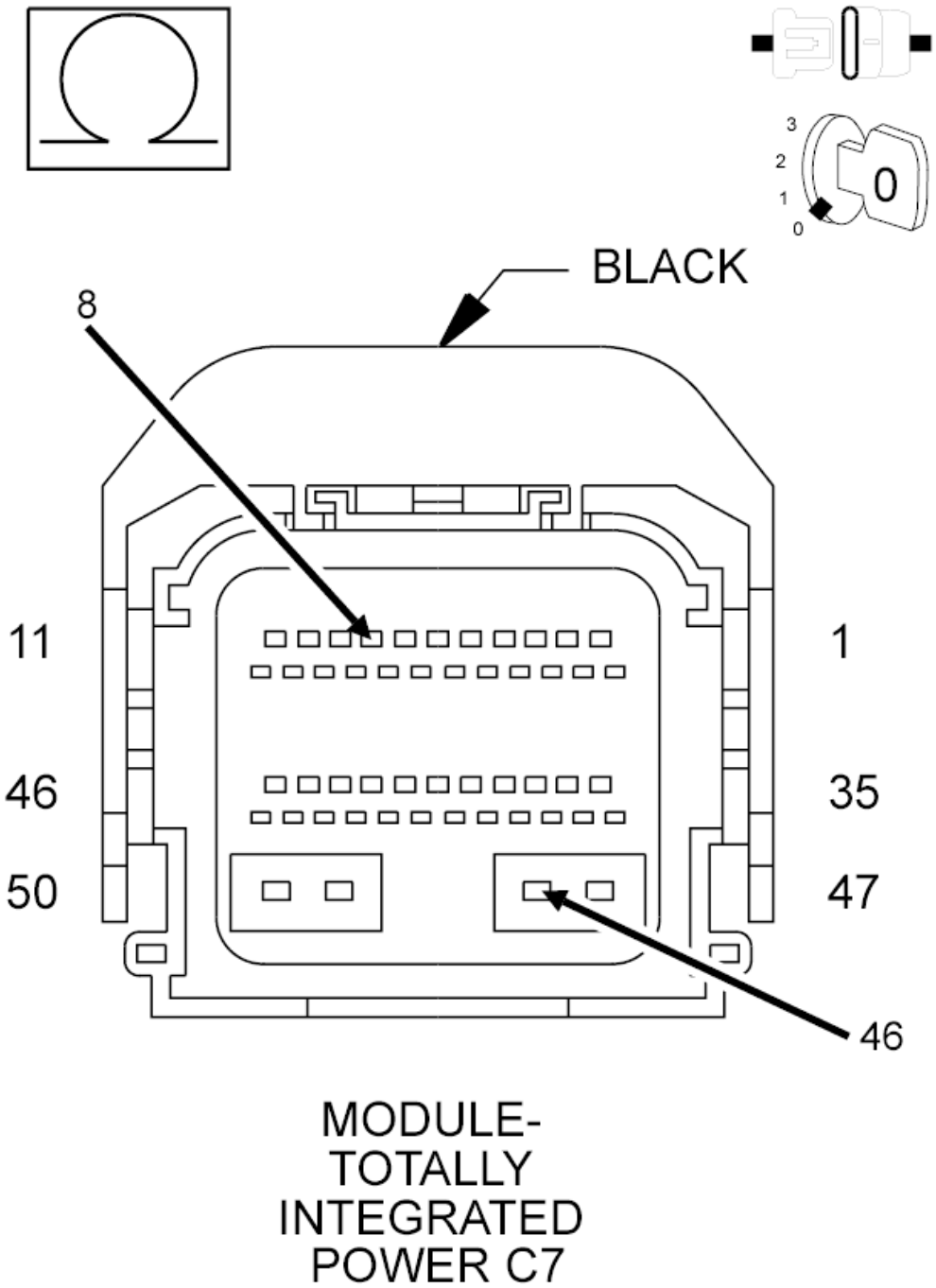

Fig. 7: Check For Fuel Level Sensor Signal Circuit For A Short
Courtesy of CHRYSLER GROUP, LLC

1. Measure the resistance between the (N4) Fuel Level Sensor Signal circuit and the (G109) Fuel Level Sensor Return circuit at the TIPM C7 harness connector.

   Is the resistance below 10k Ohms?

Yes

- Repair the short between the (N4) Fuel Level Sensor Signal circuit and the (G109) Fuel Level Sensor Return circuit.
- Perform the POWERTRAIN VERIFICATION TEST - 6.7L. Refer to **POWERTRAIN VERIFICATION TEST - 6.7L** .

No

- Replace the Totally Integrated Power Module (TIPM) in accordance with the service information.
- Perform the BODY VERIFICATION TEST. Refer to **STANDARD PROCEDURE** .

P0463-FUEL LEVEL SENSOR 1 CIRCUIT HIGH

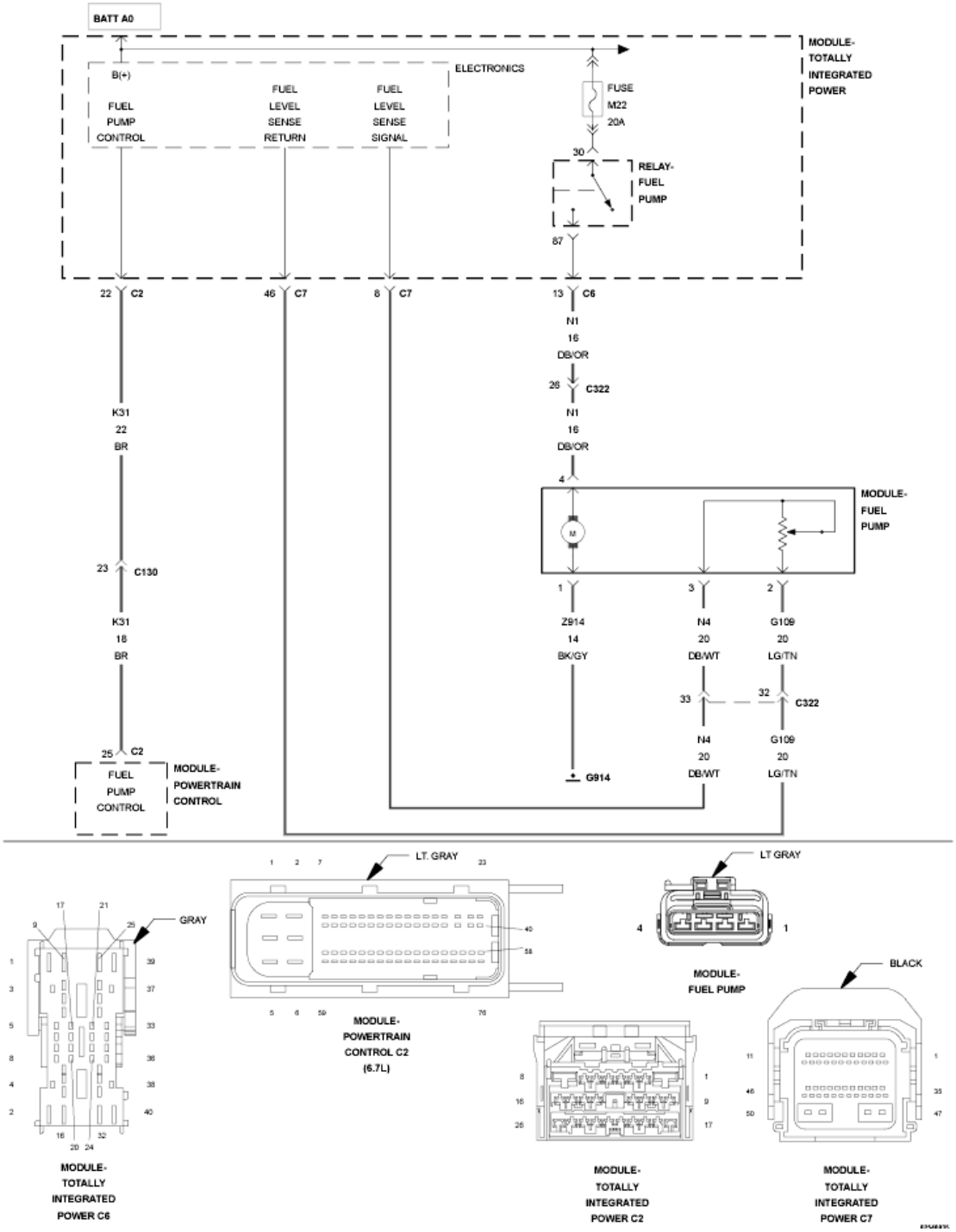

Fig. 8: Fuel Pump Module & TIPM Circuit Schematic
Courtesy of CHRYSLER GROUP, LLC

For a complete wiring diagram, **refer to appropriate SYSTEM WIRING DIAGRAMS article** .

THEORY OF OPERATION

The Fuel Level Sensor is attached to the side of the Fuel Pump Module. The sending unit consists of a float, an

arm and a variable resistor track (card). The fuel transfer pump is also attached to the Fuel Pump Module. A constant 5-Volt signal is supplied to the resistor track of the fuel gauge sending unit. The resistor track is a variable resistor used to vary the voltage signal depending on fuel tank float position. As fuel level increases, the float and arm move up, which decreases voltage. As fuel level decreases, the float and arm move down which increases voltage. When the fuel tank level is measured below 15%, the following fuel system monitors are shut off: P0191 (Fuel Pressure Idle Diagnostic portion of it), and DTCs P0300, P0301, P0302, P0303, P0304, P0305, P0306. The TIPM will illuminate the MIL lamp immediately after this diagnostic runs and fails. The TIPM will turn off the MIL lamp after the diagnostic runs and passes in four consecutive drive cycles.

WHEN MONITORED:

Ignition on and battery voltage above 10.4 Volts.

SET CONDITION:

The signal voltage from the sensor goes above a calibrated value for a calibrated amount of time.

POSSIBLE CAUSES

Possible Causes
FUEL LEVEL SENSOR
(N4) FUEL LEVEL SENSOR SIGNAL CIRCUIT SHORTED TO VOLTAGE
(N4) FUEL LEVEL SENSOR SIGNAL CIRCUIT OPEN/HIGH RESISTANCE
(G109) FUEL LEVEL SENSOR GROUND CIRCUIT OPEN/HIGH RESISTANCE
TOTALLY INTEGRATED POWER MODULE (TIPM)

Always perform the Pre-Diagnostic Troubleshooting procedure before proceeding. Refer to PRE-DIAGNOSTIC TROUBLESHOOTING PROCEDURE - 6.7L .

DIAGNOSTIC TEST

1. **ACTIVE DTC**
    1. Ignition on, engine not running.
    2. With the scan tool check for active DTCs.

       Is the DTC active?

       Yes

       - Go To 2.

       No

       - Perform the INTERMITTENT CONDITION diagnostic procedure. Refer to **INTERMITTENT CONDITION - 6.7L** .
2. **CHECK THE FUEL LEVEL SENSOR**

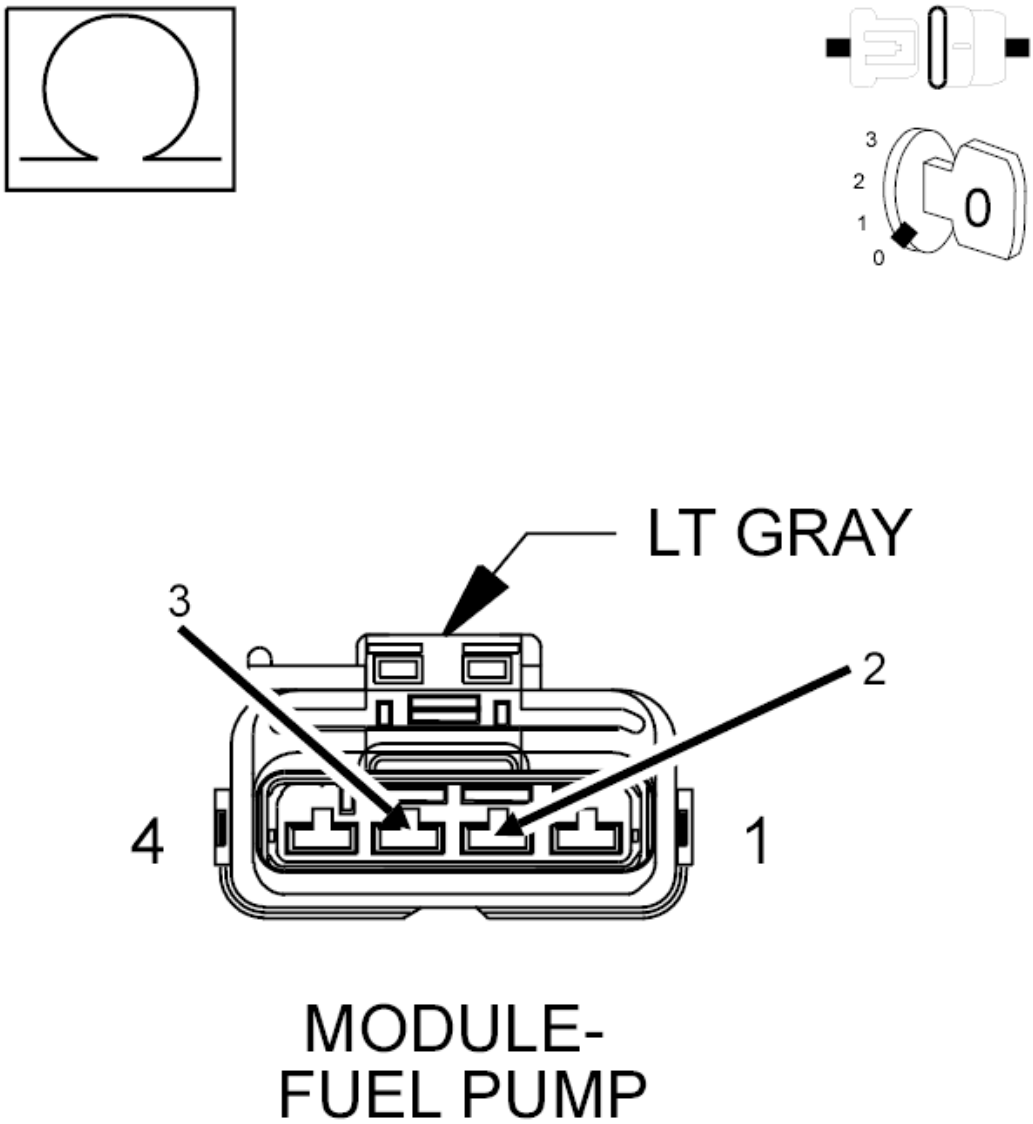

Fig. 9: Checking Fuel Level Sensor Resistance
Courtesy of CHRYSLER GROUP, LLC

1. Turn ignition off.
2. Disconnect the Fuel Level Sensor harness connector.

NOTE: Check connectors - Clean/repair as necessary.

3. Measure the resistance of the Fuel Level Sensor across the (N4) Fuel Level Sensor Signal circuit and (Z210) Fuel Level Sensor Return circuit terminals.

Is the resistance between approximately 20 and 220 Ohms?

Yes

- Go To 3.

No

- Replace the Fuel Level Sensor in accordance with the service information.
- Perform the POWERTRAIN VERIFICATION TEST - 6.7L. Refer to **POWERTRAIN VERIFICATION TEST - 6.7L** .

3. **CHECK THE (N4) FUEL LEVEL SENSOR SIGNAL CIRCUIT FOR A SHORT TO VOLTAGE**

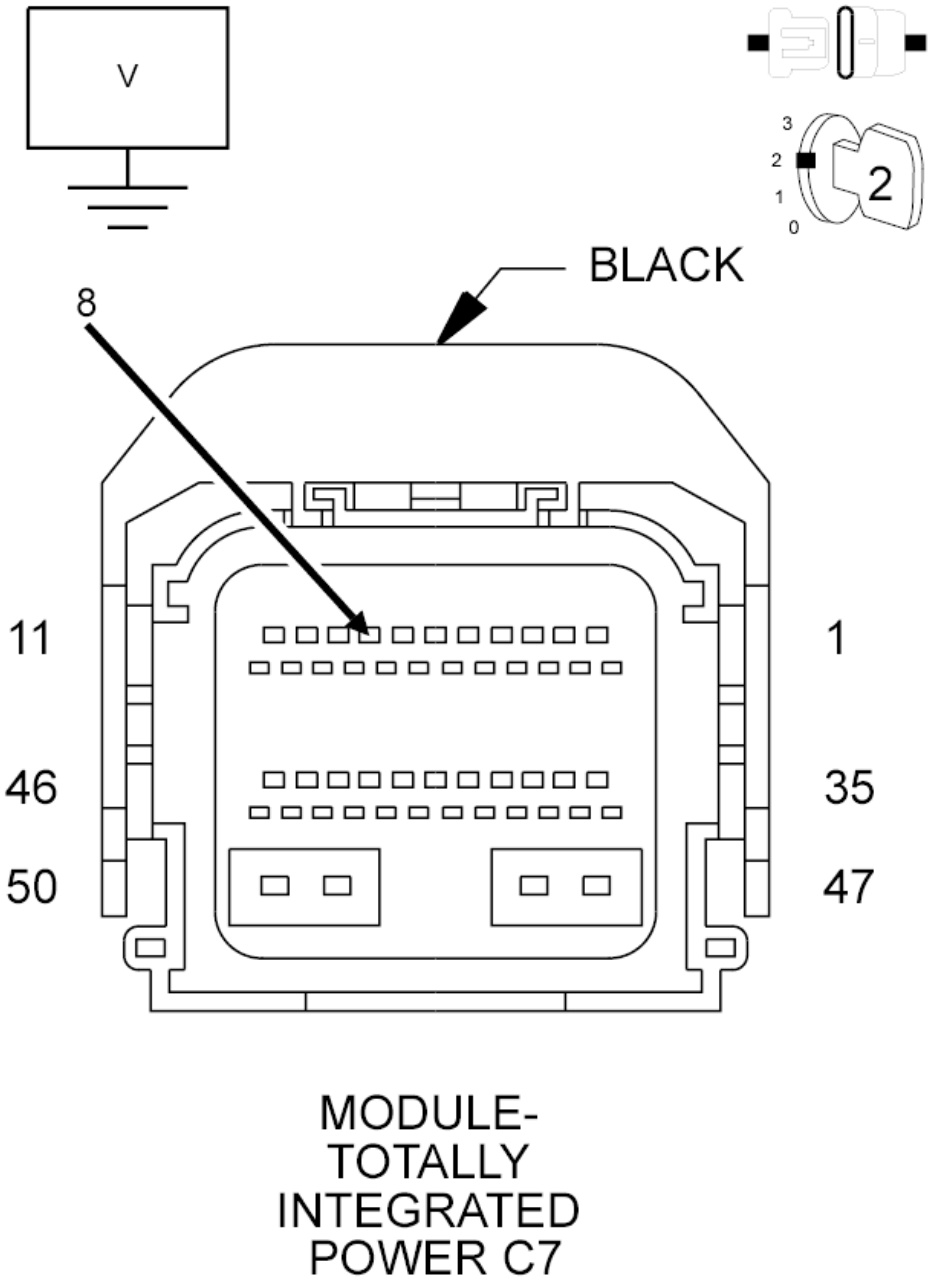

Fig. 10: Checking Fuel Level Sensor Signal Circuit For A Short To Voltage
Courtesy of CHRYSLER GROUP, LLC

1. Disconnect the TIPM C7 harness connector.
2. Turn ignition on.
3. Measure the voltage of the (N4) Fuel Level Sensor Signal circuit at the TIPM C7 harness connector.

   Is there any voltage present?

Yes

- Repair the short to voltage in the (N4) Fuel Level Sensor Signal circuit.
- Perform the POWERTRAIN VERIFICATION TEST - 6.7L. Refer to **POWERTRAIN VERIFICATION TEST - 6.7L** .

No

- Go To 4.

4. **CHECK THE (N4) FUEL LEVEL SENSOR SIGNAL CIRCUIT FOR AN OPEN/HIGH RESISTANCE**

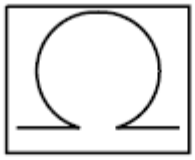

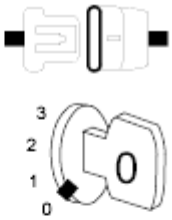

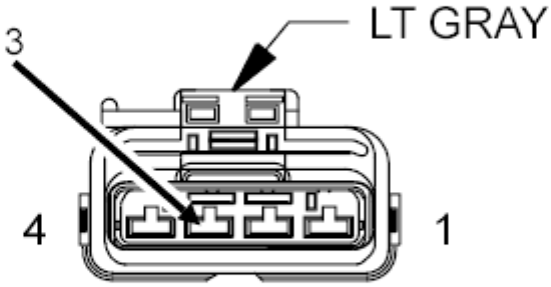

MODULE-
FUEL PUMP

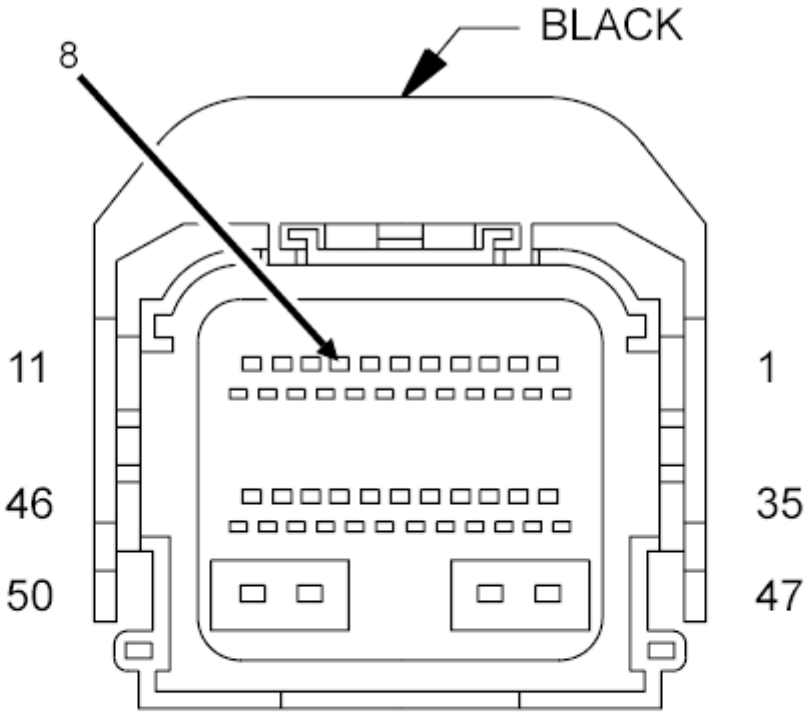

MODULE-
TOTALLY
INTEGRATED
POWER C7

Fig. 11: Checking The Fuel Level Sensor Signal Circuit For An Open Or High Resistance
Courtesy of CHRYSLER GROUP, LLC

1. Turn ignition off.
2. Measure the resistance of the (N4) Fuel Level Sensor Signal circuit between the TIPM C7 harness connector and the Fuel Pump Module harness connector.

   Is the resistance below 5.0 Ohms?

   Yes

   - Go To 5.

   No

   - Repair the (N4) Fuel Level Sensor Signal circuit for an open or high resistance.
   - Perform the POWERTRAIN VERIFICATION TEST - 6.7L. Refer to **POWERTRAIN VERIFICATION TEST - 6.7L** .

5. **CHECK THE (G109) FUEL LEVEL SENSOR RETURN CIRCUIT FOR AN OPEN/HIGH RESISTANCE**

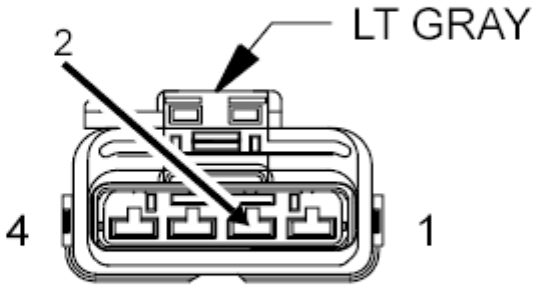

MODULE-
FUEL PUMP

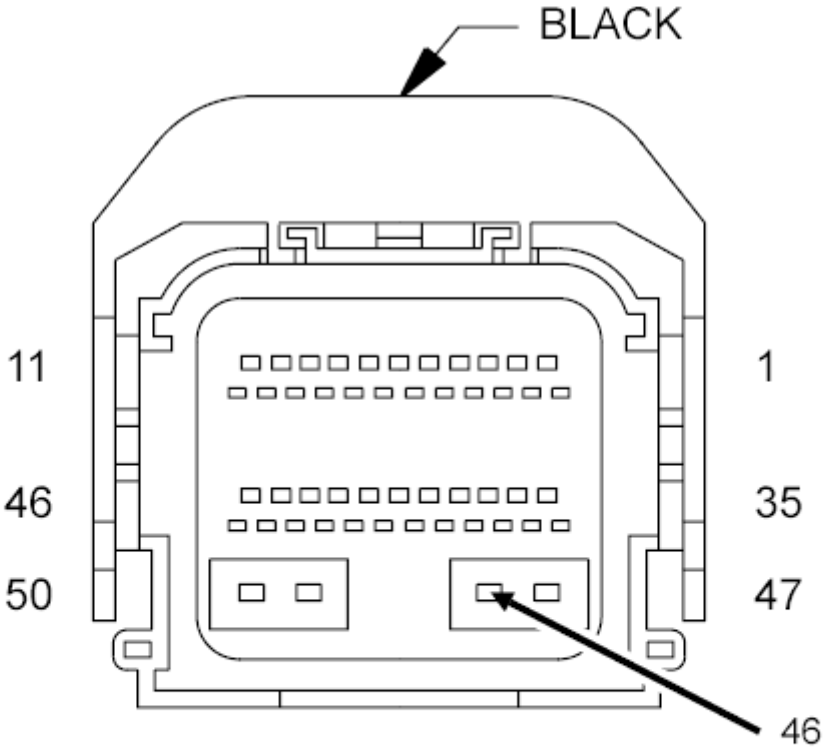

MODULE-
TOTALLY
INTEGRATED
POWER C7

Fig. 12: Checking Fuel Level Sensor Return Circuit For An Open Or High Resistance
Courtesy of CHRYSLER GROUP, LLC

1. Measure the resistance of the (G109) Fuel Level Sensor Return circuit between the TIPM C7 harness connector and the Fuel Pump Module harness connector.

   Is the resistance below 5.0 Ohms?

   Yes

   - Replace the Totally Integrated Power Module (TIPM) in accordance with the service information.
   - Perform the BODY VERIFICATION TEST. Refer to **STANDARD PROCEDURE** .

   No

   - Repair the (G109) Fuel Level Sensor Return circuit for an open or high resistance.
   - Perform the POWERTRAIN VERIFICATION TEST - 6.7L. Refer to **POWERTRAIN VERIFICATION TEST - 6.7L** .

P046C-EGR POSITION SENSOR CIRCUIT PERFORMANCE

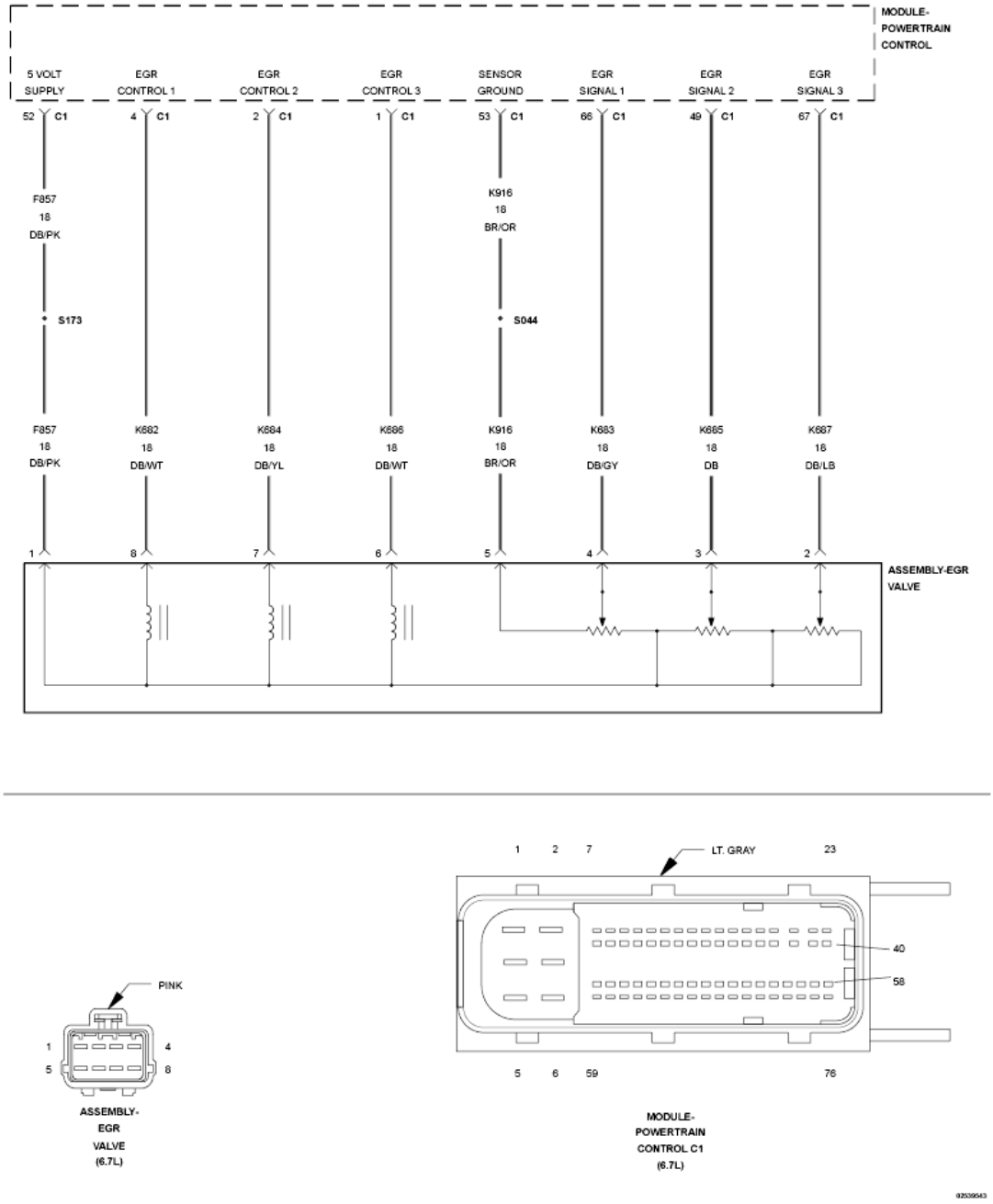

Fig. 13: EGR Valve Assembly Circuit Schematic
Courtesy of CHRYSLER GROUP, LLC

For a complete wiring diagram, **refer to appropriate SYSTEM WIRING DIAGRAMS article** .

THEORY OF OPERATION

The Exhaust Gas Recirculation (EGR) Valve is opened by a motor located on top of the EGR Valve. The EGR Valve is spring loaded closed. The motor electronically opens the valve and is controlled by the Powertrain Control Module (PCM). The PCM monitors three functions of the EGR Valve. The commanded position; actual position; and an acceptable tolerance between the actual and commanded position.If the difference between the

actual and commanded positions exceeds a calibrated threshold over a period of time then the fault will set.If the error is set in two consecutive drive cycles the system will set the MIL Lamp.After the diagnostic runs and passes on four consecutive drive cycles, the MIL Lamp will clear.

WHEN MONITORED:

At key on, and with engine running.

SET CONDITION:

EGR Valve is not able to reach the commanded position over a calibrated period of time.

POSSIBLE CAUSES

Possible Causes
EGR CONTROL CIRCUITS OPEN/HIGH RESISTANCE
EGR POSITION SIGNAL CIRCUITS OPEN/HIGH RESISTANCE
BOOST PRESSURE SENSOR
EGR TEMPERATURE SENSOR
EGR VALVE SOOTED / STICKING
EGR VALVE
POWERTRAIN CONTROL MODULE (PCM)

Always perform the Pre-Diagnostic Troubleshooting procedure before proceeding. Refer to PRE-DIAGNOSTIC TROUBLESHOOTING PROCEDURE - 6.7L .

DIAGNOSTIC TEST

1. **ACTIVE DTC**

NOTE: **If there are any DTCs present for the Boost Pressure Sensor or EGR Temperature Sensor, perform the diagnostics for those DTCs before proceeding with this test procedure.**

1. Turn the ignition on.
2. With the scan tool, record all Freeze frame data.
3. With the scan tool, erase DTCs.
4. Turn the ignition off for 30 seconds.
5. Start the vehicle. It may be necessary to drive vehicle to reset DTC.
6. With the scan tool, read DTCs.

Did the DTC reset?

Yes

- Go To 2.

No

- Perform the INTERMITTENT CONDITION diagnostic procedure. Refer to **INTERMITTENT CONDITION - 6.7L** .

2. **CHECK THE EGR CONTROL CIRCUITS FOR AN OPEN/HIGH RESISTANCE**
   1. Turn the ignition off.
   2. Disconnect the EGR Valve harness connector.
   3. Disconnect the PCM C1 harness connector.
   4. Measure the resistance of the (K682) EGR Control 1 circuit between the EGR Valve harness connector and the PCM harness connector.
   5. Measure the resistance of the (K684) EGR Control 2 circuit between the EGR Valve harness connector and the PCM harness connector.
   6. Measure the resistance of the (K686) EGR Control 3 circuit between the EGR Valve harness connector and the PCM harness connector.

   Is the resistance below 5.0 Ohms for each circuit?

   Yes

   - Go To 3.

   No

   - Repair the open or high resistance in the circuit that measured above 5.0 Ohms.
   - Perform the POWERTRAIN VERIFICATION TEST - 6.7L. Refer to **POWERTRAIN VERIFICATION TEST - 6.7L** .

3. **CHECK THE EGR POSITION SIGNAL CIRCUITS FOR AN OPEN/HIGH RESISTANCE**
   1. Measure the resistance of the (K683) EGR Position Signal 1 circuit circuit between the EGR Valve harness connector and the PCM harness connector.
   2. Measure the resistance of the (K685) EGR Position Signal 2 circuit between the EGR Valve harness connector and the PCM harness connector.
   3. Measure the resistance of the (K687) EGR Position Signal 3 circuit between the EGR Valve harness connector and the PCM harness connector.

   Is the resistance below 5.0 Ohms for each circuit?

   Yes

   - Go To 4.

   No

- Repair the open or high resistance in the circuit that measured above 5.0 Ohms.
- Perform the POWERTRAIN VERIFICATION TEST - 6.7L. Refer to **POWERTRAIN VERIFICATION TEST - 6.7L** .

4. **CLEAN THE EGR VALVE**
    1. Reconnect the PCM C1 harness connector.
    2. Remove and clean the EGR Valve in accordance with the service information. Refer to **VALVE, EXHAUST GAS RECIRCULATION (EGR), 6.7L DIESEL, CLEANING** .
    3. Reconnect the EGR Valve harness connector.
    4. Turn the ignition on.
    5. With the scan tool, erase DTCs.
    6. Turn the ignition off for 75 seconds.
    7. Start the vehicle. It may be necessary to drive vehicle to reset DTC.
    8. With the scan tool, read DTCs.

    Did the DTC return?

    Yes

    - Go To 5.

    No

    - Repair complete.
    - Perform the POWERTRAIN VERIFICATION TEST - 6.7L. Refer to **POWERTRAIN VERIFICATION TEST - 6.7L** .

5. **REPLACE THE EGR VALVE**
    1. Replace the EGR Valve in accordance with the service information. Refer to **VALVE, EXHAUST GAS RECIRCULATION (EGR), 6.7L DIESEL REMOVAL** .
    2. Turn the ignition on.
    3. With the scan tool, erase DTCs.
    4. Turn the ignition off for 75 seconds.
    5. Start the vehicle. It may be necessary to drive vehicle to reset DTC.
    6. With the scan tool, read DTCs.

    Did the DTC return?

    Yes

    - Replace the Powertrain Control Module in accordance with the service information. Refer to **MODULE, POWERTRAIN CONTROL, 6.7L DIESEL, REMOVAL** .
    - Perform the POWERTRAIN VERIFICATION TEST - 6.7L. Refer to **POWERTRAIN VERIFICATION TEST - 6.7L** .

No

- Repair complete.
- Perform the POWERTRAIN VERIFICATION TEST - 6.7L. Refer to **POWERTRAIN VERIFICATION TEST - 6.7L** .

P0471-EXHAUST PRESSURE SENSOR 1 PERFORMANCE

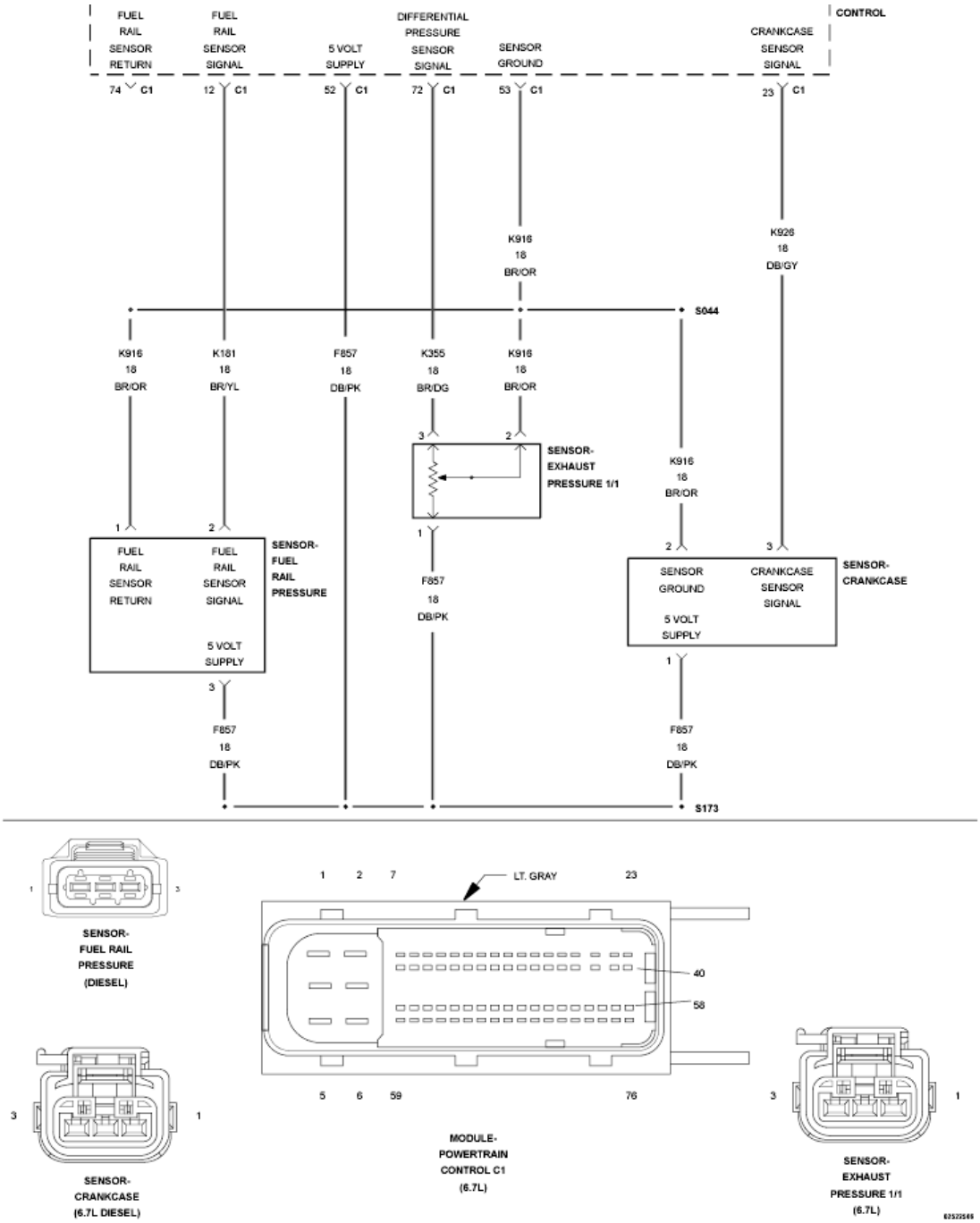

Fig. 14: Fuel Rail Pressure, Exhaust Pressure, & Crankcase Sensor Circuit Schematic

Courtesy of CHRYSLER GROUP, LLC

For a complete wiring diagram, **refer to appropriate SYSTEM WIRING DIAGRAMS article** .

THEORY OF OPERATION

The Exhaust Gas Pressure Sensor is used to measure exhaust gas pressure in the exhaust manifold. The Powertrain Control Module (PCM) provides a 5-Volt supply to the Exhaust Gas Pressure Sensor on the sensor supply circuit. The PCM also provides a ground on the sensor return circuit. The Exhaust Gas Pressure Sensor provides a signal to the PCM on the Exhaust Gas Pressure Sensor Signal circuit. At key on, the readings for the exhaust gas pressure, intake manifold pressure, and ambient air pressure are compared. This fault code occurs if the exhaust gas pressure reading is different from the other two. During normal engine operation EGR position and Boost Pressure Sensor readings are used to calculate an estimated exhaust pressure. If the difference between the estimated and the value read from the Exhaust Gas Pressure Sensor is above a calibrated threshold for a calibrated period of time then an error is recorded. The key-on portion of the rationality will light the MIL immediately after the diagnostic runs and fails. The rationality portion has to fail in two consecutive drive cycles for the MIL to become illuminated. If this fault becomes active the PCM will light the MIL immediately. During this time the PCM uses an estimated exhaust gas pressure. The PCM turns off the MIL when the diagnostic runs and passes in four consecutive drive cycles.

WHEN MONITORED:

Five seconds after key on.

SET CONDITION:

The Exhaust Gas Pressure Sensor reading at key on differs by a calibrated amount of pressure from the Barometric Pressure Sensor and Boost Pressure Sensor or the Exhaust Gas Pressure Sensor reading varies from an estimated value during normal engine operation.

POSSIBLE CAUSES

Possible Causes
DEBRIS PLUGGING THE PRESSURE TUBE
DEBRIS PLUGGING THE PRESSURE SENSOR PORTS ON THE WATER OUTLET CONNECTION
EXHAUST GAS PRESSURE SENSOR

Always perform the Pre-Diagnostic Troubleshooting procedure before proceeding. Refer to PRE-DIAGNOSTIC TROUBLESHOOTING PROCEDURE - 6.7L .

DIAGNOSTIC TEST

1. **CHECK THE EXHAUST GAS PRESSURE SENSOR TUBE AND PRESSURE SENSING PORTS**
    1. Remove the steel tube between the Exhaust Manifold and the Exhaust Gas Pressure Sensor port (located on the water outlet connection).

NOTE: The orifice in the water outlet connection is 2 mm in diameter.

Closely inspect this location as it can accumulate debris.

Is the pressure tube and pressure sensor ports located in the manifold and water outlet connection free from debris?

Yes

- Go To 2.

No

- Clean the tube and pressure sensing ports.
- Go To 2.

2. **CHECK THE THERMOSTAT OUTLET**
   1. Remove the Exhaust Gas Pressure Sensor from the thermostat outlet.

      NOTE: Carefully make sure the sensing end of the Exhaust Gas Pressure Sensor is clear. The Exhaust Gas Pressure Sensor diaphragm can be damaged if a tool is inserted into the end of the sensor. Take care not to damage the sensor.

      Is the outlet and sensor free of debris?

      Yes

      - Go To 3.

      No

      - Remove debris from outlet and wipe the sensor with a clean cloth. Reinstall pressure tube and sensor and retest.
      - Perform the POWERTRAIN VERIFICATION TEST - 6.7L. Refer to **POWERTRAIN VERIFICATION TEST - 6.7L** .

3. **CHECK THE AIR INLET/CHARGE AIR/EXHAUST GAS RECIRCULATION FOR LEAKS**
   1. Check vehicle/engine for leaks of inlet air (Air Filter to Turbocharger), Charge Air (Turbocharger to Intake Manifold), or EGR gases (Exhaust Manifold to Intake Manifold). Refer to **DIAGNOSIS AND TESTING, 6.7L** .

      Were there any leaks detected?

      Yes

      - Repair leak condition.
      - Perform the POWERTRAIN VERIFICATION TEST - 6.7L. Refer to **POWERTRAIN VERIFICATION TEST - 6.7L** .

No

- Go To 4.

4. **CHECK THE EXHAUST GAS PRESSURE SENSOR**
   1. Turn ignition switch on.
   2. Wait five seconds after ignition switch is turned on.
   3. With the scan tool, read DTCs.

   Is P0471 stored?

   Yes

   - Go To 5.

   No

   - Replace the Exhaust Gas Pressure Sensor in accordance with the service information.
   - Perform the POWERTRAIN VERIFICATION TEST - 6.7L. Refer to **POWERTRAIN VERIFICATION TEST - 6.7L** .

5. **CHECK THE EXHAUST GAS PRESSURE SENSOR OPERATION**
   1. With the scan tool, erase DTCs.
   2. Start the engine and let it idle for one minute.
   3. With the scan tool, monitor the Exhaust Gas Pressure Sensor reading.

   Does the value fluctuate slightly, indicating the sensor is not stuck?

   Yes

   - Repair complete.
   - Perform the POWERTRAIN VERIFICATION TEST - 6.7L. Refer to **POWERTRAIN VERIFICATION TEST - 6.7L** .

   No

   - Replace the Exhaust Gas Pressure Sensor.
   - Perform the POWERTRAIN VERIFICATION TEST - 6.7L. Refer to **POWERTRAIN VERIFICATION TEST - 6.7L** .

P0472-EXHAUST PRESSURE SENSOR 1 LOW

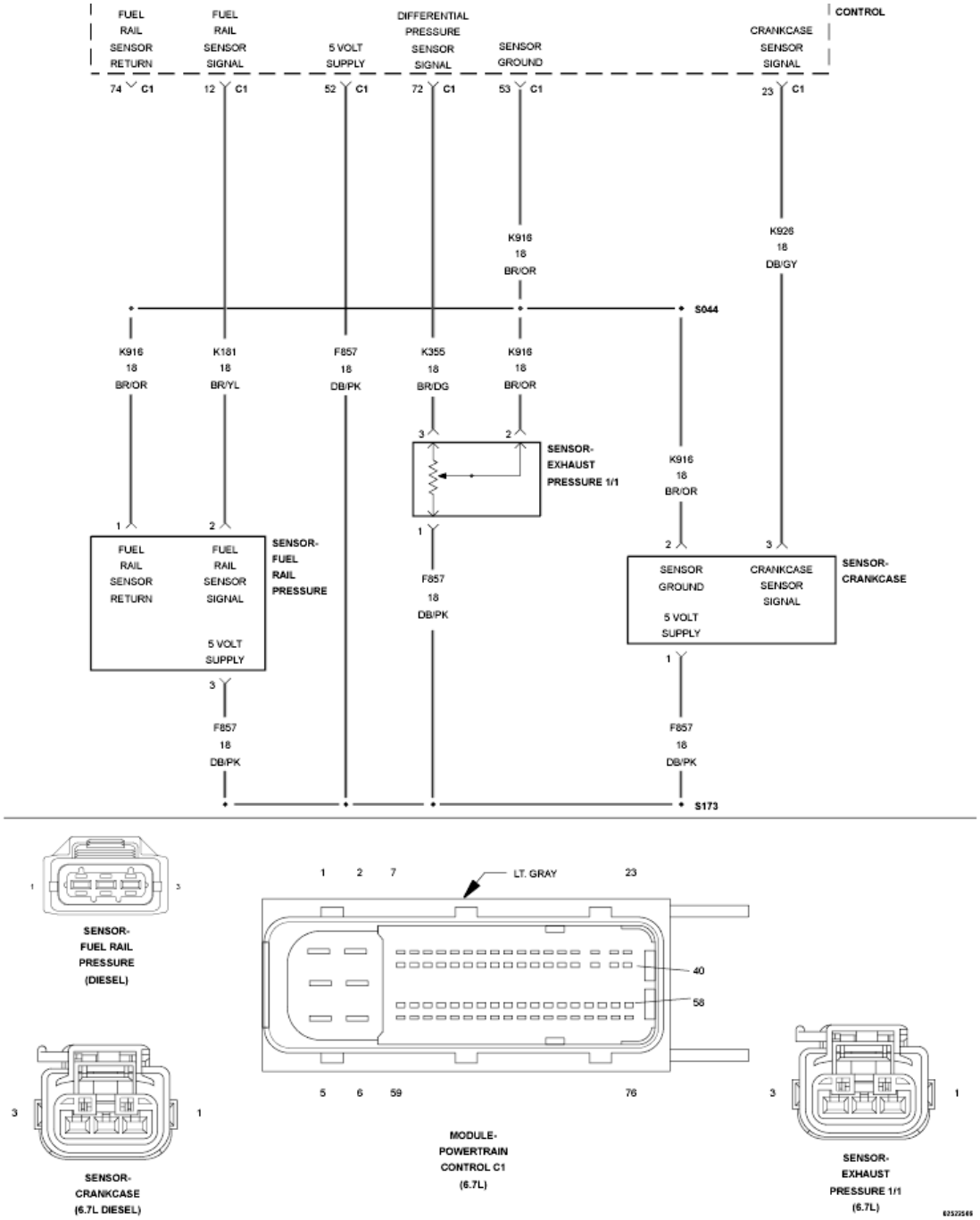

Fig. 15: Fuel Rail Pressure, Exhaust Pressure, & Crankcase Sensor Circuit Schematic
Courtesy of CHRYSLER GROUP, LLC

For a complete wiring diagram, **refer to appropriate SYSTEM WIRING DIAGRAMS article** .

THEORY OF OPERATION

The Exhaust Gas Pressure Sensor is used to measure exhaust gas pressure in the exhaust manifold. The Powertrain Control Module (PCM) provides a 5-Volt supply to the Exhaust Gas Pressure Sensor on the sensor supply circuit. The PCM also provides a ground on the sensor return circuit. The Exhaust Gas Pressure Sensor

provides a signal to the PCM on the Exhaust Gas Pressure Sensor Signal circuit. At key on, the readings for the exhaust gas pressure, intake manifold pressure and ambient air pressure are compared. This fault code occurs if the exhaust gas pressure reading is different from the other two. During normal engine operation EGR position and Boost Pressure Sensor readings are used to calculate an estimated exhaust pressure. If the difference between the estimated and the value read from the Exhaust Gas Pressure Sensor is above a calibrated threshold for a calibrated period of time then an error is recorded. The key-on portion of the rationality will light the MIL immediately after the diagnostic runs and fails. The rationality portion has to fail in two consecutive drive cycles for the MIL to become illuminated. If this fault becomes active the PCM will light the MIL light immediately. During this time the PCM uses an estimated exhaust gas pressure. The PCM turns off the MIL when the diagnostic runs and passes in four consecutive drive cycles.

WHEN MONITORED:

Ignition on, engine not running.

SET CONDITION:

The circuit voltage to the Powertrain Control Module (PCM) falls below 0.25 of a Volt for five seconds.

POSSIBLE CAUSES

Possible Causes
(F857) 5-VOLT SUPPLY CIRCUIT OPEN/HIGH RESISTANCE
(F857) 5-VOLT SUPPLY CIRCUIT SHORTED TO GROUND
(K355) EXHAUST PRESSURE SENSOR SIGNAL CIRCUIT OPEN/HIGH RESISTANCE
(K355) EXHAUST PRESSURE SENSOR SIGNAL CIRCUIT SHORTED TO GROUND
(K355) EXHAUST PRESSURE SENSOR SIGNAL CIRCUIT SHORTED TO THE (K916) SENSOR GROUND CIRCUIT
EXHAUST PRESSURE SENSOR
POWERTRAIN CONTROL MODULE (PCM)

Always perform the Pre-Diagnostic Troubleshooting procedure before proceeding. Refer to PRE-DIAGNOSTIC TROUBLESHOOTING PROCEDURE - 6.7L .

DIAGNOSTIC TEST

1. **ACTIVE DTC**

NOTE: **If there are any 5-Volt supply DTCs present, repair those DTCs before proceeding.**

1. Turn the ignition on.
2. With the scan tool, record all Freeze frame data.
3. With the scan tool, erase DTCs.
4. Turn the ignition off for 75 seconds.

5. Turn the ignition on.
6. With the scan tool, read DTCs.

   Did the DTC return?

   Yes

   - Go To 2.

   No

   - Perform the INTERMITTENT CONDITION diagnostic procedure. Refer to **INTERMITTENT CONDITION - 6.7L** .

2. **CHECK THE (K355) EXHAUST PRESSURE SENSOR SIGNAL CIRCUIT FOR AN OPEN/HIGH RESISTANCE**

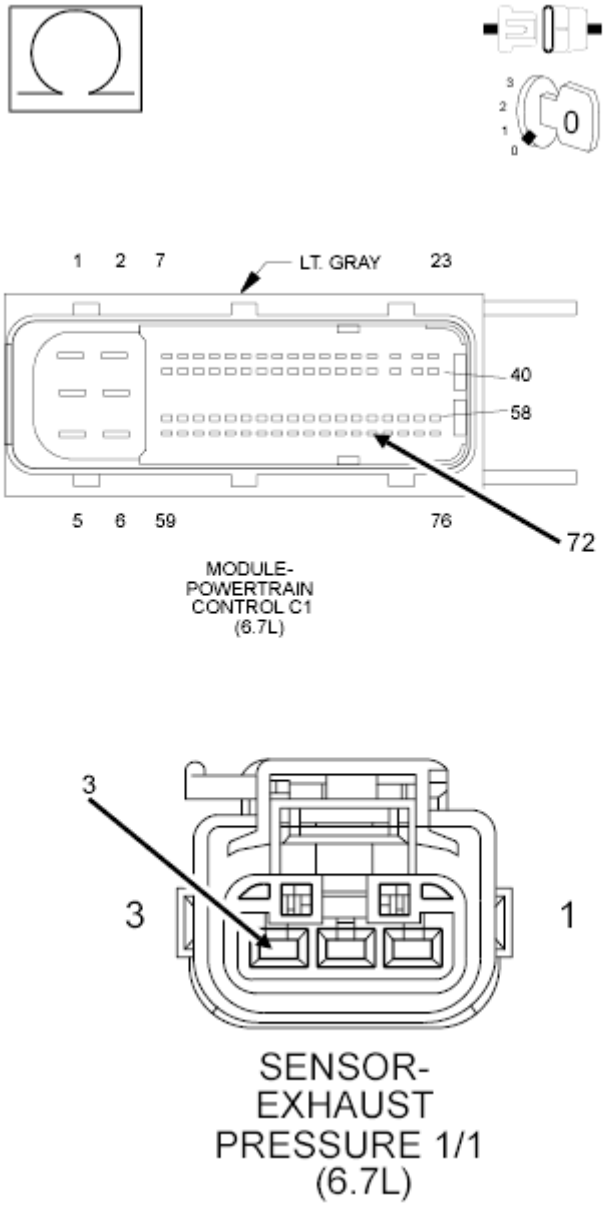

Fig. 16: Checking Exhaust Pressure Sensor Signal Circuit For An Open Or High Resistance
Courtesy of CHRYSLER GROUP, LLC

1. Turn the ignition off.
2. Disconnect the Exhaust Pressure Sensor harness connector.
3. Disconnect the PCM C1 harness connector.
4. Measure the resistance of the (K355) Exhaust Pressure Sensor Signal circuit between the Exhaust Pressure Sensor harness connector and the PCM C1 harness connector.

   Is the resistance below 5.0 Ohms?

Yes

- Go To 3.

No

- Repair the (K355) Exhaust Pressure Sensor Signal circuit for an open or high resistance.
- Perform the POWERTRAIN VERIFICATION TEST - 6.7L. Refer to **POWERTRAIN VERIFICATION TEST - 6.7L** .

3. **CHECK THE (K355) EXHAUST PRESSURE SENSOR SIGNAL CIRCUIT FOR A SHORT TO GROUND**

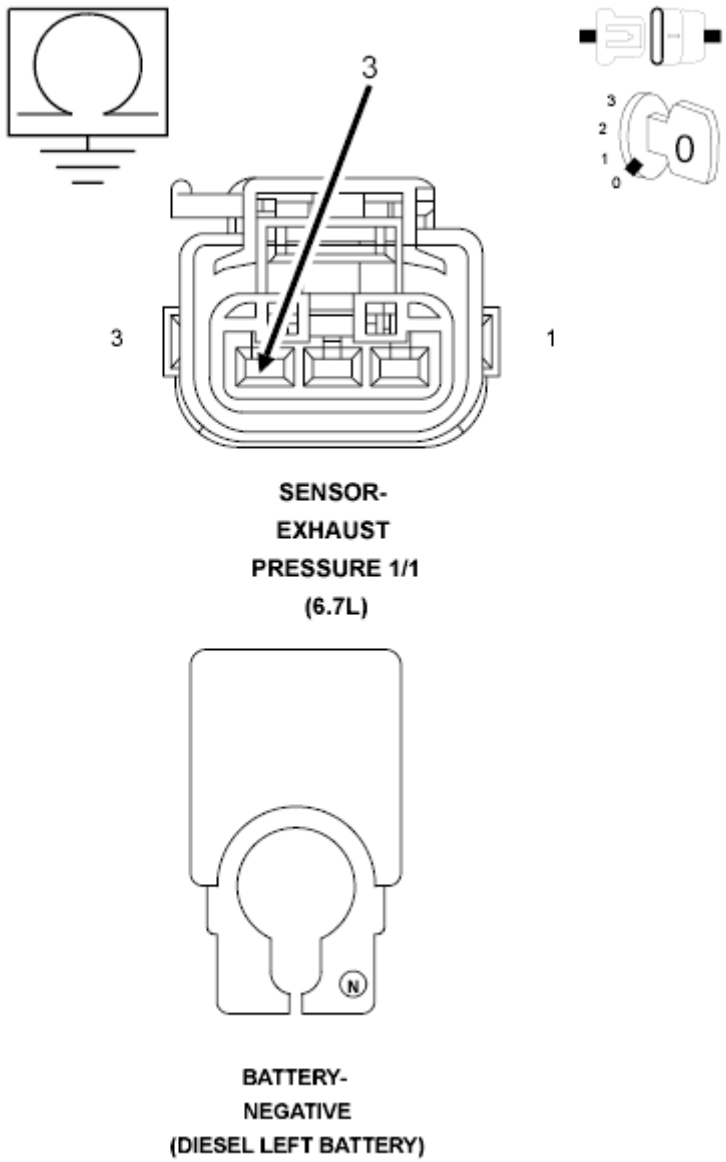

183134

Fig. 17: Exhaust Pressure Sensor 1 Connector Pin ID & Negative Battery Cable
Courtesy of CHRYSLER GROUP, LLC

1. Measure the resistance between ground and the (K355) Exhaust Pressure Sensor Signal circuit at the Exhaust Pressure Sensor harness connector.

   Is the resistance below 10k Ohms?

   Yes

   - Repair the (K355) Exhaust Pressure Sensor Signal circuit for a short to ground.
   - Perform the POWERTRAIN VERIFICATION TEST - 6.7L. Refer to **POWERTRAIN VERIFICATION TEST - 6.7L** .

   No

   - Go To 4.

4. **CHECK FOR THE (K355) EXHAUST PRESSURE SENSOR SIGNAL CIRCUIT SHORTED TO THE (K916) SENSOR GROUND CIRCUIT**

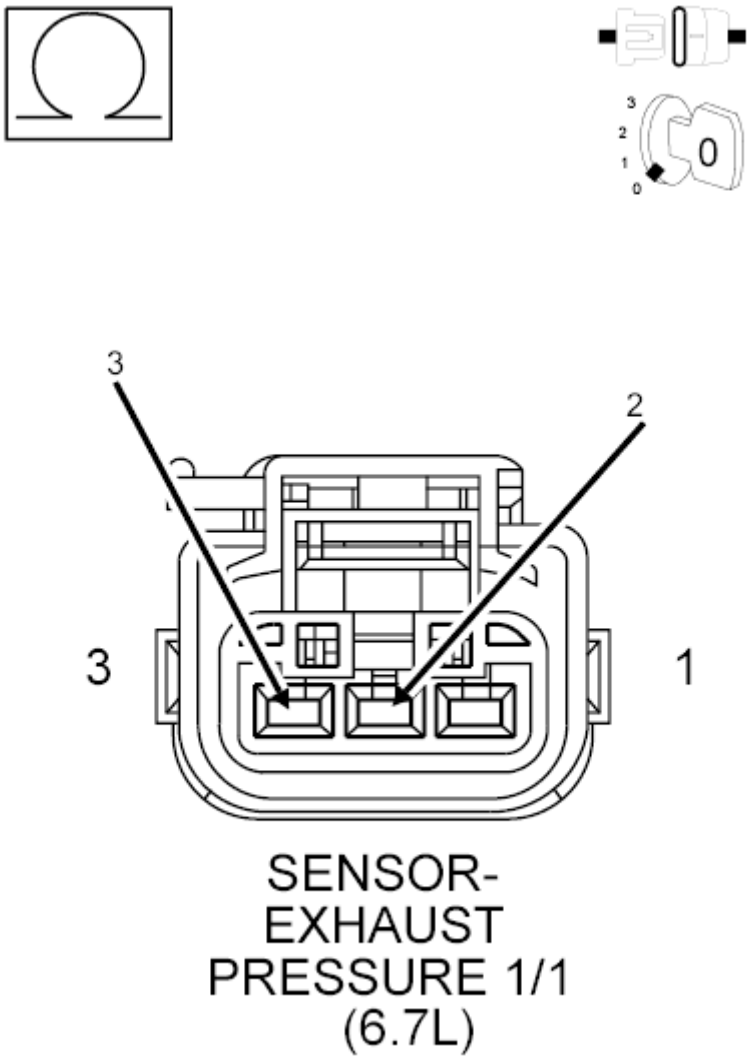

Fig. 18: Checking For Exhaust Pressure Sensor Signal Circuit Shorted To Sensor Ground Circuit
Courtesy of CHRYSLER GROUP, LLC

1. Measure the resistance between the (K355) Exhaust Pressure Sensor Signal circuit and the (K916) Sensor Ground circuit at the Exhaust Pressure Sensor harness connector.

   Is the resistance below 10k Ohms?

   Yes

   - Repair the short between the (K355) Exhaust Pressure Sensor Signal circuit and the (K916) Sensor Ground circuit.
   - Perform the POWERTRAIN VERIFICATION TEST - 6.7L. Refer to **POWERTRAIN VERIFICATION TEST - 6.7L** .

No

- Go To 5.

5. **CHECK THE EXHAUST PRESSURE SENSOR**

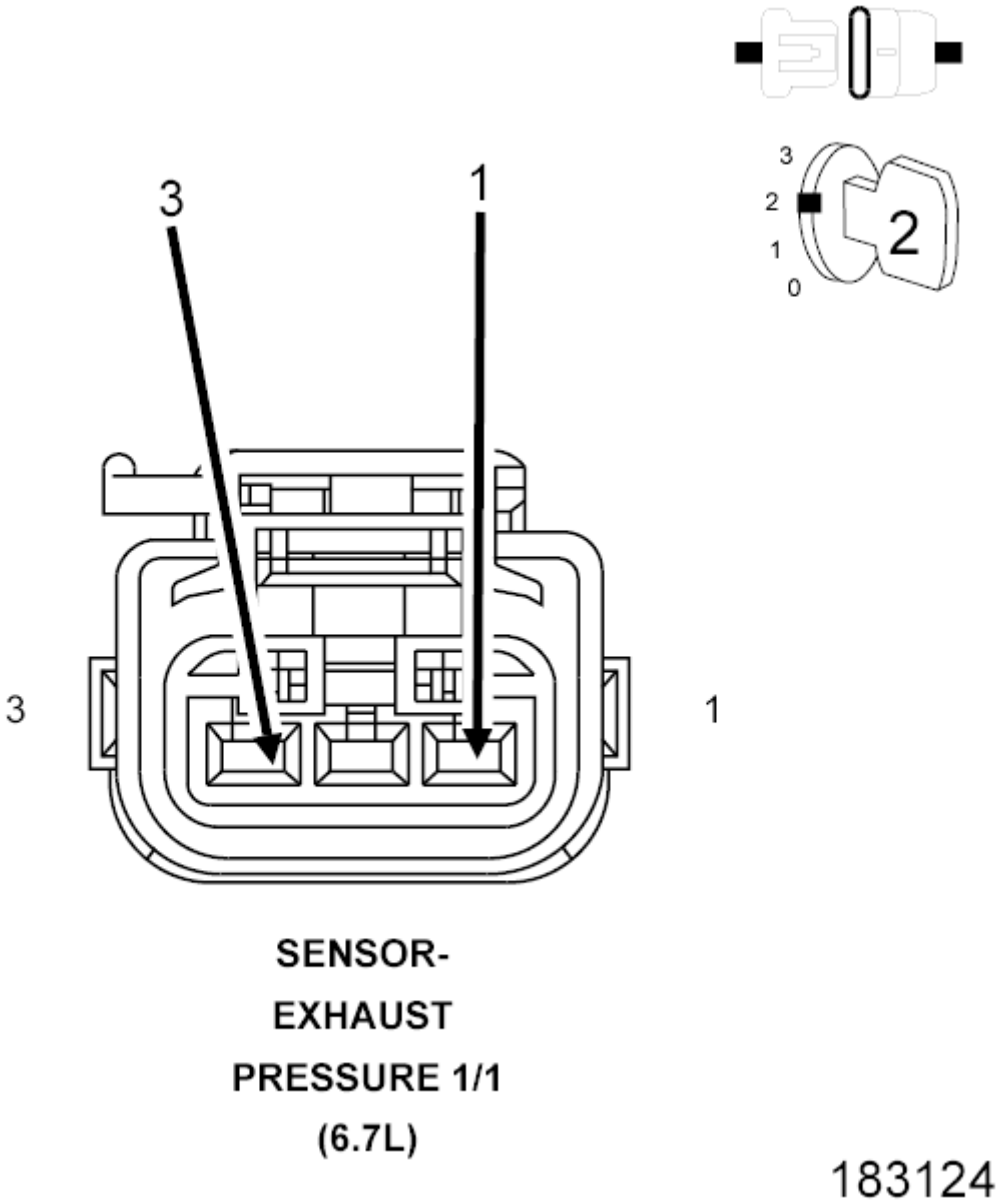

Fig. 19: Exhaust Pressure Sensor Harness Connector
Courtesy of CHRYSLER GROUP, LLC

1. Reconnect the PCM C1 harness connector.
2. Turn the ignition on.
3. While monitoring scan tool, connect a jumper across the (F857) 5-Volt supply circuit and the (K355) Exhaust Pressure Sensor Signal circuit at the Exhaust Pressure Sensor harness connector.

Did the scan tool display DTC P0473 active?

Yes

- Replace the Exhaust Pressure Sensor in accordance with the service information.
- Perform the POWERTRAIN VERIFICATION TEST - 6.7L. Refer to **POWERTRAIN VERIFICATION TEST - 6.7L** .

No

- Replace the Powertrain Control Module in accordance with the Service Information.
- Perform the POWERTRAIN VERIFICATION TEST - 6.7L. Refer to **POWERTRAIN VERIFICATION TEST - 6.7L** .

P0473-EXHAUST PRESSURE SENSOR 1 HIGH

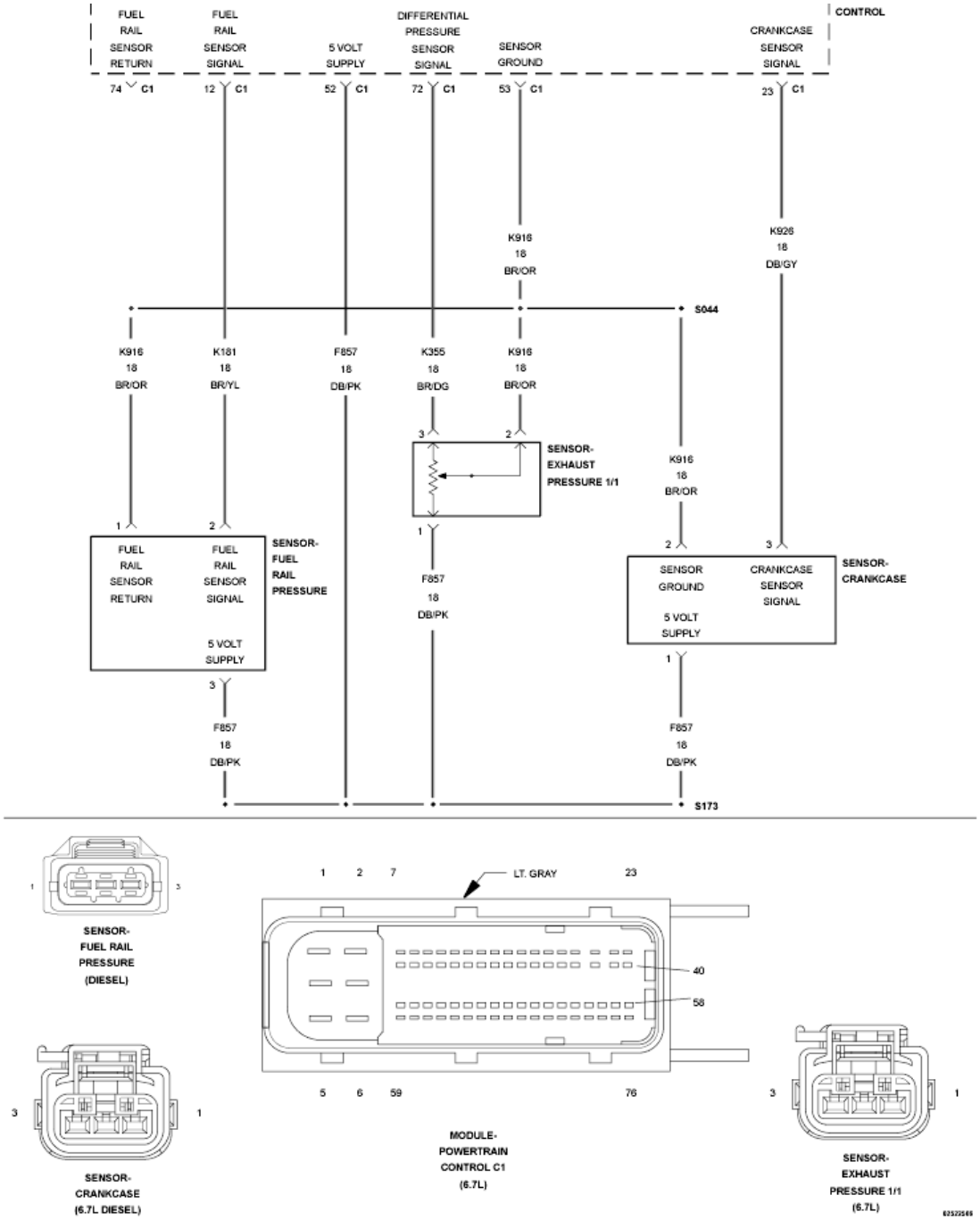

Fig. 20: Fuel Rail Pressure, Exhaust Pressure, & Crankcase Sensor Circuit Schematic
Courtesy of CHRYSLER GROUP, LLC

For a complete wiring diagram, **refer to appropriate SYSTEM WIRING DIAGRAMS article** .

THEORY OF OPERATION

The Exhaust Gas Pressure Sensor is used to measure exhaust gas pressure in the exhaust manifold. The Powertrain Control Module (PCM) provides a 5-Volt supply to the Exhaust Gas Pressure Sensor on the sensor supply circuit. The PCM also provides a ground on the sensor return circuit. The Exhaust Gas Pressure Sensor

provides a signal to the PCM on the Exhaust Gas Pressure Sensor Signal circuit. At key on, the readings for the exhaust gas pressure, intake Manifold pressure and ambient air pressure are compared. This fault code occurs if the exhaust gas pressure reading is different from the other two. During normal engine operation EGR position and Boost Pressure Sensor readings are used to calculate an estimated exhaust pressure. If the difference between the estimated and the value read from the Exhaust Gas Pressure Sensor is above a calibrated threshold for a calibrated period of time then an error is recorded. The key-on portion of the rationality will light the MIL immediately after the diagnostic runs and fails. The rationality portion has to fail in two consecutive drive cycles for the MIL to become illuminated. If this fault becomes active the PCM will light the MIL light immediately. During this time the PCM uses an estimated exhaust gas pressure. The PCM turns off the MIL when the diagnostic runs and passes in four consecutive drive cycles.

WHEN MONITORED:

Ignition on.

SET CONDITION:

The circuit voltage to the PCM is above 4.75 Volts for five seconds.

POSSIBLE CAUSES

Possible Causes
(F857) 5-VOLT SUPPLY SHORTED TO VOLTAGE
(K355) EXHAUST PRESSURE SENSOR SIGNAL WIRE SHORTED TO VOLTAGE
(K916) SENSOR GROUND CIRCUIT OPEN/HIGH RESISTANCE
EXHAUST PRESSURE SENSOR
POWERTRAIN CONTROL MODULE (PCM)

Always perform the Pre-Diagnostic Troubleshooting procedure before proceeding. Refer to PRE-DIAGNOSTIC TROUBLESHOOTING PROCEDURE - 6.7L .

DIAGNOSTIC TEST

1. **ACTIVE DTC**

NOTE: **If any 5-Volt supply DTCs are present, repair those DTCs before proceeding.**

1. Turn the ignition on.
2. With the scan tool, record all Freeze frame data.
3. With the scan tool, erase DTCs.
4. Turn the ignition off for 75 seconds.
5. Turn the ignition on.
6. With the scan tool, read DTCs.

Did the DTC reset?

Yes

- Go To 2.

No

- Perform the INTERMITTENT CONDITION diagnostic procedure. Refer to **INTERMITTENT CONDITION - 6.7L** .

2. **CHECK THE (K355) EXHAUST PRESSURE SENSOR SIGNAL FOR A SHORT TO VOLTAGE**

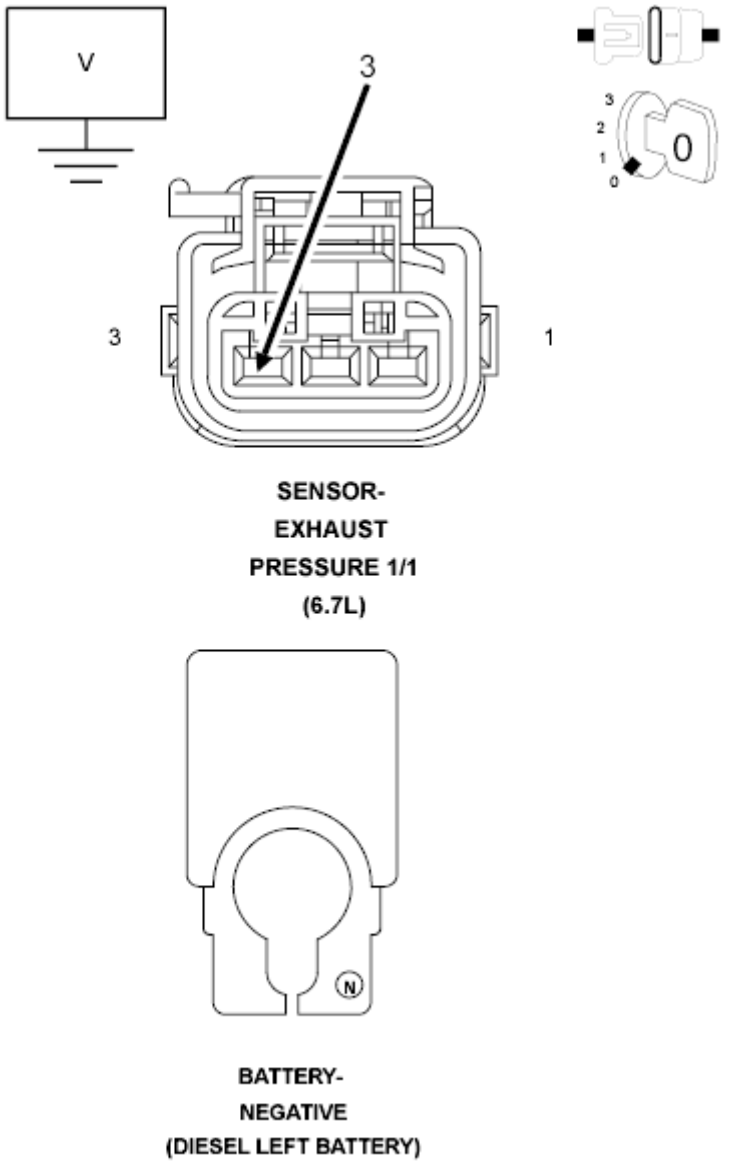

Fig. 21: Exhaust Pressure Sensor 1 Connector Pin ID & Battery Negative Cable
Courtesy of CHRYSLER GROUP, LLC

1. Turn the ignition off.
2. Disconnect the Exhaust Pressure Sensor harness connector.
3. Disconnect the PCM C1 harness connector.

NOTE: Check connectors - Clean/repair as necessary.

4. Remove the ASD/Main Relay.
5. Connect a jumper between cavity 30 and cavity 87 of the ASD/Main Relay connector.
6. Turn the ignition on.
7. Measure the voltage on the (K355) Exhaust Pressure Sensor Signal circuit at the Exhaust Pressure Sensor harness connector.

   Is there any voltage present?

   Yes

   - Repair the (K355) Exhaust Pressure Sensor Signal circuit for a short to voltage.
   - Perform the POWERTRAIN VERIFICATION TEST - 6.7L. Refer to **POWERTRAIN VERIFICATION TEST - 6.7L** .

   No

   - Go To 3.

3. **CHECK THE (K916) SENSOR GROUND CIRCUIT FOR AN OPEN/HIGH RESISTANCE**

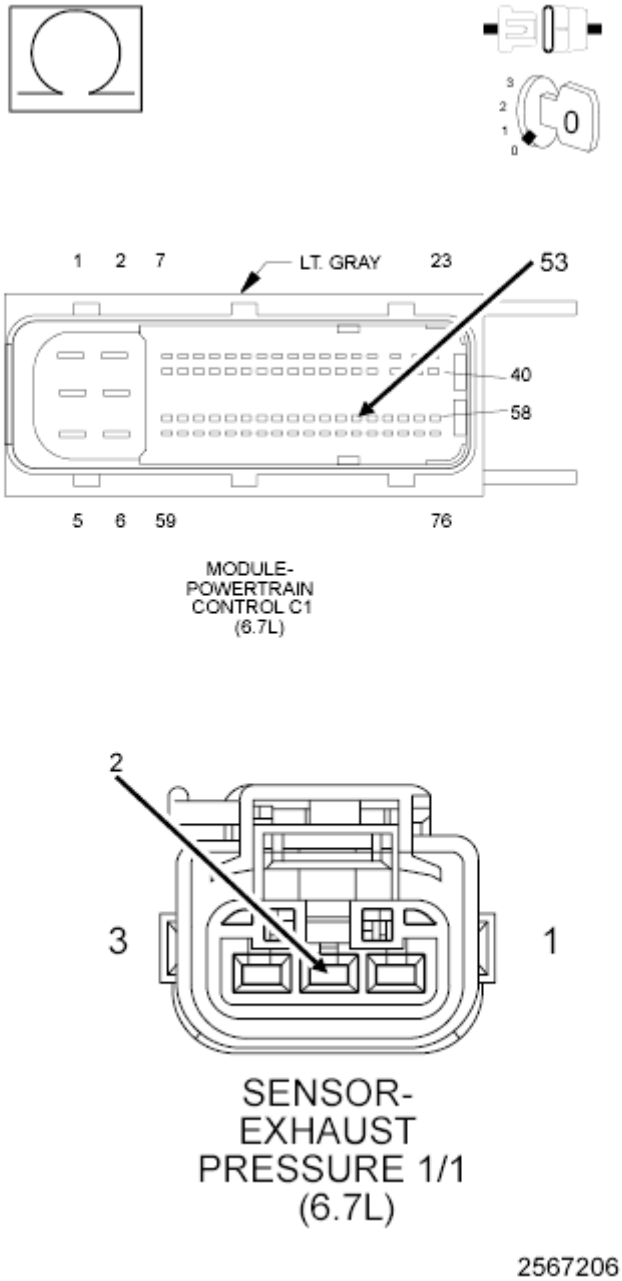

Fig. 22: Checking Exhaust Pressure Sensor Ground Circuit For Open Or High Resistance
Courtesy of CHRYSLER GROUP, LLC

1. Turn the ignition off.
2. Disconnect the PCM C1 harness connector.
3. Measure the resistance of the (K916) Sensor Ground circuit between the Exhaust Pressure Sensor harness connector and the PCM C1 harness connector.

   Is the resistance below 5.0 Ohms?

   Yes

- Go To 4.

No

- Repair the (K916) Sensor Ground circuit for an open or high resistance.
- Perform the POWERTRAIN VERIFICATION TEST - 6.7L. Refer to **POWERTRAIN VERIFICATION TEST - 6.7L** .

4. **CHECK THE EXHAUST PRESSURE SENSOR**

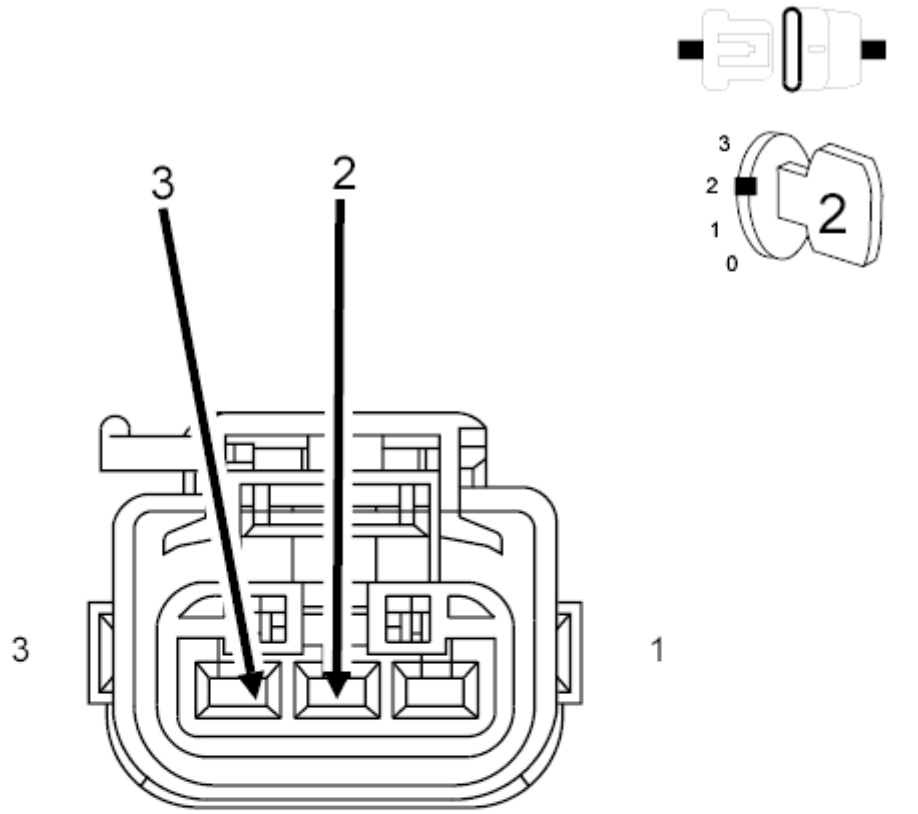

SENSOR-
EXHAUST
PRESSURE 1/1
(6.7L)

183142

Fig. 23: Exhaust Pressure Sensor Harness Connector
Courtesy of CHRYSLER GROUP, LLC

1. Reconnect the PCM C1 harness connector.
2. Turn the ignition on.
3. While monitoring the scan tool, connect a jumper across the (K355) Exhaust Pressure Sensor Signal circuit and the (K916) Sensor Ground circuit at the Exhaust Pressure Sensor harness connector.

   Did the scan tool display DTC P0472 active?

   Yes

   - Replace the Exhaust Pressure Sensor in accordance with the service information.
   - Perform the POWERTRAIN VERIFICATION TEST - 6.7L. Refer to **POWERTRAIN VERIFICATION TEST - 6.7L** .

   No

   - Replace the Powertrain Control Module in accordance with the service information.
   - Perform the POWERTRAIN VERIFICATION TEST - 6.7L. Refer to **POWERTRAIN VERIFICATION TEST - 6.7L** .

P0489-EGR CONTROL CIRCUIT LOW

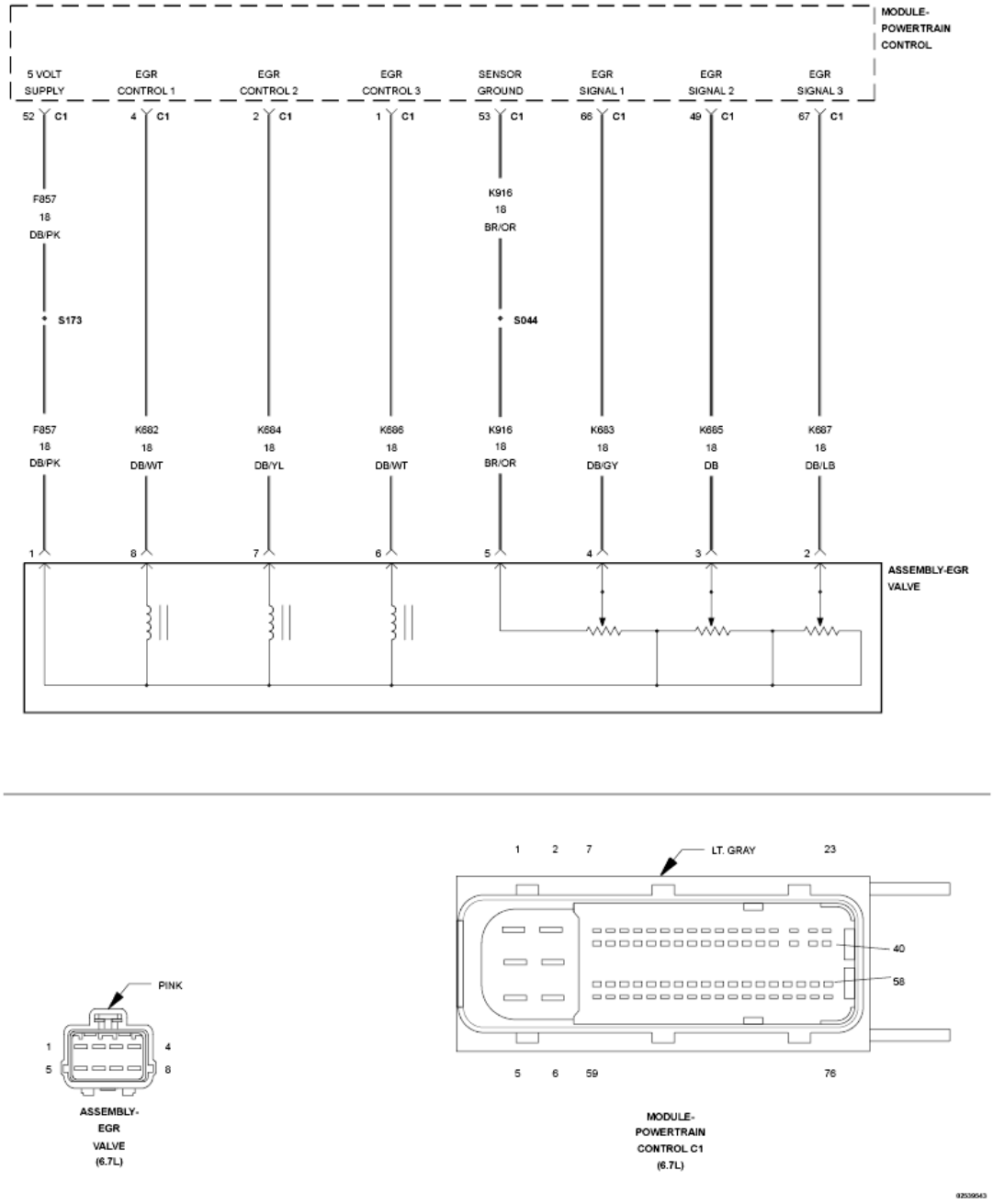

Fig. 24: EGR Valve Assembly Circuit Schematic
Courtesy of CHRYSLER GROUP, LLC

For a complete wiring diagram, **refer to appropriate SYSTEM WIRING DIAGRAMS article** .

THEORY OF OPERATION

When the Exhaust Gas Recirculation (EGR) Valve is opening to a position and uses too much current to achieve that position, the diagnostic will fail. Also at every key on, the EGR valve tries to recalibrate it's position. The valve shaft will move until it comes into contact with the valve. If the distance the valve shaft must move is different by a calibrated amount than the original learned movement the diagnostic fails. The valve will perform

this auto zero function at every key on and every time the valve is commanded closed throughout the engine operating cycle. The Powertrain Control Module (PCM) will illuminate the MIL lamp after the diagnostic runs and fails in two consecutive drive cycles. The PCM will also turn on the ETC lamp. During this time the PCM will no longer control the EGR valve. The MIL lamp will turn off once the diagnostic runs and passes in four consecutive drive cycles.

WHEN MONITORED:

At key on, while engine running.

SET CONDITION:

Motor effort exceeds a calibrated level or auto zero function fails.

POSSIBLE CAUSES

Possible Causes
EGR VALVE

Always perform the Pre-Diagnostic Troubleshooting procedure before proceeding. Refer to PRE-DIAGNOSTIC TROUBLESHOOTING PROCEDURE - 6.7L .

DIAGNOSTIC TEST

1. **OTHER EGR VALVE DTCS PRESENT**
    1. Ignition on, engine not running.
    2. With the scan tool, read DTCs.

    Are there any EGR circuit DTCs present?

    Yes

    - Repair the other EGR Valve DTCs before proceeding.

    No

    - Remove and clean the EGR Valve with Mopar EGR system cleaner. Refer to **TURBOCHARGER SYSTEM, CLEANING, 6.7L** .
    - Go To 2.
2. **EGR VALVE**
    1. Ignition on, engine not running.
    2. With the scan tool, erase DTC.
    3. Test drive the vehicle.
    4. With the scan tool, read DTCs.

Did DTC P0489 return?

Yes

- Replace the EGR Valve in accordance with the service information.
- Perform the DIESEL AFTERTREATMENT VALIDATION - 6.7L procedure. Refer to **DIESEL AFTERTREATMENT VALIDATION- 6.7L** .

No

- Repair complete.
- Perform the DIESEL AFTERTREATMENT VALIDATION - 6.7L procedure. Refer to **DIESEL AFTERTREATMENT VALIDATION- 6.7L** .

P049D-EGR CONTROL POSITION EXCEEDED LEARNING LIMIT

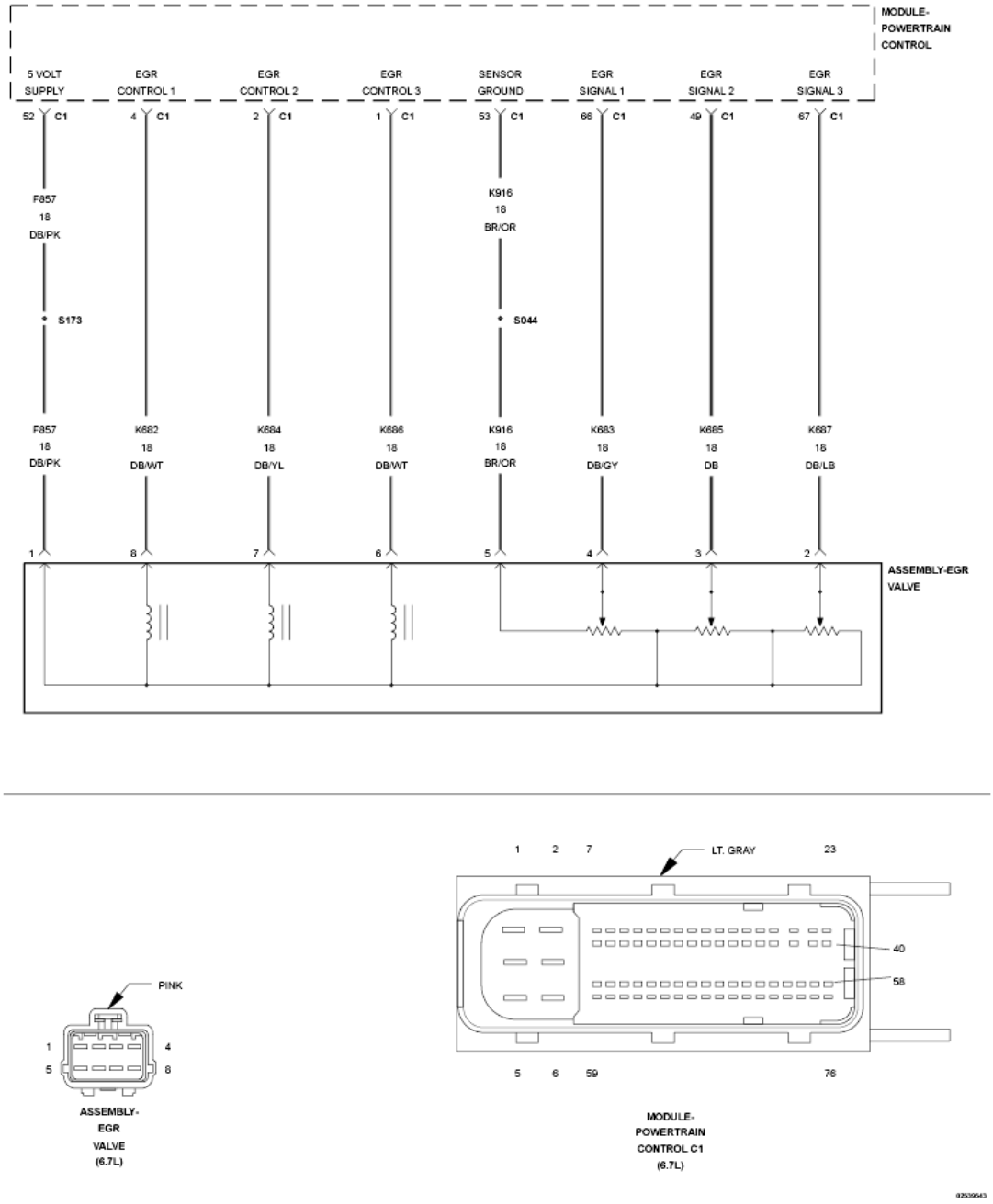

Fig. 25: EGR Valve Assembly Circuit Schematic
Courtesy of CHRYSLER GROUP, LLC

For a complete wiring diagram, **refer to appropriate SYSTEM WIRING DIAGRAMS article** .

THEORY OF OPERATION

When the Exhaust Gas Recirculation (EGR) Valve is opening to a position and uses too much current to achieve that position, the diagnostic will fail. Also at every key on, the EGR valve tries to recalibrate it's position. The valve shaft will move until it comes into contact with the valve. If the distance the valve shaft must move is different by a calibrated amount than the original learned movement the diagnostic fails. The valve will perform

this auto zero function at every key on and every time the valve is commanded closed throughout the engine operating cycle. The Powertrain Control Module (PCM) will illuminate the MIL lamp after the diagnostic runs and fails in two consecutive drive cycles. The PCM will also turn on the ETC lamp. During this time the PCM will no longer control the EGR valve. The MIL lamp will turn off once the diagnostic runs and passes in four consecutive drive cycles.

WHEN MONITORED:

At key on, while engine running.

SET CONDITION:

Motor effort exceeds a calibrated level or auto zero function fails.

POSSIBLE CAUSES

Possible Causes
EGR VALVE

Always perform the Pre-Diagnostic Troubleshooting procedure before proceeding. Refer to PRE-DIAGNOSTIC TROUBLESHOOTING PROCEDURE - 6.7L .

DIAGNOSTIC TEST

1. **OTHER EGR VALVE DTCS PRESENT**
    1. Ignition on, engine not running.
    2. With the scan tool, read DTCs.

    Are there any EGR circuit DTCs present?

    Yes

    - Repair the other EGR Valve DTCs before proceeding.

    No

    - Remove and clean the EGR Valve with Mopar EGR system cleaner.
    - Go To 2.
2. **EGR VALVE**
    1. Ignition on, engine not running.
    2. With the scan tool, erase DTC.
    3. Test drive the vehicle.
    4. With the scan tool, read DTCs.

    Did DTC P049D return?

Yes

- Replace the EGR Valve in accordance with the service information.
- Perform the POWERTRAIN VERIFICATION TEST - 6.7L. Refer to **POWERTRAIN VERIFICATION TEST - 6.7L** .

No

- Repair complete.
- Perform the POWERTRAIN VERIFICATION TEST - 6.7L. Refer to **POWERTRAIN VERIFICATION TEST - 6.7L** .

P04DB-CRANKCASE VENTILATION SYSTEM DISCONNECTED

For a complete wiring diagram, **refer to appropriate SYSTEM WIRING DIAGRAMS article** .

WHEN MONITORED:

Engine at operating temperature, driving at a steady speed. This monitor takes 10 minutes to completely run.

SET CONDITION:

Crankcase Pressure readings have been significantly elevated, as compared to historic trends saved in the Powertrain Control Module.

POSSIBLE CAUSES

Possible Causes
DISCONNECTED CRANKCASE VENTILATION HOSE
INTAKE SYSTEM LEAK
CRANKCASE BREATHER FILTER CLOGGED

Always perform the Pre-Diagnostic Troubleshooting procedure before proceeding. Refer to PRE-DIAGNOSTIC TROUBLESHOOTING PROCEDURE - 6.7L .

DIAGNOSTIC TEST

1. **CHECK THE CRANKCASE VENTILATION HOSE**

NOTE: **If there are any DTCs present for the EGR Valve, EGR Airflow Control Valve, or any of the pressure sensors, perform the diagnostics for those DTCs before proceeding with this test procedure.**

1. Visually inspect the Crankcase Ventilation Hose.

   Is the hose disconnected, cracked, pinched or damaged?

Yes

- Repair or replace the Crankcase Ventilation Hose in accordance with the service information.
- Perform the POWERTRAIN VERIFICATION TEST - 6.7L. Refer to **POWERTRAIN VERIFICATION TEST - 6.7L** .

No

- Go To 2.

2. **CHECK THE INTAKE SYSTEM FOR LEAKS**
   1. Perform the INTAKE AIR SYSTEM PRESSURE TEST diagnostic procedure. Refer to **DIAGNOSIS AND TESTING, 6.7L** .

      Were any Intake System leaks found?

      Yes

      - Perform the appropriate repair.
      - Perform the POWERTRAIN VERIFICATION TEST - 6.7L. Refer to **POWERTRAIN VERIFICATION TEST - 6.7L** .

      No

      - Replace the Crankcase Breather Filter in accordance with the service information.
      - Perform the POWERTRAIN VERIFICATION TEST - 6.7L. Refer to **POWERTRAIN VERIFICATION TEST - 6.7L** .

P0501-VEHICLE SPEED SENSOR 1 PERFORMANCE

For a complete wiring diagram, **refer to appropriate SYSTEM WIRING DIAGRAMS article** .

THEORY OF OPERATION

The Powertrain Control Module (PCM) monitors the vehicle speed via the Anti-Lock Brake Module over the CAN BUS. When the PCM sees a high torque and high boost condition for a period of time and the vehicle speed has continually reported 0 MPH, a DTC is set. This monitor is a one trip fault.

WHEN MONITORED:

While the engine is running.

SET CONDITION:

The PCM indicates a high torque and high boost condition, and the VSS has continually reported zero.

POSSIBLE CAUSES

Possible Causes
(B222) REAR WHEEL SPEED SENSOR SUPPLY CIRCUIT SHORT TO GROUND
(B22) REAR WHEEL SPEED SENSOR SIGNAL CIRCUIT SHORT TO GROUND
(B222) REAR WHEEL SPEED SENSOR SUPPLY CIRCUIT OPEN
(B22) REAR WHEEL SPEED SENSOR SIGNAL CIRCUIT OPEN
(B222) REAR WHEEL SPEED SENSOR SUPPLY CIRCUIT SHORTED TO VOLTAGE
(B22) REAR WHEEL SPEED SENSOR SIGNAL CIRCUIT SHORTED TO VOLTAGE
(B222) REAR WHEEL SPEED SENSOR SUPPLY CIRCUIT SHORTED TO THE (B22) REAR WHEEL SPEED SENSOR SIGNAL CIRCUIT
TONE WHEEL
EXCESSIVE REAR WHEEL SPEED SENSOR AIR GAP
WHEEL BEARING
REAR WHEEL SPEED SENSOR
ANTI-LOCK BRAKE MODULE

Always perform the Pre-Diagnostic Troubleshooting procedure before proceeding. Refer to PRE-DIAGNOSTIC TROUBLESHOOTING PROCEDURE - 6.7L .

DIAGNOSTIC TEST

1. **DTC IS ACTIVE**
    1. Turn the ignition on.
    2. With the scan tool, clear DTCs.
    3. Test drive the vehicle.
    4. With the scan tool, select View DTCs.

    Is the status Active for this DTC?

    Yes

    - Go To 2.

    No

    - Perform the INTERMITTENT CONDITION diagnostic procedure. Refer to **INTERMITTENT CONDITION - 6.7L** .
2. **INSPECT THE WHEEL SPEED SENSOR**
    1. Turn the ignition off.
    2. Inspect the Wheel Speed Sensor for proper mounting.
    3. Inspect the Wheel Speed Sensor harness and connector.
    4. Inspect the Wheel Speed Sensor for excessive debris on the sensor.

    Were any problems found?

Yes

- Repair as necessary in accordance with the Service Information.
- Perform the ABS VERIFICATION TEST. Refer to **ABS VERIFICATION TEST** .

No

- Go To 3.

3. **CHECK FOR TONE WHEEL DAMAGED/MISSING**
   1. Inspect the Tone Wheel in accordance with the Service Information.

      NOTE: The Tone Wheel Teeth should be perfectly square, not bent or nicked.

      Were any problems found?

      Yes

      - Replace the Tone Wheel in accordance with the Service Information.
      - Perform the ABS VERIFICATION TEST. Refer to **ABS VERIFICATION TEST** .

      No

      - Go To 4.

4. **CHECK FOR EXCESSIVE WHEEL SPEED SENSOR AIR GAP**
   1. Measure the Wheel Speed Sensor Air Gap in accordance with the Service Information.

      Were any problems found?

      Yes

      - Repair as necessary in accordance with the Service Information.
      - Perform the ABS VERIFICATION TEST. Refer to **ABS VERIFICATION TEST** .

      No

      - Go To 5.

5. **CHECK FOR WHEEL BEARING LOOSE/BINDING**
   1. Inspect the wheel bearings for excessive run out or improper clearance in accordance with the Service Information.

      Were any problems found?

      Yes

- Repair as necessary in accordance with the Service Information.
- Perform the ABS VERIFICATION TEST. Refer to **ABS VERIFICATION TEST** .

No

- Go To 6.

6. **CHECK THE (B222) REAR WHEEL SPEED SENSOR SUPPLY CIRCUIT FOR A SHORT TO GROUND**

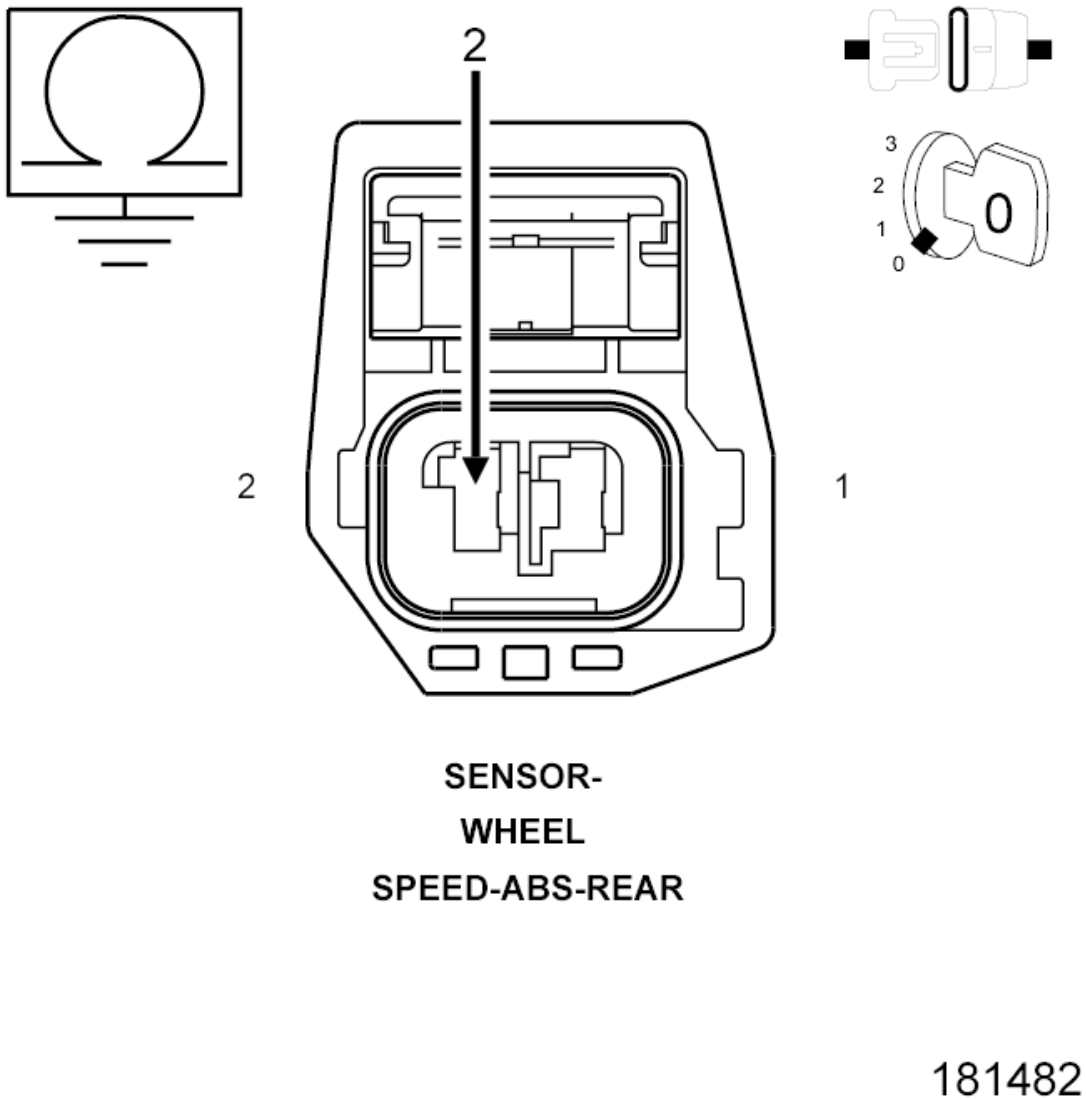

Fig. 26: Rear Wheel Speed Sensor Connector Pin ID
Courtesy of CHRYSLER GROUP, LLC

1. Turn the ignition off.
2. Disconnect the Rear Wheel Speed Sensor harness connector.

3. Disconnect the Anti-lock Brake Module harness connector.

NOTE: Check connector - Clean/repair as necessary.

4. Measure the resistance between the (B222) Rear Wheel Speed Sensor Supply circuit and ground.

   Is the resistance above 5.0 Ohms?

   Yes

   - Go To 7.

   No

   - Repair the (B222) Rear Wheel Speed Sensor Supply circuit for a short to ground.
   - Perform the ABS VERIFICATION TEST. Refer to **ABS VERIFICATION TEST** .

7. **CHECK THE (B22) REAR WHEEL SPEED SENSOR SIGNAL CIRCUIT FOR A SHORT TO GROUND**

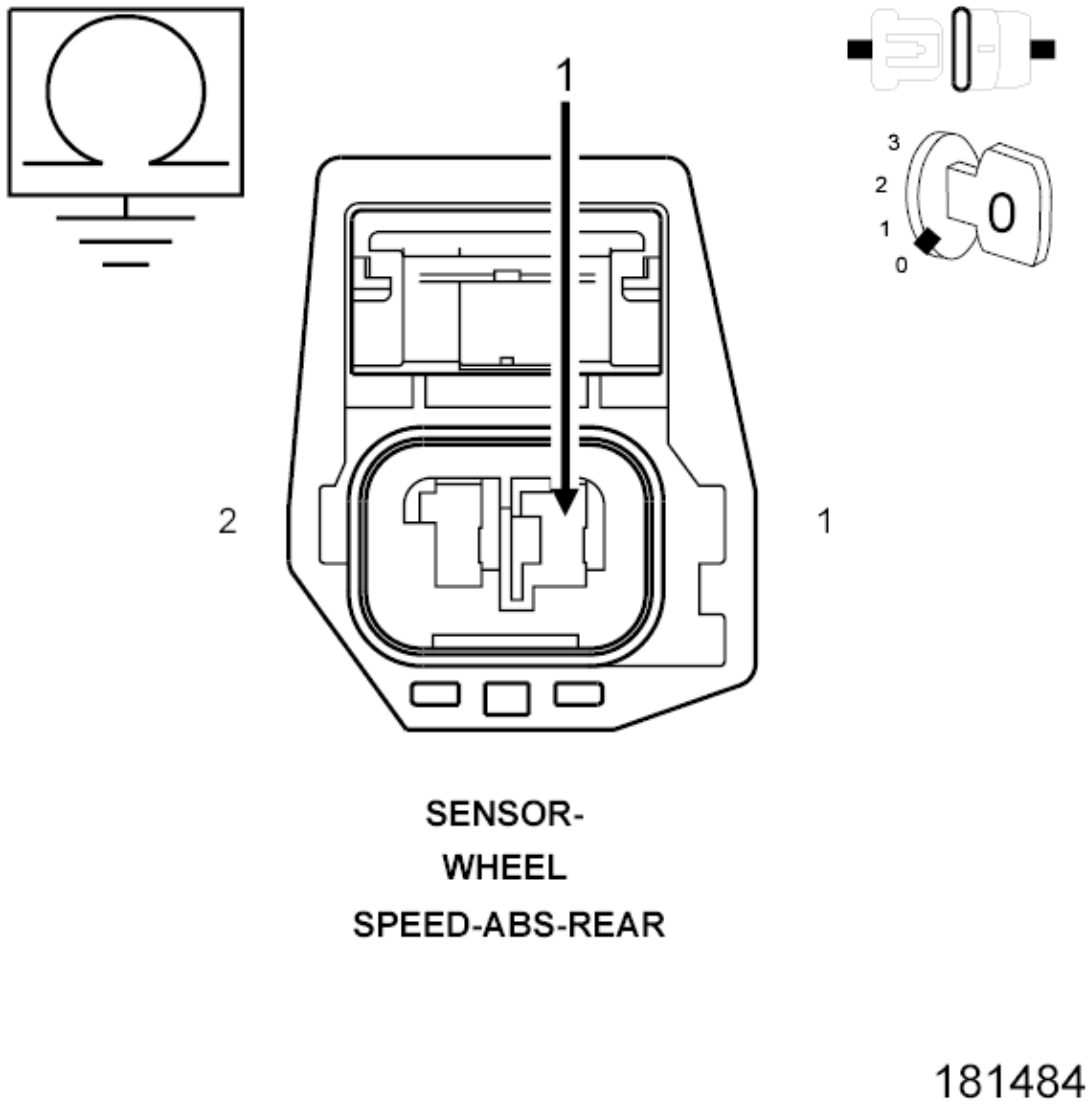

Fig. 27: Rear Wheel Speed Sensor Connector Pin ID
Courtesy of CHRYSLER GROUP, LLC

1. Measure the resistance between the (B22) Rear Wheel Speed Sensor Signal circuit and ground.

   Is the resistance above 5.0 Ohms?

   Yes

   - Go To 8.

   No

   - Repair the (B22) Rear Wheel Speed Sensor Signal circuit for a short to ground.
   - Perform the ABS VERIFICATION TEST. Refer to **ABS VERIFICATION TEST** .

8. **CHECK THE (B222) REAR WHEEL SPEED SENSOR SUPPLY CIRCUIT FOR AN OPEN/HIGH RESISTANCE**

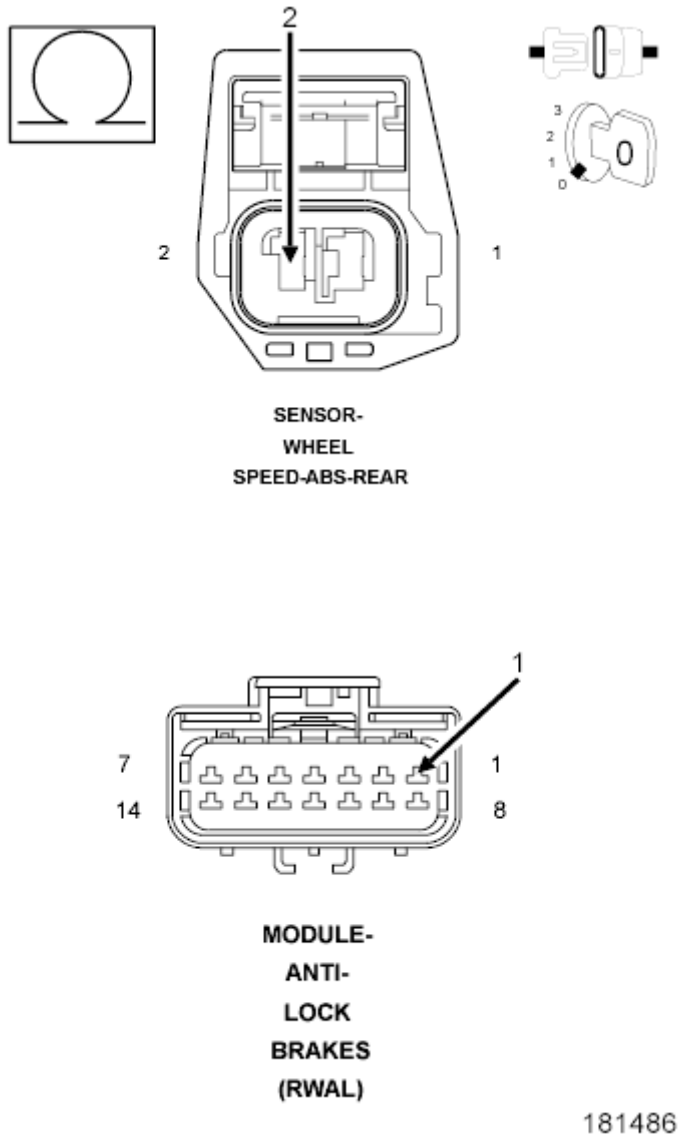

Fig. 28: Checking Rear Wheel Speed Sensor Supply Circuit For Open Or High Resistance
Courtesy of CHRYSLER GROUP, LLC

1. Measure the resistance of the (B222) Rear Wheel Speed Sensor Supply circuit.

   Is the resistance below 5.0 Ohms?

   Yes

   - Go To 9.

   No

- Repair the (B222) Rear Wheel Speed Sensor Supply circuit for an open or high resistance.
- Perform the ABS VERIFICATION TEST. Refer to **ABS VERIFICATION TEST** .

9. **CHECK THE (B22) REAR WHEEL SPEED SENSOR SIGNAL CIRCUIT FOR AN OPEN/HIGH RESISTANCE**

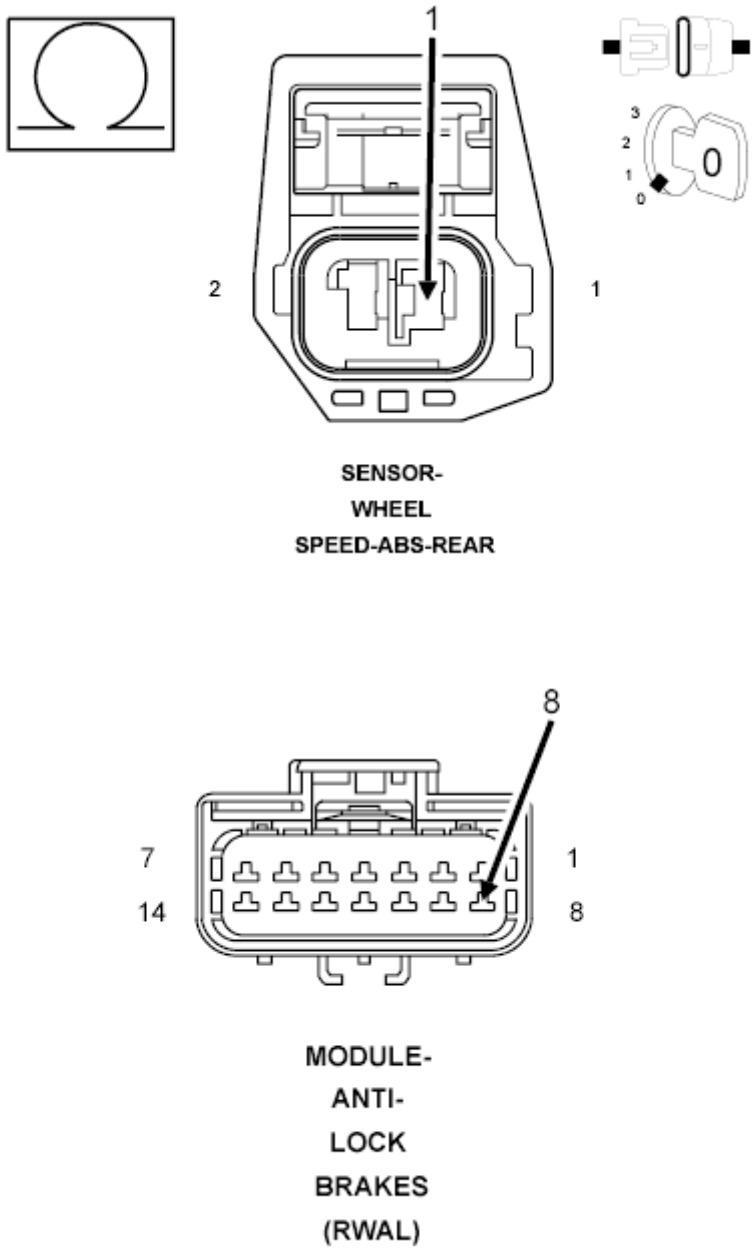

Fig. 29: Checking Rear Wheel Speed Sensor Signal Circuit For Open Or High Resistance
Courtesy of CHRYSLER GROUP, LLC

1. Measure the resistance of the (B22) Rear Wheel Speed Sensor Signal circuit.

   Is the resistance below 5.0 Ohms?

Yes

- Go To 10.

No

- Repair the (B22) Rear Wheel Speed Sensor Signal circuit for an open or high resistance.
- Perform the ABS VERIFICATION TEST. Refer to **ABS VERIFICATION TEST** .

10. **CHECK THE (B222) REAR WHEEL SPEED SENSOR SUPPLY CIRCUIT FOR A SHORT TO VOLTAGE**

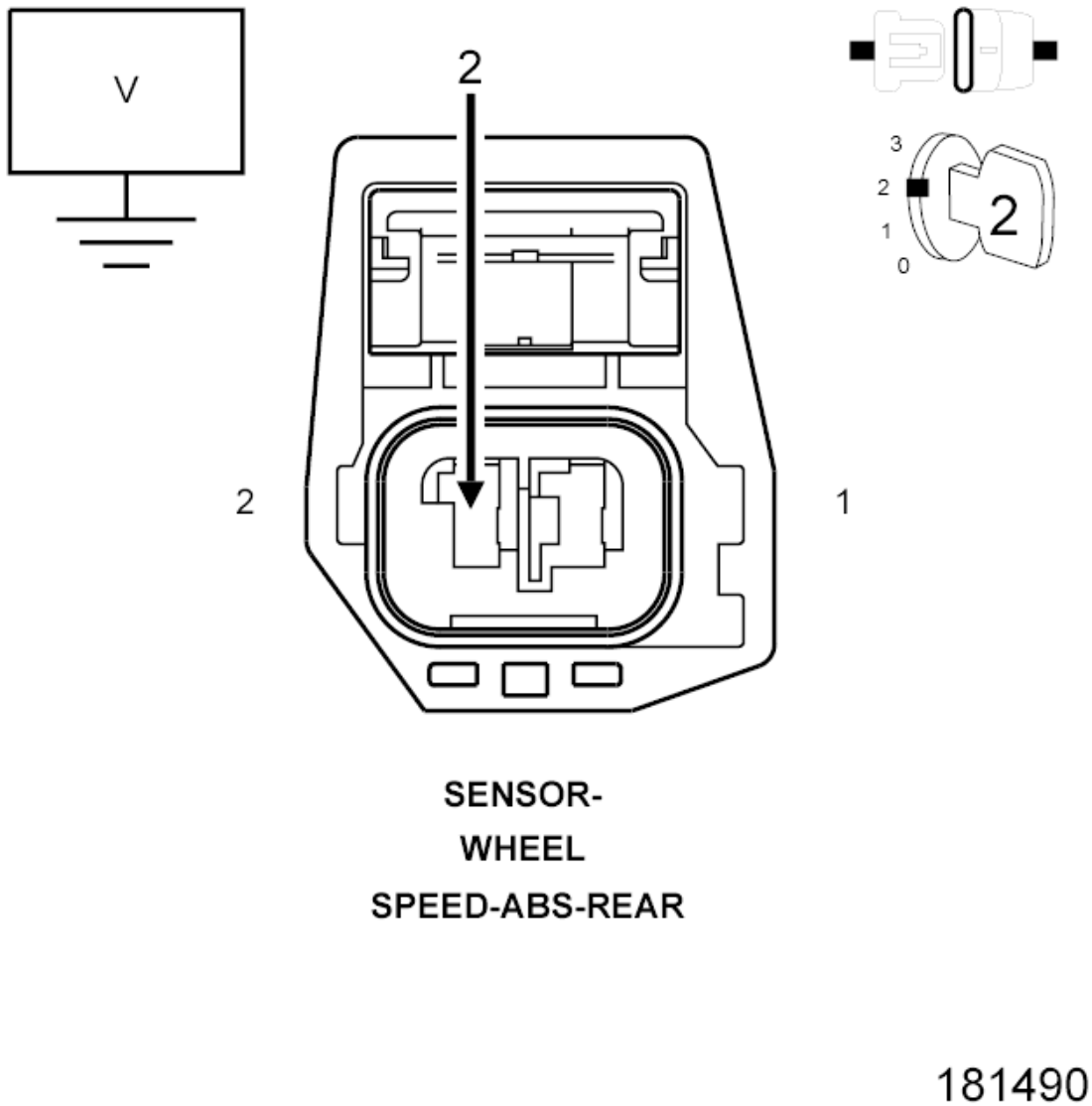

Fig. 30: Rear Wheel Speed Sensor Connector Pin ID
Courtesy of CHRYSLER GROUP, LLC

1. Turn the ignition on.

2. Measure the voltage of the (B222) Rear Wheel Speed Sensor Supply circuit.

   Is there any voltage present?

   Yes

   - Repair the (B222) Rear Wheel Speed Sensor Supply circuit for a short to voltage.
   - Perform the ABS VERIFICATION TEST. Refer to **ABS VERIFICATION TEST** .

   No

   - Go To 11.

11. **CHECK THE (B22) REAR WHEEL SPEED SENSOR SIGNAL CIRCUIT FOR A SHORT TO VOLTAGE**

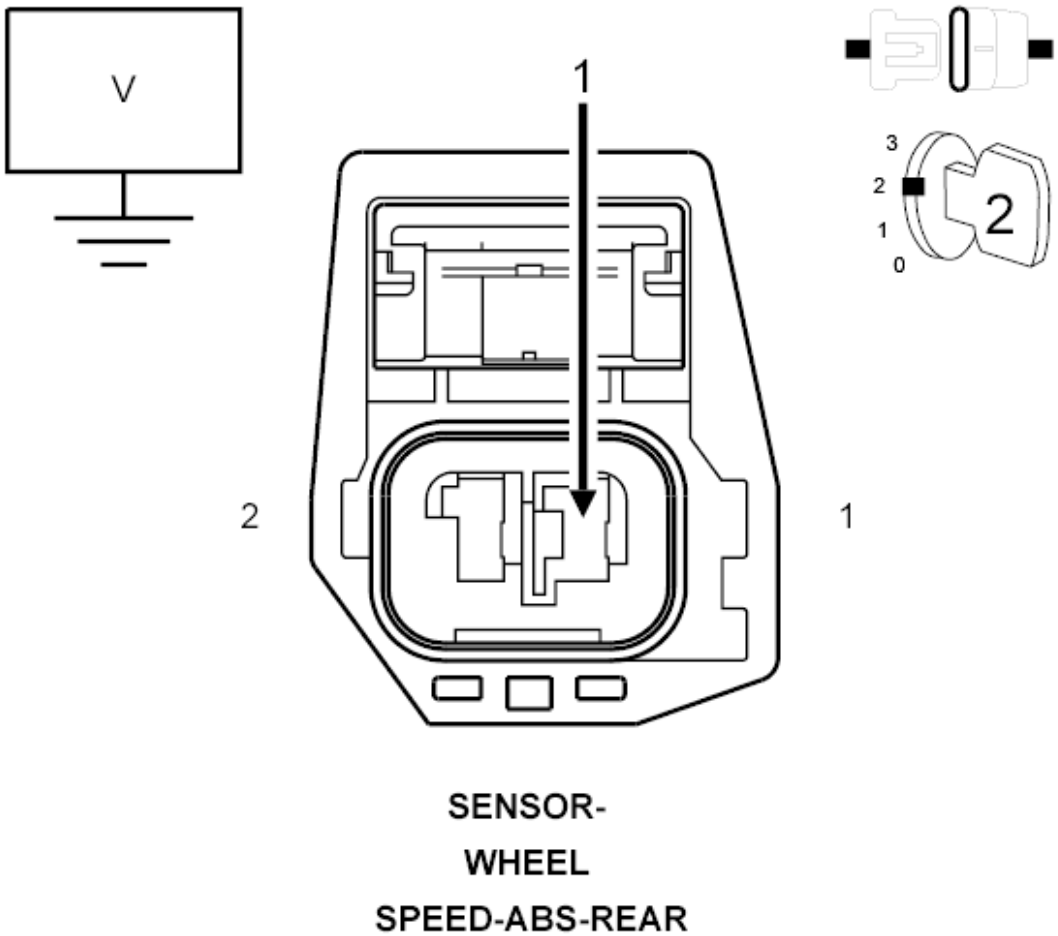

Fig. 31: Rear Wheel Speed Sensor Connector Pin ID
Courtesy of CHRYSLER GROUP, LLC

1. Measure the voltage of the (B22) Rear Wheel Speed Sensor Signal circuit.

   Is there any voltage present?

   Yes

   - Repair the (B22) Rear Wheel Speed Sensor Signal circuit for a short to voltage.
   - Perform the ABS VERIFICATION TEST. Refer to **ABS VERIFICATION TEST** .

   No

   - Go To 12.

12. **CHECK FOR THE (B222) REAR WHEEL SPEED SENSOR SUPPLY CIRCUIT SHORTED TO THE (B22) REAR WHEEL SPEED SENSOR SIGNAL CIRCUIT**

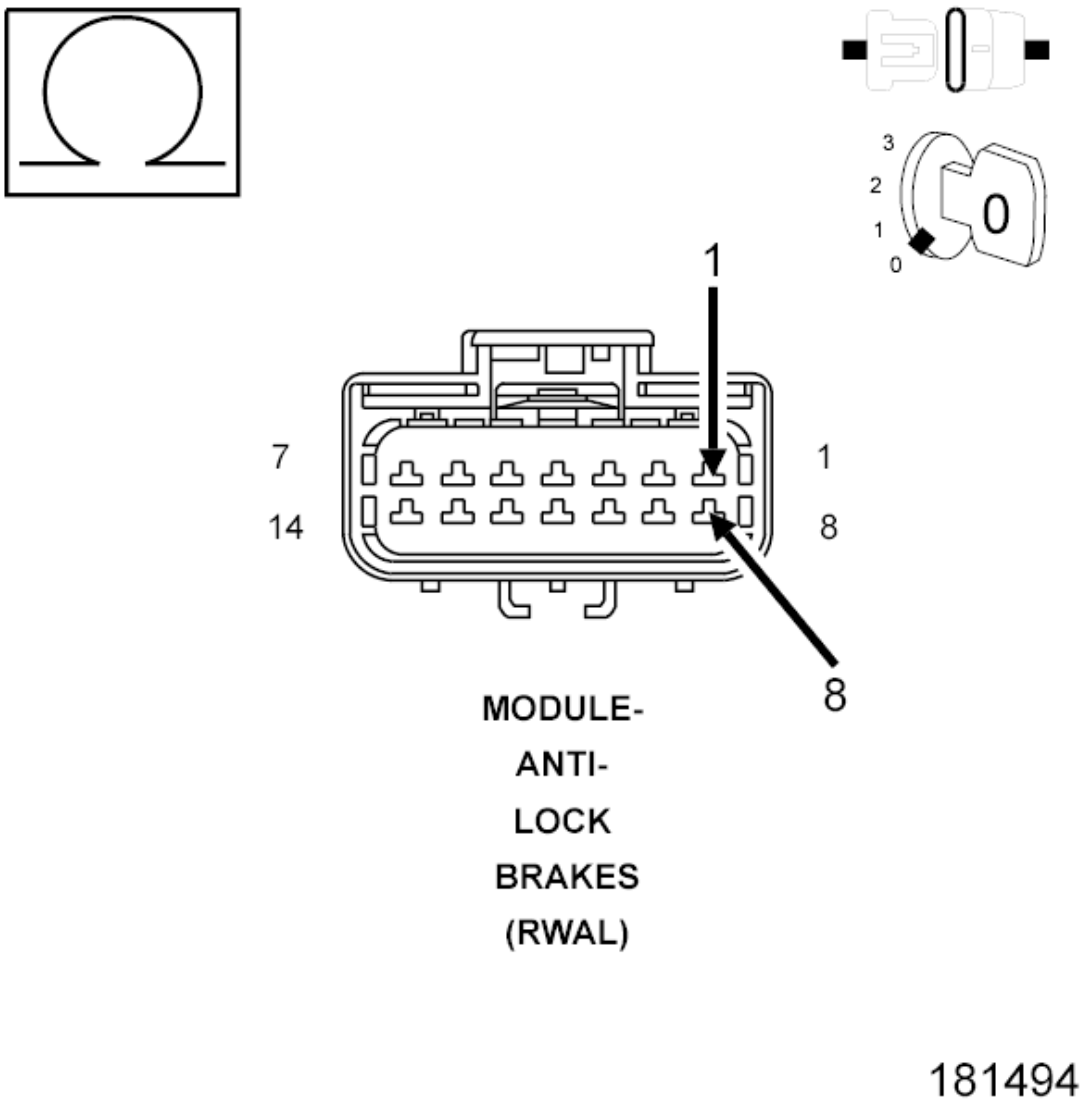

Fig. 32: Checking Rear Wheel Speed Sensor Supply Circuit For A Short To Sensor Signal Circuit
Courtesy of CHRYSLER GROUP, LLC

1. Turn the ignition off.
2. Measure the resistance between the (B222) Rear Wheel Speed Sensor Supply circuit and the (B22) Rear Wheel Speed Sensor Signal circuit at the Anti-lock Brake Module harness connector.

   Is the resistance below 10k Ohms?

   Yes

   - Repair the (B222) Rear Wheel Speed Sensor Supply circuit for a short to the (B22) Rear Wheel Speed Sensor Signal circuit.
   - Perform the ABS VERIFICATION TEST. Refer to **ABS VERIFICATION TEST** .

No

- Go To 13.

13. **CHECK THE REAR WHEEL SPEED SENSOR**

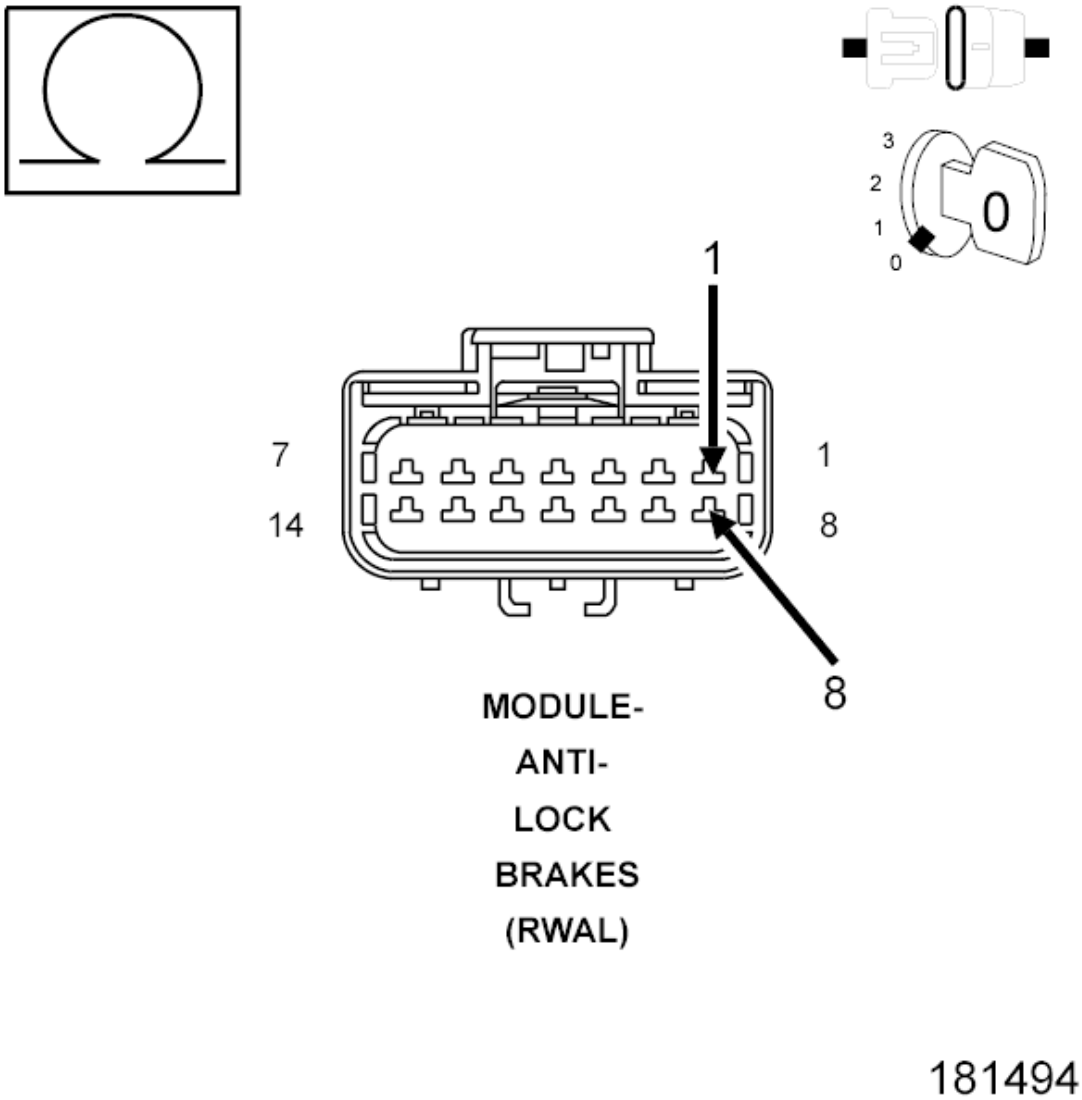

Fig. 33: Checking Rear Wheel Speed Sensor Supply Circuit For A Short To Sensor Signal Circuit
Courtesy of CHRYSLER GROUP, LLC

1. Turn the ignition off.
2. Connect the Rear Wheel Speed Sensor harness connector.
3. Measure the resistance between the (B222) Rear Wheel Speed Sensor Supply circuit and (B22) Rear Wheel Speed Sensor Signal circuit at the Anti-lock Brake Module harness connector.

NOTE: **The resistance should be approximately 1600-2300 Ohms at 76° F (24.5° C).**

Is the resistance within the noted range?

Yes

- Go To 14.

No

- Replace the Rear Wheel Speed Sensor in accordance with the Service Information.
- Perform the ABS VERIFICATION TEST. Refer to **ABS VERIFICATION TEST** .

14. **CHECK THE ANTI-LOCK BRAKE MODULE**
    1. Turn the ignition off.
    2. Inspect the related wiring harness. Look for any chafed, pierced, pinched, or partially broken wires.
    3. Inspect the related wire harness connectors. Look for broken, bent, pushed out, or corroded terminals.
    4. Perform any Technical Service Bulletins that may apply.

    Were any problems found?

    Yes

    - Repair as necessary in accordance with the Service Information.
    - Perform the ABS VERIFICATION TEST. Refer to **ABS VERIFICATION TEST** .

    No

    - Replace the Anti-lock Brake Module in accordance with the Service Information.
    - Perform the ABS VERIFICATION TEST. Refer to **ABS VERIFICATION TEST** .

P0506-IDLE CONTROL SYSTEM RPM - LOWER THAN EXPECTED

For a complete wiring diagram, **refer to appropriate SYSTEM WIRING DIAGRAMS article** .

THEORY OF OPERATION

The engine control system uses many methods to achieve stable idle speed (RPM), and is capable of compensating for unexpected changes in load (accessory devices switching on, etc.). In the event that the engine is incapable of steadily maintaining the desired idle speed, either due to overshooting this target, undershooting, or "hunting", this DTC may be set.

WHEN MONITORED:

With the engine running at idle.

SET CONDITION:

Engine speed is consistently at least 50 RPM below the target idle speed.

POSSIBLE CAUSES

Possible Causes
MECHANICALLY DAMAGED ENGINE ACCESSORIES
SEVERE INTAKE SYSTEM RESTRICTIONS
PLUGGED EXHAUST SYSTEM
TRANSMISSION IMPROPERLY LOCKING TORQUE CONVERTER
FAULTY FUEL SYSTEM

Always perform the Pre-Diagnostic Troubleshooting procedure before proceeding. Refer to PRE-DIAGNOSTIC TROUBLESHOOTING PROCEDURE - 6.7L .

DIAGNOSTIC TEST

1. **CHECK THE ENGINE ACCESSORIES**

   NOTE: If there are any Transmission DTCs present involving the Torque Converter or lock up operation, perform those diagnostic procedures before continuing.

   1. Visually inspect the engine accessories for damage, binding or dragging.

      Were any problems found?

      Yes

      - Repair as necessary.
      - Perform the POWERTRAIN VERIFICATION TEST - 6.7L. Refer to **POWERTRAIN VERIFICATION TEST - 6.7L** .

      No

      - Go To 2.
2. **CHECK THE INTAKE SYSTEM**
   1. Visually inspect the entire Intake System for a restriction.

      Were any restrictions found?

      Yes

      - Repair as necessary.
      - Perform the POWERTRAIN VERIFICATION TEST - 6.7L. Refer to **POWERTRAIN VERIFICATION TEST - 6.7L** .

No

- Go To 3.

3. **CHECK THE EXHAUST SYSTEM**
   1. Visually inspect the entire Exhaust System for a restriction.

      Were any restrictions found?

      Yes

      - Repair as necessary.
      - Perform the POWERTRAIN VERIFICATION TEST - 6.7L. Refer to **POWERTRAIN VERIFICATION TEST - 6.7L** .

      No

      - Go To 4.

4. **CHECK THE FUEL DELIVERY SYSTEM**
   1. and perform the CHECKING THE FUEL DELIVERY SYSTEM diagnostic procedure. Refer to **DIAGNOSIS AND TESTING, 6.7L** .

      Were any problems found?

      Yes

      - Perform the appropriate repair.
      - Perform the POWERTRAIN VERIFICATION TEST - 6.7L. Refer to **POWERTRAIN VERIFICATION TEST - 6.7L** .

      No

      - Perform the INTERMITTENT CONDITION diagnostic procedure. Refer to **INTERMITTENT CONDITION - 6.7L** .

P0507-IDLE CONTROL SYSTEM RPM - HIGHER THAN EXPECTED

For a complete wiring diagram, **refer to appropriate SYSTEM WIRING DIAGRAMS article** .

THEORY OF OPERATION

The engine control system uses many methods to achieve stable idle speed (RPM), and is capable of compensating for unexpected changes in load (accessory devices switching on, etc.). In the event that the engine is incapable of steadily maintaining the desired idle speed, either due to overshooting this target, undershooting, or "hunting", this DTC may be set.

WHEN MONITORED:

Engine is at idle.

SET CONDITION:

Engine speed is consistently at least 50 RPM above the target idle speed.

POSSIBLE CAUSES

Possible Causes
LEAKING FUEL INJECTOR

Always perform the Pre-Diagnostic Troubleshooting procedure before proceeding. Refer to PRE-DIAGNOSTIC TROUBLESHOOTING PROCEDURE - 6.7L .

DIAGNOSTIC TEST

1. **CHECK FUEL INJECTORS**
    1. Using Fuel Rail Cap (special tool #9864, Cap, Fuel Rail), cap off the Fuel Injectors one at a time to determine which Fuel Injector is leaking into a cylinder.

       View repair

       Yes

       - Replace the faulty Fuel Injector in accordance with the Service Information.
       - Perform the POWERTRAIN VERIFICATION TEST - 6.7L. Refer to **POWERTRAIN VERIFICATION TEST - 6.7L** .

P0513-INVALID WIN KEY

For a complete wiring diagram, **refer to appropriate SYSTEM WIRING DIAGRAMS article** .

WHEN MONITORED:

With the ignition on.

SET CONDITION:

Invalid Key Code received from Wireless Ignition Node (WIN).

POSSIBLE CAUSES

Possible Causes
GENERAL NETWORK ERROR
KEY NOT PROGRAMMED
INCORRECT KEY

INCORRECT VIN IN PCM OR WCM
LOSS OF COMMUNICATION BETWEEN PCM AND WIN
POWERTRAIN CONTROL MODULE (PCM)

Always perform the Pre-Diagnostic Troubleshooting procedure before proceeding. Refer to PRE-DIAGNOSTIC TROUBLESHOOTING PROCEDURE - 6.7L .

DIAGNOSTIC TEST

1. **ACTIVE DTC**

   NOTE: **An external Radio-Frequency Identification (RFID) key (and/or pass/radio key), such as one used to gain access to a 24 hour gym, can cause this DTC to set and create a no start condition. Inspect the customer's key chain for any type of RFID key. If one is not found, question the customer to see if a spare key chain has this RFID key on it or if it was removed from the original key chain before the vehicle was released for service. If a RFID key is present, remove the ignition key from the vehicle and remove the RFID key from the key chain. For PCM equipped vehicles, the vehicle should start once the RFID key is removed. If the vehicle does not start, continue with the diagnostic test.**

   1. Ignition on, engine not running.
   2. With the scan tool, read the PCM DTCs.

      Is the DTC active at this time?

      Yes

      - Go To 2.

      No

      - Go To 6.
2. **CHECK COMMUNICATION WITH WIN**
   1. With the scan tool, attempt to communicate with the WIN.

      Can the scan tool communicate with the WIN?

      Yes

      - Go To 3.

      No

      - Go to and perform the appropriate diagnostic procedure.

- Perform the WIN VERIFICATION TEST. Refer to **DIAGNOSIS AND TESTING** .

3. **CHECK FOR WIN TROUBLE CODES SET**
   1. With the scan tool, check for WIN DTCs.

      Are any DTCs present in the WIN?

      Yes

      - Go to and perform the appropriate diagnostic procedure. Refer to **DIAGNOSIS AND TESTING** .
      - Perform the WIN VERIFICATION TEST. Refer to **DIAGNOSIS AND TESTING** .

      No

      - Go To 4.
4. **CHECK FOR THE VIN PROGRAMMED INTO PCM**
   1. With the scan tool, display the VIN that is programmed in the PCM.

      Has a VIN been programmed into the PCM?

      Yes

      - Go To 5.

      No

      - Program the correct VIN into the PCM and retest.
      - Perform the WIN VERIFICATION TEST. Refer to **DIAGNOSIS AND TESTING** .
5. **POWERTRAIN CONTROL MODULE**
   1. Turn the ignition off.
   2. Replace and program the WIN in accordance with the Service Information.
   3. Ignition on, engine not running.
   4. With the scan tool, erase all WIN and PCM DTCs.
   5. Attempt to start and idle the engine.
   6. With the scan tool, read the PCM DTCs.

      Does the scan tool display this code?

      Yes

      - Check the PCM harness connector terminals for corrosion, damage, or terminal push out. Repair as necessary. Replace and program the Powertrain Control Module per Service Information.

- Perform the WIN VERIFICATION TEST. Refer to **DIAGNOSIS AND TESTING** .

No

- Test Complete.

6. **IGNITION KEY**

NOTE: You must obtain the WIN pin number.

NOTE: This DTC could have been set if the WIN harness connector was disconnected, or if the WIN was replaced recently.

NOTE: All keys that the customer uses for this vehicle must be tested to verify they are operating properly.

1. Ignition on, engine not running.
2. Verify the correct VIN is programmed into the PCM and WIN.
3. Turn the ignition off.
4. With each customer key turn the ignition on and crank the engine to start.
5. With the scan tool, read the PCM DTCs. Look for P0513.

NOTE: If this DTC cannot be reset, it could have been an actual theft attempt.

Is the DTC P0513 still active?

Yes

- Replace the Ignition Key.
- Perform the WIN VERIFICATION TEST. Refer to **DIAGNOSIS AND TESTING** .

No

- Test Complete.

P051B-CRANKCASE PRESSURE SENSOR CIRCUIT RANGE/PERFORMANCE

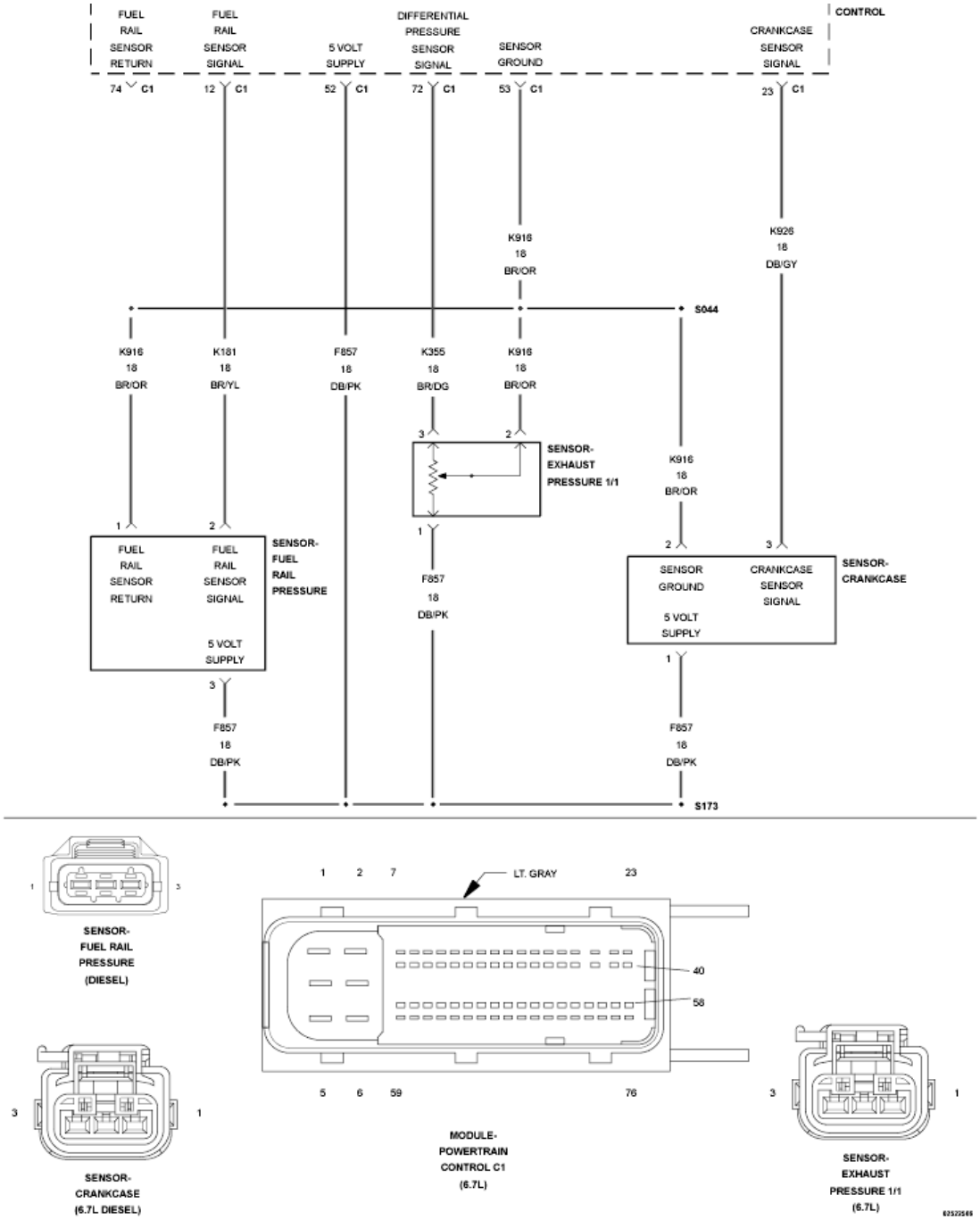

Fig. 34: Fuel Rail Pressure, Exhaust Pressure, & Crankcase Sensor Circuit Schematic
Courtesy of CHRYSLER GROUP, LLC

For a complete wiring diagram, **refer to appropriate SYSTEM WIRING DIAGRAMS article** .

THEORY OF OPERATION

The Crankcase Pressure Sensor is used to monitor the pressure inside the crankcase. The Powertrain Control Module (PCM) supplies the crankcase pressure sensor a 5-Volt reference voltage. When the crankcase pressure is low, the sensor signal voltage is low. When the crankcase pressure is high, the sensor signal voltage is near

the 5-Volt reference voltage. The PCM monitors the crankcase pressure signal circuit voltage to calculate the pressure of the air within the crankcase. The PCM does not illuminate the MIL or ETC lamp for any of the crankcase pressure faults.

WHEN MONITORED:

Ignition on, engine not running.

SET CONDITION:

At key on, engine not running the Crankcase Pressure Sensor reading is higher than a calibrated threshold, or during engine operation the crankcase pressure reading is not changing with engine operating conditions.

POSSIBLE CAUSES

Possible Causes
CRANKCASE VENTED TO ATMOSPHERE
HIGH RESISTANCE IN THE (K926) CRANKCASE PRESSURE SIGNAL CIRCUIT
CRANKCASE PRESSURE SENSOR
POWERTRAIN CONTROL MODULE (PCM)

Always perform the Pre-Diagnostic Troubleshooting procedure before proceeding. Refer to PRE-DIAGNOSTIC TROUBLESHOOTING PROCEDURE - 6.7L .

DIAGNOSTIC TEST

1. **OTHER DTCS**
    1. Turn the ignition on.
    2. Wait five seconds after ignition is turned on.
    3. With the scan tool, read DTCs.

    Is DTC P051D or P051C active?

    Yes

    - Troubleshoot other DTCs first.

    No

    - Go To 2.
2. **CHECK FOR CRANKCASE VENTED TO ATMOSPHERE**
    1. Inspect engine for crankcase leaks of oil or crankcase gases.
    2. Check the valve cover gasket, crankcase breather tube, dipstick tube, block plugs, and oil fill cap.

    Are any leaks found?

Yes

- Repair leaks.
- Perform the POWERTRAIN VERIFICATION TEST - 6.7L. Refer to **POWERTRAIN VERIFICATION TEST - 6.7L** .

No

- Go To 3.

3. **CHECK FOR HIGH RESISTANCE IN THE (K926) CRANKCASE PRESSURE SENSOR SIGNAL CIRCUIT**

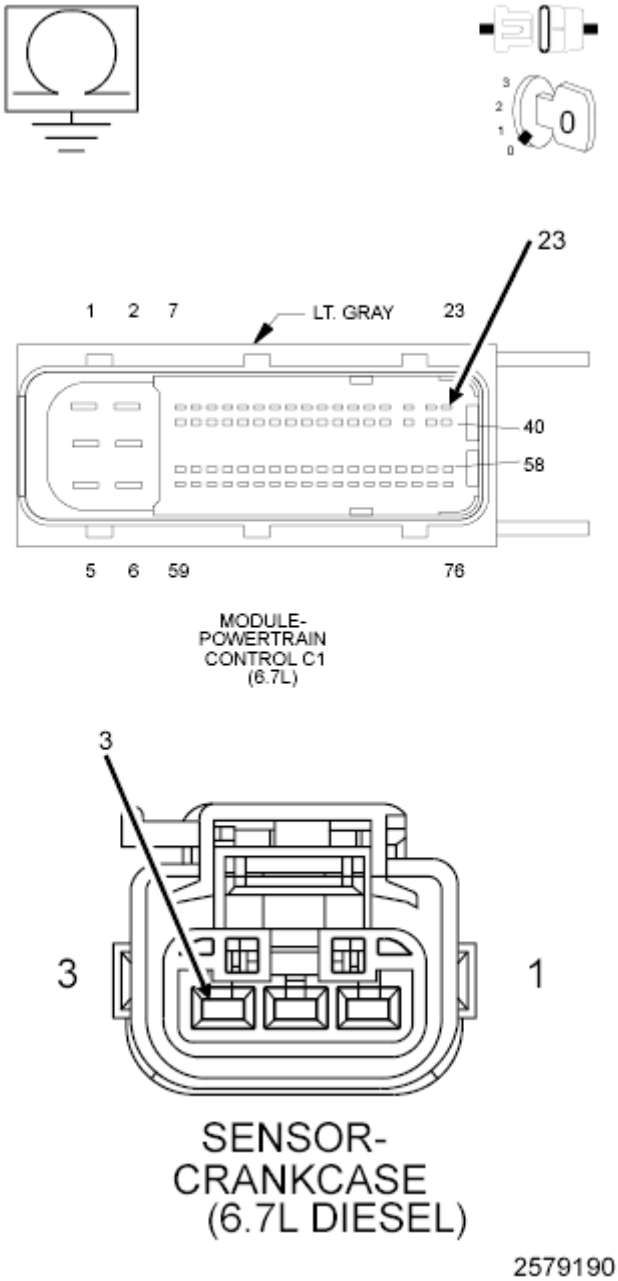

Fig. 35: Checking Crankcase Pressure Signal Circuit For An Open Or High Resistance
Courtesy of CHRYSLER GROUP, LLC

1. Turn the ignition off.
2. Disconnect the Crankcase Pressure Sensor harness connector.
3. Disconnect the PCM C1 harness connector.

NOTE: Check connectors - Clean/repair as necessary.

4. Measure the resistance of the (K926) Crankcase Pressure Signal circuit between the Crankcase

Pressure Sensor harness connector and the PCM C1 harness connector.

Is the resistance below 5.0 Ohms?

Yes

- Go To 4.

No

- Repair the (K926) Crankcase Pressure Signal circuit for an open or high resistance.
- Perform the POWERTRAIN VERIFICATION TEST - 6.7L. Refer to **POWERTRAIN VERIFICATION TEST - 6.7L** .

4. **CHECK THE CRANKCASE PRESSURE SENSOR**
   1. Reconnect the PCM C1 harness connector.
   2. Turn the ignition on.
   3. Connect a jumper between the (F855) 5-Volt Supply circuit and the (K926) Crankcase Pressure Sensor Signal circuit at the Crankcase Pressure Sensor harness connector.
   4. With the scan tool, read DTCs.

   Is DTC P051C active?

   Yes

   - Replace the Crankcase Pressure Sensor in accordance with the service information.
   - Perform the POWERTRAIN VERIFICATION TEST - 6.7L. Refer to **POWERTRAIN VERIFICATION TEST - 6.7L** .

   No

   - Replace the Powertrain Control Module in accordance with the Service Information.
   - Perform the POWERTRAIN VERIFICATION TEST - 6.7L. Refer to **POWERTRAIN VERIFICATION TEST - 6.7L** .

P051C-CRANKCASE PRESSURE SENSOR CIRCUIT LOW

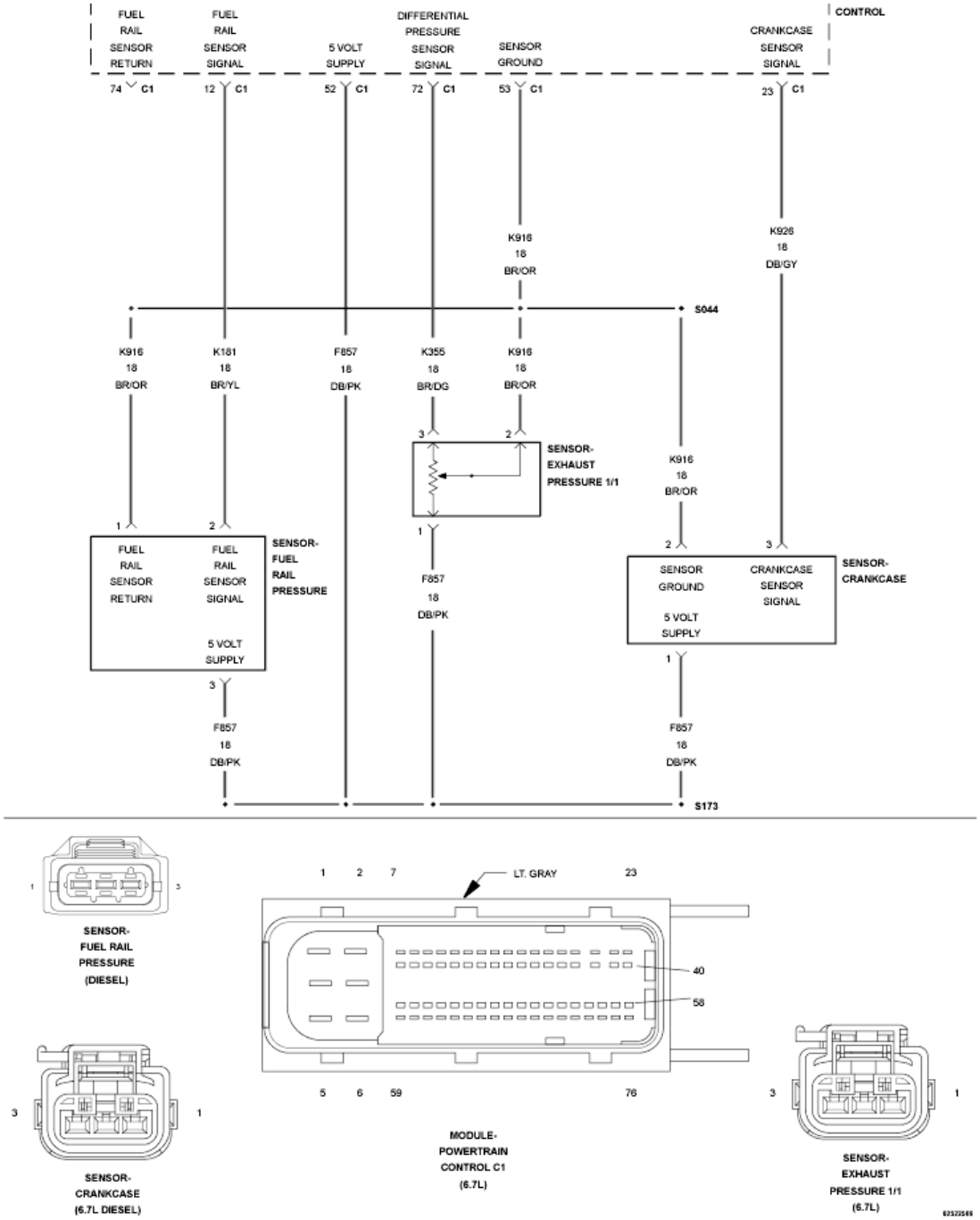

Fig. 36: Fuel Rail Pressure, Exhaust Pressure, & Crankcase Sensor Circuit Schematic
Courtesy of CHRYSLER GROUP, LLC

For a complete wiring diagram, **refer to appropriate SYSTEM WIRING DIAGRAMS article** .

THEORY OF OPERATION

The Crankcase Pressure Sensor is used to monitor the pressure inside the crankcase. The Powertrain Control Module (PCM) supplies the Crankcase Pressure Sensor a 5-Volt reference voltage. When the crankcase pressure is low, the sensor signal voltage is low. When the crankcase pressure is high, the sensor signal voltage

is near the 5-Volt reference voltage. The PCM monitors the Crankcase Pressure Sensor Signal circuit voltage to calculate the pressure of the air within the crankcase. The PCM does not illuminate the MIL or ETC lamp for any of the crankcase pressure faults.

WHEN MONITORED:

Ignition on, engine not running.

SET CONDITION:

At key on, engine not running the crankcase pressure sensor reading is higher than a calibrated threshold.

POSSIBLE CAUSES

Possible Causes
(F857) 5-VOLT SUPPLY CIRCUIT OPEN/HIGH RESISTANCE
(F857) 5-VOLT SUPPLY CIRCUIT SHORTED TO GROUND
(F857) 5-VOLT SUPPLY CIRCUIT SHORTED TO THE (K916) SENSOR GROUND
(K926) CRANKCASE PRESSURE SIGNAL CIRCUIT OPEN/HIGH RESISTANCE
(K926) CRANKCASE PRESSURE SIGNAL CIRCUIT SHORTED TO GROUND
(K926) CRANKCASE PRESSURE SIGNAL CIRCUIT SHORTED TO THE (K916) SENSOR GROUND CIRCUIT
CRANKCASE PRESSURE SENSOR
POWERTRAIN CONTROL MODULE (PCM)

Always perform the Pre-Diagnostic Troubleshooting procedure before proceeding. Refer to PRE-DIAGNOSTIC TROUBLESHOOTING PROCEDURE - 6.7L .

DIAGNOSTIC TEST

1. **OTHER DTCS**
    1. Ignition on, engine not running.
    2. With the scan tool, read DTCs.

    Are there any 5-Volt Reference DTCs present?

    Yes

    - Repair the 5-Volt Reference DTCs before proceeding.
    - Perform the POWERTRAIN VERIFICATION TEST - 6.7L. Refer to **POWERTRAIN VERIFICATION TEST - 6.7L** .

    No

    - Go To 2.

2. **P051C ACTIVE**

   Is DTC P051C active?

   Yes

   - Go To 3.

   No

   - Perform the INTERMITTENT CONDITION diagnostic procedure. Refer to **INTERMITTENT CONDITION - 6.7L** .

3. **CHECK THE (F857) 5-VOLT SUPPLY CIRCUIT**
   1. Turn the ignition off.
   2. Disconnect the Crankcase Pressure Sensor harness connector.

      NOTE: Check connectors - Clean/repair as necessary.

   3. Turn the ignition on.
   4. Measure the voltage across the (F857) 5-Volt Supply circuit and the (K916) Sensor Return circuit at the Crankcase Pressure Sensor harness connector.

      Is the voltage between 4.9 and 5.1 Volts?

      Yes

      - Go To 4.

      No

      - Repair the (F857) 5-Volt Supply circuit for an open or high resistance.
      - Perform the POWERTRAIN VERIFICATION TEST - 6.7L. Refer to **POWERTRAIN VERIFICATION TEST - 6.7L** .

4. **CHECK THE CRANKCASE PRESSURE SENSOR**

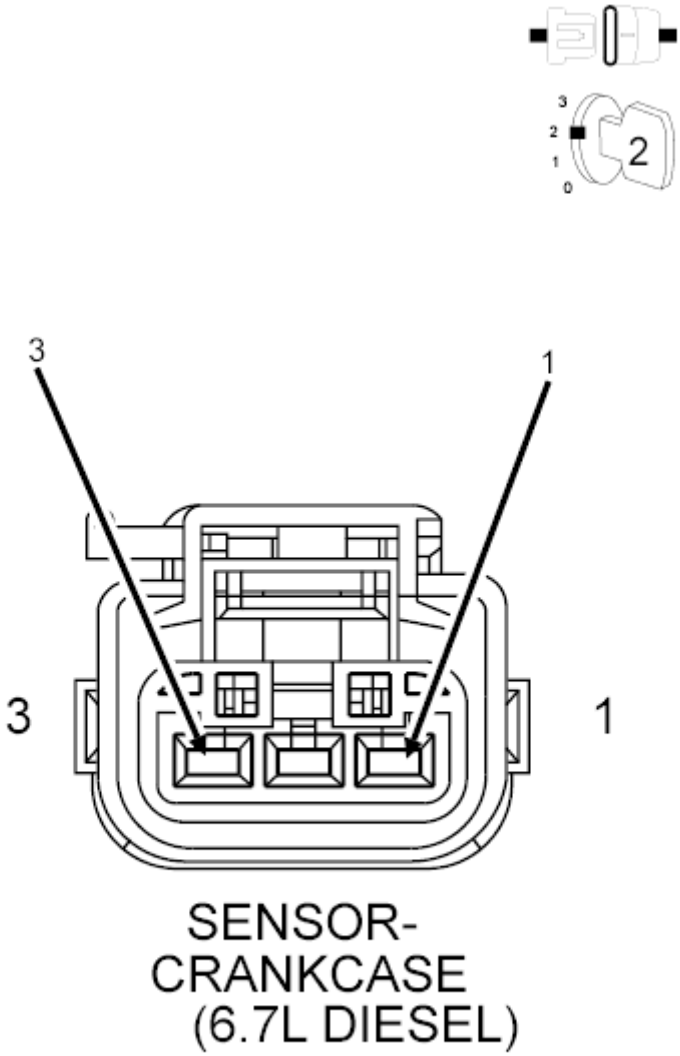

Fig. 37: Crankcase Pressure Sensor Harness Connector
Courtesy of CHRYSLER GROUP, LLC

1. While monitoring scan tool, connect a jumper between the (F857) 5-Volt Supply circuit and the (K926) Crankcase Pressure Sensor Signal circuit at the Crankcase Pressure Sensor harness connector.

   Does the scan tool display DTC P051D as active or pending and P051C as stored with the jumper in place?

   Yes

   - Replace the Crankcase Pressure Sensor in accordance with the service information.
   - Perform the POWERTRAIN VERIFICATION TEST - 6.7L. Refer to **POWERTRAIN**

VERIFICATION TEST - 6.7L .

No

- Go To 5.

5. **CHECK FOR THE (K926) CRANKCASE PRESSURE SENSOR SIGNAL CIRCUIT SHORTED TO THE (K916) SENSOR GROUND CIRCUIT**

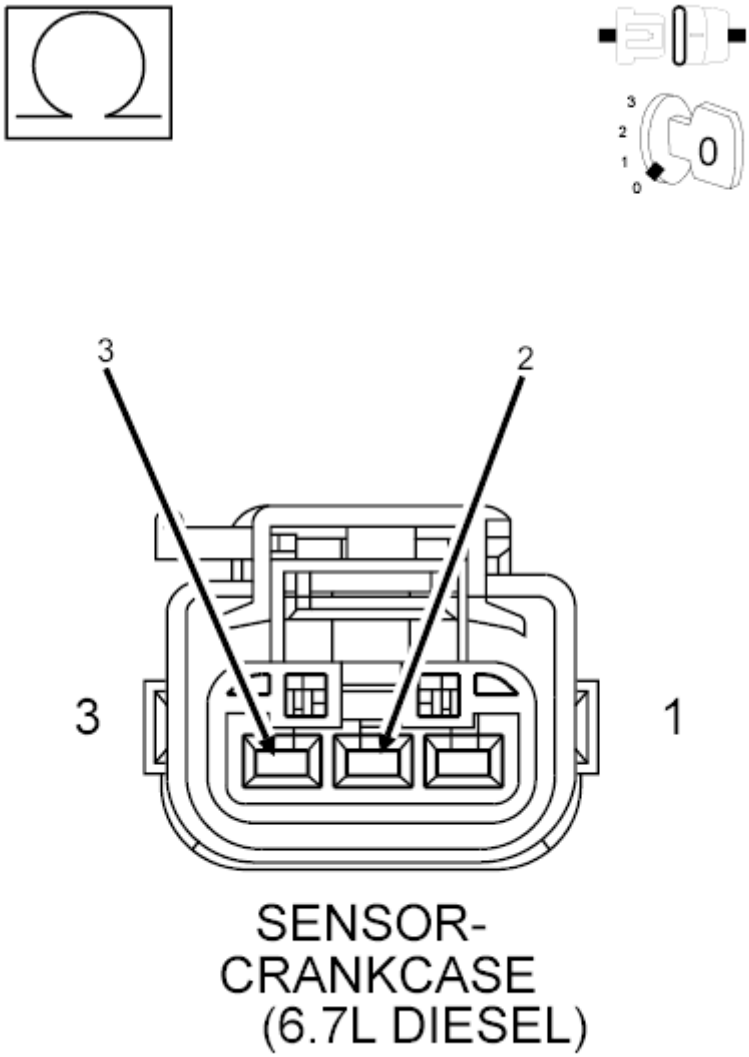

Fig. 38: Checking For Crankcase Pressure Signal Circuit Shorted To Sensor Return Circuit
Courtesy of CHRYSLER GROUP, LLC

1. Turn the ignition off.
2. Remove the jumper.
3. Disconnect the PCM C1 harness connector.

NOTE: Check connectors - Clean/repair as necessary.

4. Measure the resistance between the (K926) Crankcase Pressure Sensor Signal circuit and (K916) Sensor Ground circuit in the Crankcase Pressure Sensor harness connector.

   Is the resistance above 10k Ohms?

   Yes

   - Go To 6.

   No

   - Repair the short between the (K926) Crankcase Pressure Sensor Signal circuit and (K916) Sensor Ground circuit.
   - Perform the POWERTRAIN VERIFICATION TEST - 6.7L. Refer to **POWERTRAIN VERIFICATION TEST - 6.7L** .

6. **CHECK THE (K926) CRANKCASE PRESSURE SIGNAL CIRCUIT FOR A SHORT TO GROUND**

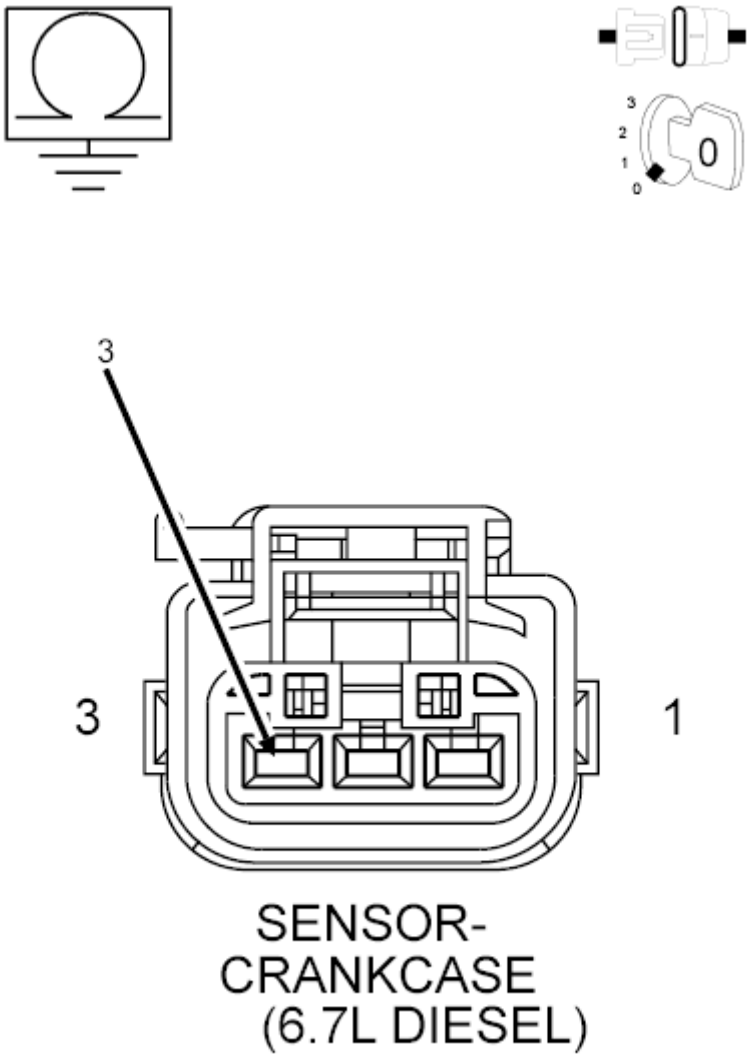

Fig. 39: Checking Crankcase Pressure Signal Circuit For Short To Ground
Courtesy of CHRYSLER GROUP, LLC

1. Measure the resistance between ground and the (K926) Crankcase Pressure Sensor Signal circuit at the Crankcase Pressure Sensor harness connector.

   Is the resistance above 10k Ohms?

   Yes

   - Go To 7.

   No

   - Repair the (K926) Crankcase Pressure Sensor Signal circuit for a short to ground.

- Perform the POWERTRAIN VERIFICATION TEST - 6.7L. Refer to **POWERTRAIN VERIFICATION TEST - 6.7L** .

7. **CHECK THE (K926) CRANKCASE PRESSURE SENSOR SIGNAL CIRCUIT FOR AN OPEN/HIGH RESISTANCE**

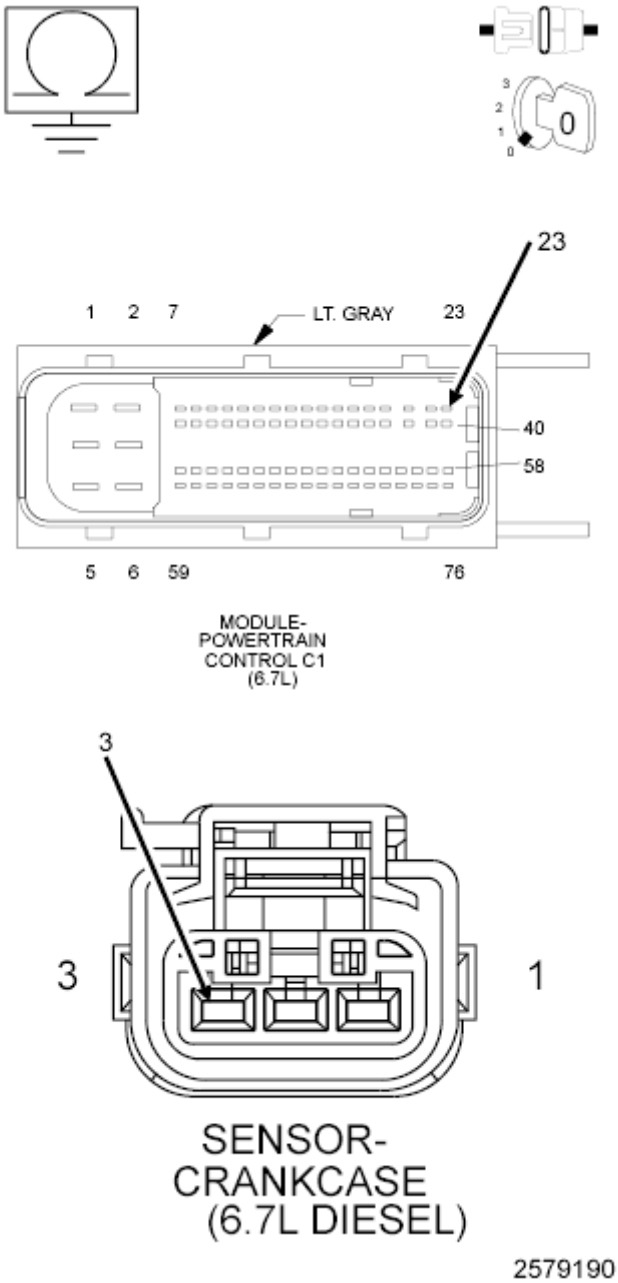

Fig. 40: Checking Crankcase Pressure Signal Circuit For An Open Or High Resistance
Courtesy of CHRYSLER GROUP, LLC

1. Measure the resistance of the (K926) Crankcase Pressure Signal circuit between the Crankcase Pressure Sensor harness connector and the PCM C1 harness connector.

Is the resistance below 5.0 Ohms?

Yes

- Replace the Powertrain Control Module (PCM) in accordance with the service information.
- Perform the POWERTRAIN VERIFICATION TEST - 6.7L. Refer to **POWERTRAIN VERIFICATION TEST - 6.7L** .

No

- Repair the (K926) Crankcase Pressure Signal circuit for an open or high resistance.
- Perform the POWERTRAIN VERIFICATION TEST - 6.7L. Refer to **POWERTRAIN VERIFICATION TEST - 6.7L** .

P051D-CRANKCASE PRESSURE SENSOR CIRCUIT HIGH

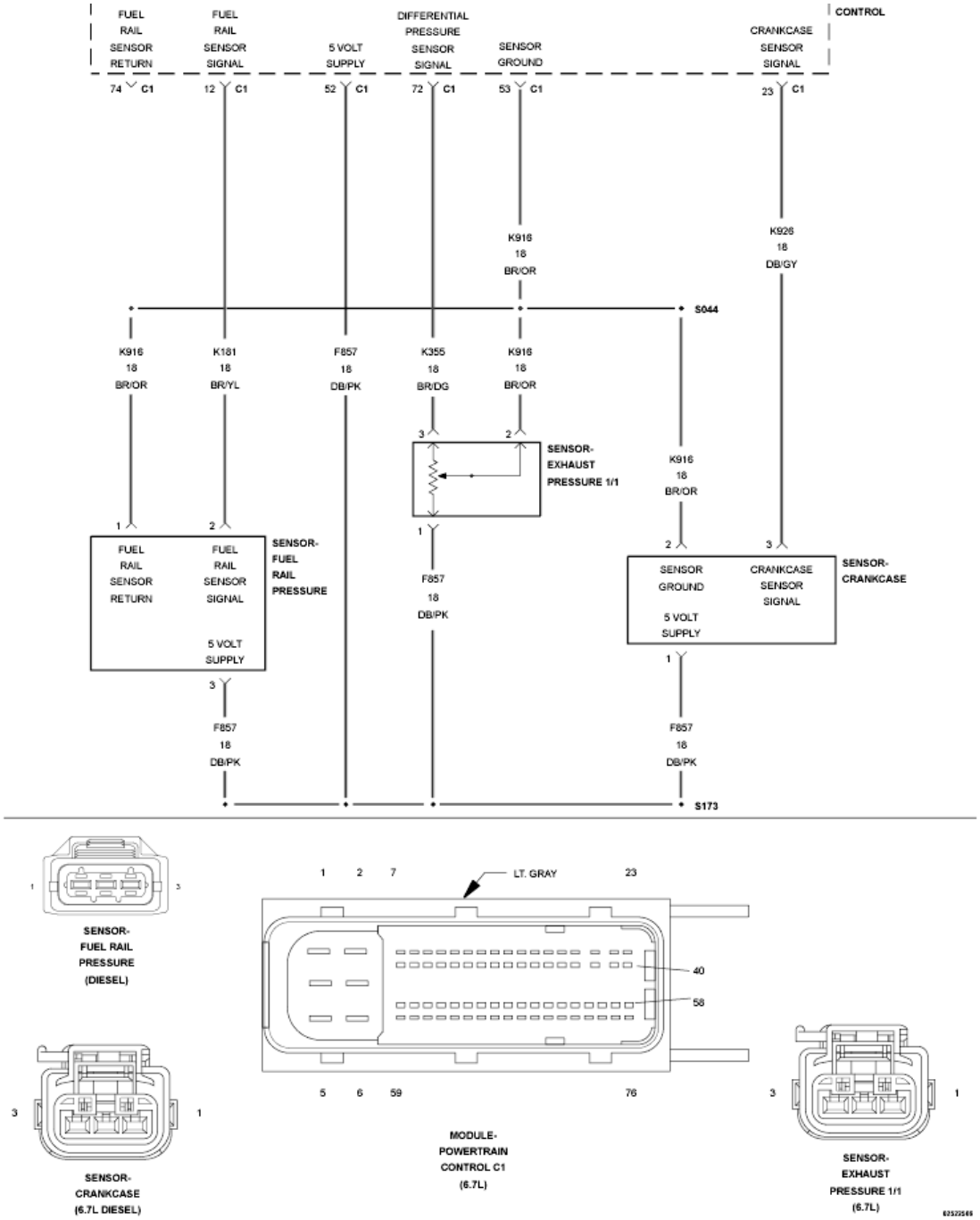

Fig. 41: Fuel Rail Pressure, Exhaust Pressure, & Crankcase Sensor Circuit Schematic
Courtesy of CHRYSLER GROUP, LLC

For a complete wiring diagram, **refer to appropriate SYSTEM WIRING DIAGRAMS article** .

THEORY OF OPERATION

The Crankcase Pressure Sensor is used to monitor the pressure inside the crankcase. The Powertrain Control Module (PCM) supplies the Crankcase Pressure Sensor a 5-Volt reference voltage. When the crankcase pressure is low, the sensor signal voltage is low. When the crankcase pressure is high, the sensor signal voltage

is near the 5-Volt reference voltage. The PCM monitors the Crankcase Pressure Sensor Signal circuit voltage to calculate the pressure of the air within the crankcase. The PCM does not illuminate the MIL or ETC lamp for any of the crankcase pressure faults.

WHEN MONITORED:

Ignition on, engine not running.

SET CONDITION:

The circuit voltage to the PCM is above a calibrated threshold for a certain period of time.

POSSIBLE CAUSES

Possible Causes
(F857) 5-VOLT SUPPLY CIRCUIT SHORTED TO BATTERY VOLTAGE
(K926) CRANKCASE PRESSURE SIGNAL CIRCUIT SHORTED TO VOLTAGE
(K926) CRANKCASE PRESSURE SIGNAL CIRCUIT SHORTED TO THE (F857) 5-VOLT SUPPLY CIRCUIT
(K916) SENSOR GROUND CIRCUIT OPEN/HIGH RESISTANCE
CRANKCASE PRESSURE SENSOR
ENGINE CONTROL MODULE (ECM)

Always perform the Pre-Diagnostic Troubleshooting procedure before proceeding. Refer to PRE-DIAGNOSTIC TROUBLESHOOTING PROCEDURE - 6.7L .

DIAGNOSTIC TEST

1. **OTHER DTCS**
    1. Ignition on, engine not running.
    2. With the scan tool, read DTCs.

    Are there any 5-Volt Reference DTCs ?

    Yes

    - Repair other DTCs first.

    No

    - Go To 2.
2. **P051D ACTIVE**

    Is DTC P051D active?

    Yes

- Go To 3.

No

- Perform the INTERMITTENT CONDITION diagnostic procedure. Refer to **INTERMITTENT CONDITION - 6.7L** .

3. **CHECK FOR THE (K926) CRANKCASE PRESSURE SENSOR SIGNAL CIRCUIT SHORTED TO ANOTHER CIRCUIT**
   1. Turn the ignition off.
   2. Disconnect the Crankcase Pressure Sensor harness connector.
   3. Disconnect the PCM C1 harness connector.

      NOTE: Check connectors - Clean/repair as necessary.

   4. Measure the resistance between the (K926) Crankcase Pressure Sensor Signal circuit and all other circuits of the PCM C1 harness connector.

      Is the resistance below 10k Ohms between the (K926) Crankcase Pressure Sensor Signal circuit and all other circuits?

      Yes

      - Repair the (K926) Crankcase Pressure Sensor Signal circuit for a short to the circuit that measured below 10k Ohms.
      - Perform the POWERTRAIN VERIFICATION TEST - 6.7L. Refer to **POWERTRAIN VERIFICATION TEST - 6.7L** .

      No

      - Go To 4.

4. **CHECK THE (K916) SENSOR GROUND CIRCUIT FOR AN OPEN/HIGH RESISTANCE**

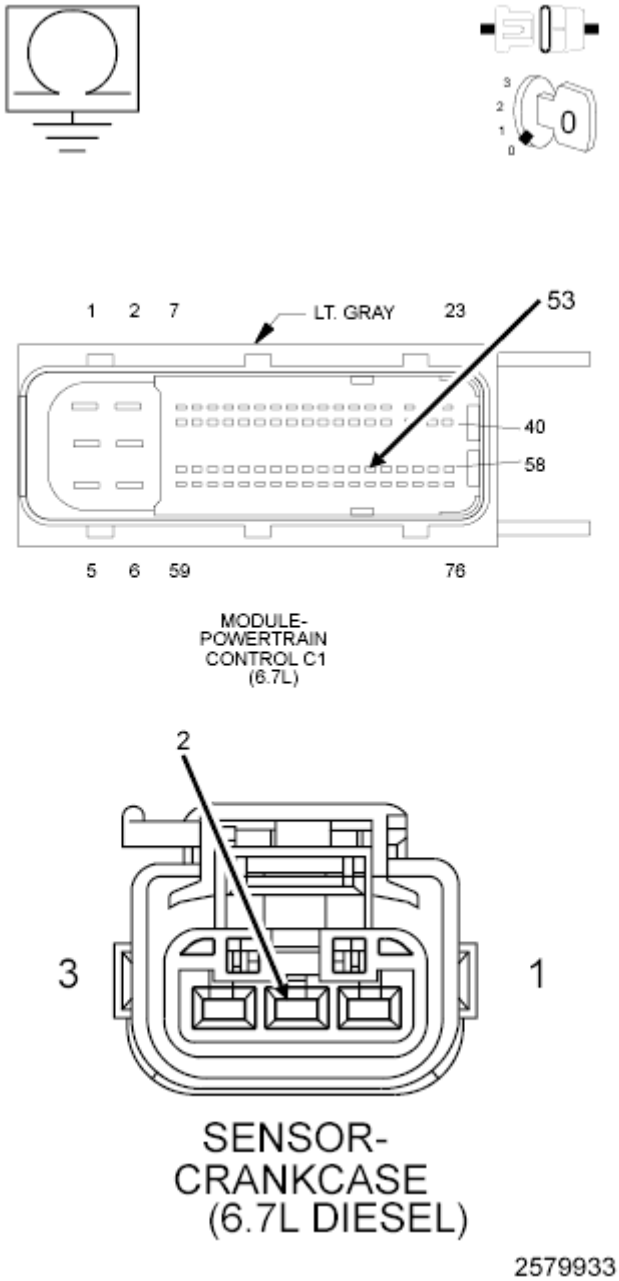

Fig. 42: Checking Sensor Return Circuit For An Open Or High Resistance
Courtesy of CHRYSLER GROUP, LLC

1. Measure the resistance of the (K916) Sensor Ground circuit between the Crankcase Pressure Sensor harness connector and the PCM C1 harness connector.

   Is the resistance below 5.0 Ohms?

   Yes

   - Go To 5.

No

- Repair the (K916) Sensor Ground circuit for an open or high resistance.
- Perform the POWERTRAIN VERIFICATION TEST - 6.7L. Refer to **POWERTRAIN VERIFICATION TEST - 6.7L** .

5. **CHECK THE CRANKCASE PRESSURE SENSOR**
   1. Reconnect the Crankcase Pressure Sensor harness connector.
   2. Reconnect the PCM C1 harness connector.
   3. Turn the ignition on.
   4. While monitoring the scan tool, disconnect the Crankcase Pressure Sensor harness connector.

   Does the scan tool display P051C Crankcase Pressure Sensor low DTC as active or pending?

   Yes

   - Replace the Crankcase Pressure Sensor in accordance with the service information.
   - Perform the POWERTRAIN VERIFICATION TEST - 6.7L. Refer to **POWERTRAIN VERIFICATION TEST - 6.7L** .

   No

   - Replace the Powertrain Control Module in accordance with the service information.
   - Perform the POWERTRAIN VERIFICATION TEST - 6.7L. Refer to **POWERTRAIN VERIFICATION TEST - 6.7L** .

P0521-ENGINE OIL PRESSURE SENSOR PERFORMANCE

For a complete wiring diagram, **refer to appropriate SYSTEM WIRING DIAGRAMS article** .

THEORY OF OPERATION

The Engine Oil Pressure Switch is used by the Powertrain Control Module (PCM) to monitor the lubricating oil pressure. The Oil Pressure Switch is normally closed when the engine is not running or oil pressure drops below the engine protection limit, and open when oil pressure is present. This monitor checks for the Oil Pressure Switch state to change from open to closed in a calibrated period of time after the engine is turned off. When the fault is set, the PCM illuminates the oil pressure lamp on the Vehicle Information Center. The PCM will turn off the oil pressure lamp after the diagnostic runs and passes on the next key cycle.

WHEN MONITORED:

This monitor runs for a calibrated amount of time after the engine speed reaches zero.

SET CONDITION:

The Oil Pressure Switch is in a closed state after a calibrated amount of time with the engine speed equal zero.

POSSIBLE CAUSES

Possible Causes
ENGINE OIL PRESSURE SWITCH
ENGINE OIL PRESSURE SWITCH (G6) SIGNAL CIRCUIT OPEN
POWERTRAIN CONTROL MODULE (PCM)

Always perform the Pre-Diagnostic Troubleshooting procedure before proceeding. Refer to PRE-DIAGNOSTIC TROUBLESHOOTING PROCEDURE - 6.7L .

DIAGNOSTIC TEST

1. **CHECK THE ENGINE OIL PRESSURE (EOP) SWITCH**
   1. Turn the ignition off.
   2. Disconnect the Engine Oil Pressure (EOP) Switch harness connector.

      NOTE: Check connectors - Clean/repair as necessary.

   3. Measure the resistance between the EOP (G6) Signal circuit terminal and ground at the Engine Oil Pressure Switch.

      Is the resistance below 5.0 Ohms?

      Yes

      - Go To 2.

      No

      - Replace the Engine Oil Pressure Switch in accordance with the service information.
      - Perform the POWERTRAIN VERIFICATION TEST - 6.7L. Refer to **POWERTRAIN VERIFICATION TEST - 6.7L** .
2. **CHECK THE EOP (G6) SIGNAL CIRCUIT OPEN/HIGH RESISTANCE**
   1. Disconnect the C1 PCM harness connector.

      NOTE: Check connectors - Clean/repair as necessary.

   2. Measure the resistance of the (G6) EOP Signal Circuit between the Engine Oil Pressure Switch harness connector and the PCM C1 harness connector.

      Is the resistance below 5.0 Ohms?

      Yes

      - Go To 3.

No

- Repair the (G6) EOP Signal Circuit for an open or high resistance.
- Perform the POWERTRAIN VERIFICATION TEST - 6.7L. Refer to **POWERTRAIN VERIFICATION TEST - 6.7L** .

3. **POWERTRAIN CONTROL MODULE**

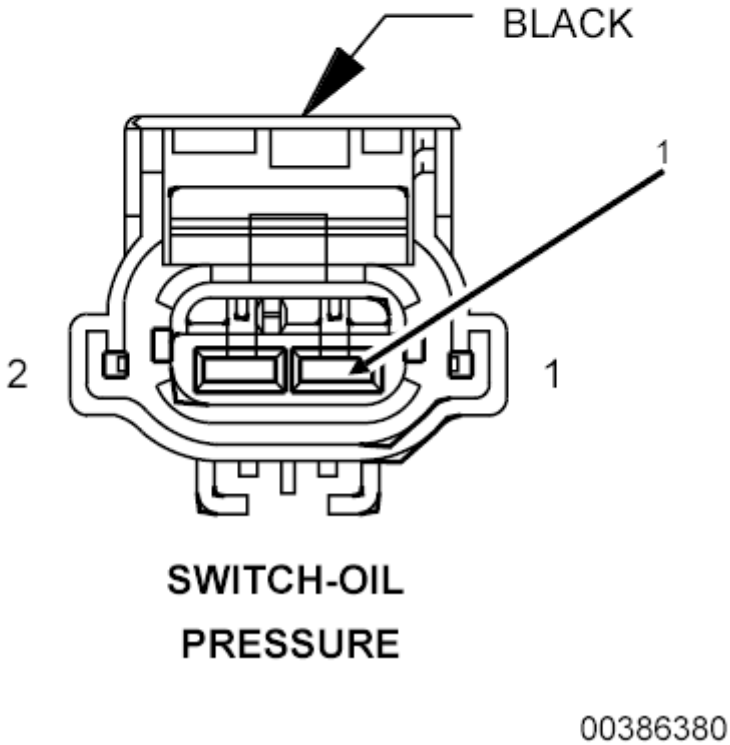

Fig. 43: Oil Pressure Switch Connector Pin ID
Courtesy of CHRYSLER GROUP, LLC

1. Reconnect the C1 PCM harness connector.
2. Engine Oil Pressure Switch still disconnected.
3. Turn the ignition on.
4. Measure the voltage between ground and the (G6) EOP Signal circuit at the Engine Oil Pressure Switch harness connector.

   Is the voltage between 4.5 and 5.5 Volts?

   Yes

   - Perform the INTERMITTENT CONDITION diagnostic procedure. Refer to **INTERMITTENT CONDITION - 6.7L** .

   No

   - Replace the Powertrain Control Module in accordance with the service information.
   - Perform the POWERTRAIN VERIFICATION TEST - 6.7L. Refer to **POWERTRAIN VERIFICATION TEST - 6.7L** .

P0524-ENGINE OIL PRESSURE SENSOR CIRCUIT LOW

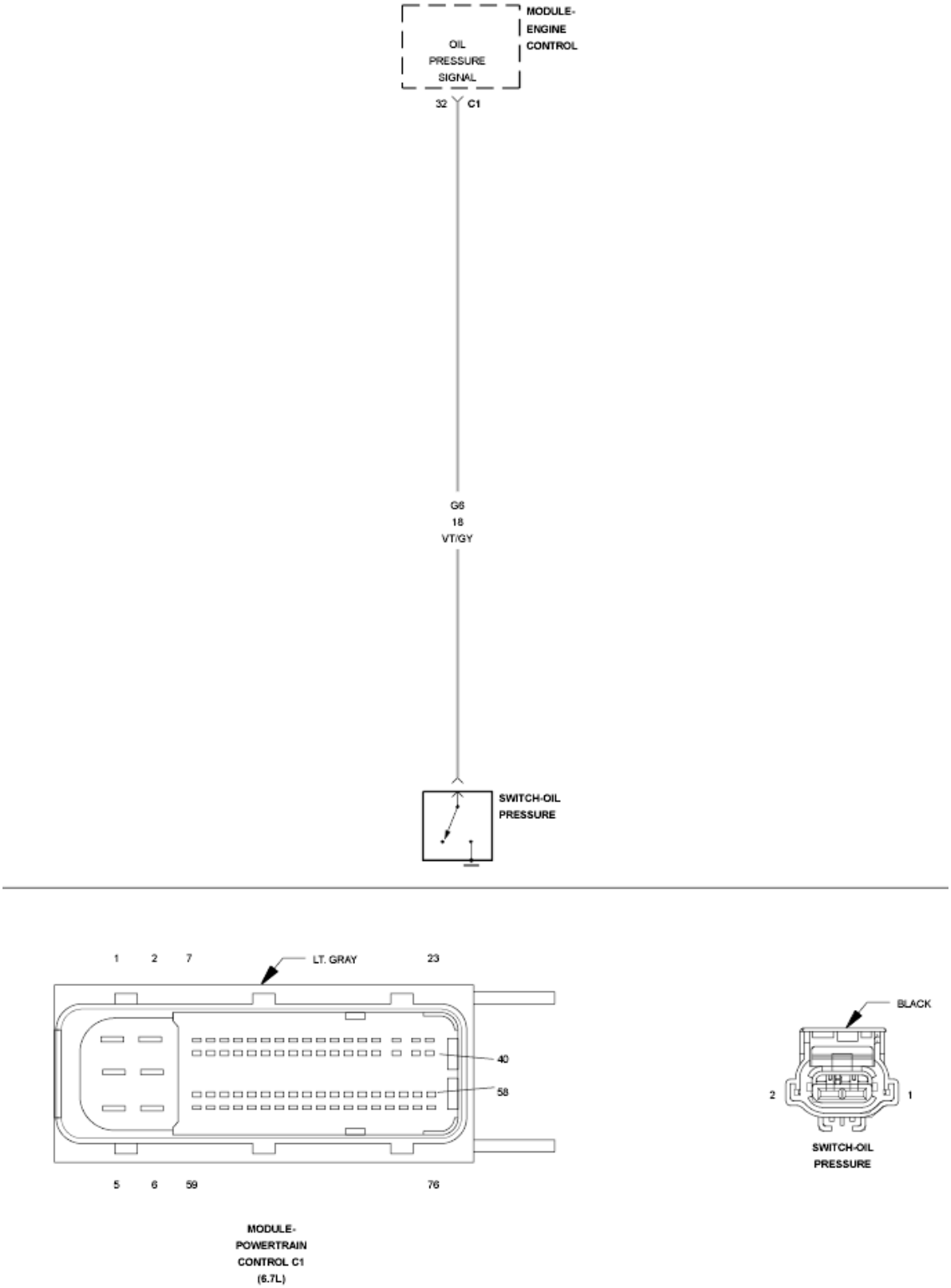

Fig. 44: Engine Oil Pressure Switch Circuit Schematic
Courtesy of CHRYSLER GROUP, LLC

For a complete wiring diagram, **refer to appropriate SYSTEM WIRING DIAGRAMS article** .

THEORY OF OPERATION

The Engine Oil Pressure (EOP) Switch is used by the Powertrain Control Module (PCM) to monitor the lubricating oil pressure. If the oil pressure drops below the engine protection limit, the switch will close and cause the fault to log. The Oil Pressure Switch is normally closed when the engine is not running and open when oil pressure is present. When the fault is set, the PCM illuminates the MIL light. The PCM will turn off the MIL light after the diagnostic runs and passes in four consecutive drive cycles.

WHEN MONITORED:

While the engine is running.

SET CONDITION:

The oil pressure detected by the PCM is less than a calibrated value.

POSSIBLE CAUSES

Possible Causes
LOW OIL LEVEL
EOP (G6) SIGNAL CIRCUIT SHORT TO GROUND
OIL PRESSURE SWITCH
INTERNAL ENGINE DAMAGE

Always perform the Pre-Diagnostic Troubleshooting procedure before proceeding. Refer to PRE-DIAGNOSTIC TROUBLESHOOTING PROCEDURE - 6.7L .

DIAGNOSTIC TEST

1. **DTC ACTIVE**

   NOTE: Verify that the engine oil is at the proper level before continuing.

   1. Turn the ignition on.
   2. With the scan tool, erase DTCs.
   3. Turn the ignition off for 75 seconds.
   4. Start the engine and let idle.
   5. With the scan tool, read DTCs.

   Did the DTC reset?

   Yes

   - Go To 2.

   No

- Perform the INTERMITTENT CONDITION diagnostic procedure. Refer to **INTERMITTENT CONDITION - 6.7L** .

2. **CHECK THE EOP (G6) SIGNAL CIRCUIT FOR A SHORT TO GROUND**
   1. Turn the ignition off.
   2. Disconnect the EOP Switch harness connector.
   3. Turn the ignition on.

   Did the DTC reset?

   Yes

   - Go To 3.

   No

   - Repair the (G6) Oil Pressure Switch Signal circuit for a short to ground.
   - Perform the POWERTRAIN VERIFICATION TEST - 6.7L. Refer to **POWERTRAIN VERIFICATION TEST - 6.7L** .
3. **CHECK THE OIL PRESSURE SWITCH**
   1. Measure the engine oil pressure with a mechanical gauge.

   Is the oil pressure within the acceptable operating range?

   Yes

   - Replace the Oil Pressure Switch in accordance with the service information.
   - Perform the POWERTRAIN VERIFICATION TEST - 6.7L. Refer to **POWERTRAIN VERIFICATION TEST - 6.7L** .

   No

   - Repair internal engine damage.
   - Perform the POWERTRAIN VERIFICATION TEST - 6.7L. Refer to **POWERTRAIN VERIFICATION TEST - 6.7L** .

P0532-A/C PRESSURE SENSOR CIRCUIT LOW

For a complete wiring diagram, **refer to appropriate SYSTEM WIRING DIAGRAMS article** .

THEORY OF OPERATION

The Powertrain Control Module (PCM) receives various information from the operator controls and engine sensor inputs to determine when the A/C Compressor Clutch should be turned on. The Totally Integrated Power Module (TIPM) receives a signal from the PCM to turn on the A/C Compressor Clutch. The A/C Pressure Sensor information is an input to the TIPM. The TIPM uses the A/C Pressure Sensor input signal to determine if

the A/C Compressor Clutch should be turned on. The TIPM supplies 12-Volts to the A/C compressor clutch which has a dedicated ground circuit. You will not receive a MIL lamp for this fault, but the customer may complain of poor A/C performance.

WHEN MONITORED:

With the ignition on and battery voltage greater than 10.4 Volts.

SET CONDITION:

The circuit voltage to the TIPM falls below 0.25 Volts for five seconds.

POSSIBLE CAUSES

Possible Causes
(C818) 5-VOLT SUPPLY CIRCUIT OPEN/HIGH RESISTANCE
(C818) 5-VOLT SUPPLY CIRCUIT SHORTED TO GROUND
(C18) A/C PRESSURE SENSOR SIGNAL CIRCUIT SHORTED TO GROUND
(C18) A/C PRESSURE SENSOR SIGNAL CIRCUIT SHORTED TO THE (C918) A/C PRESSURE SENSOR RETURN
(C18) A/C PRESSURE SENSOR SIGNAL CIRCUIT OPEN/HIGH RESISTANCE
A/C PRESSURE SENSOR
TOTALLY INTEGRATED POWER MODULE (TIPM)

Always perform the Pre-Diagnostic Troubleshooting procedure before proceeding. Refer to PRE-DIAGNOSTIC TROUBLESHOOTING PROCEDURE - 6.7L .

DIAGNOSTIC TEST

1. **ACTIVE DTC**

NOTE: **If any 5-Volt supply DTCs are present, repair those DTCs before proceeding with this test.**

1. Turn the ignition on.
2. With the scan tool, record all Freeze frame data.
3. With the scan tool, erase DTCs.
4. Turn the ignition off for 75 seconds.
5. Turn the ignition on.
6. With the scan tool, read DTCs.

Did the DTC reset?

Yes

- Go To 2.

No

- Perform the INTERMITTENT CONDITION diagnostic procedure. Refer to **INTERMITTENT CONDITION - 6.7L** .

2. **CHECK THE (C18) A/C PRESSURE SENSOR SIGNAL CIRCUIT FOR A SHORT TO GROUND**

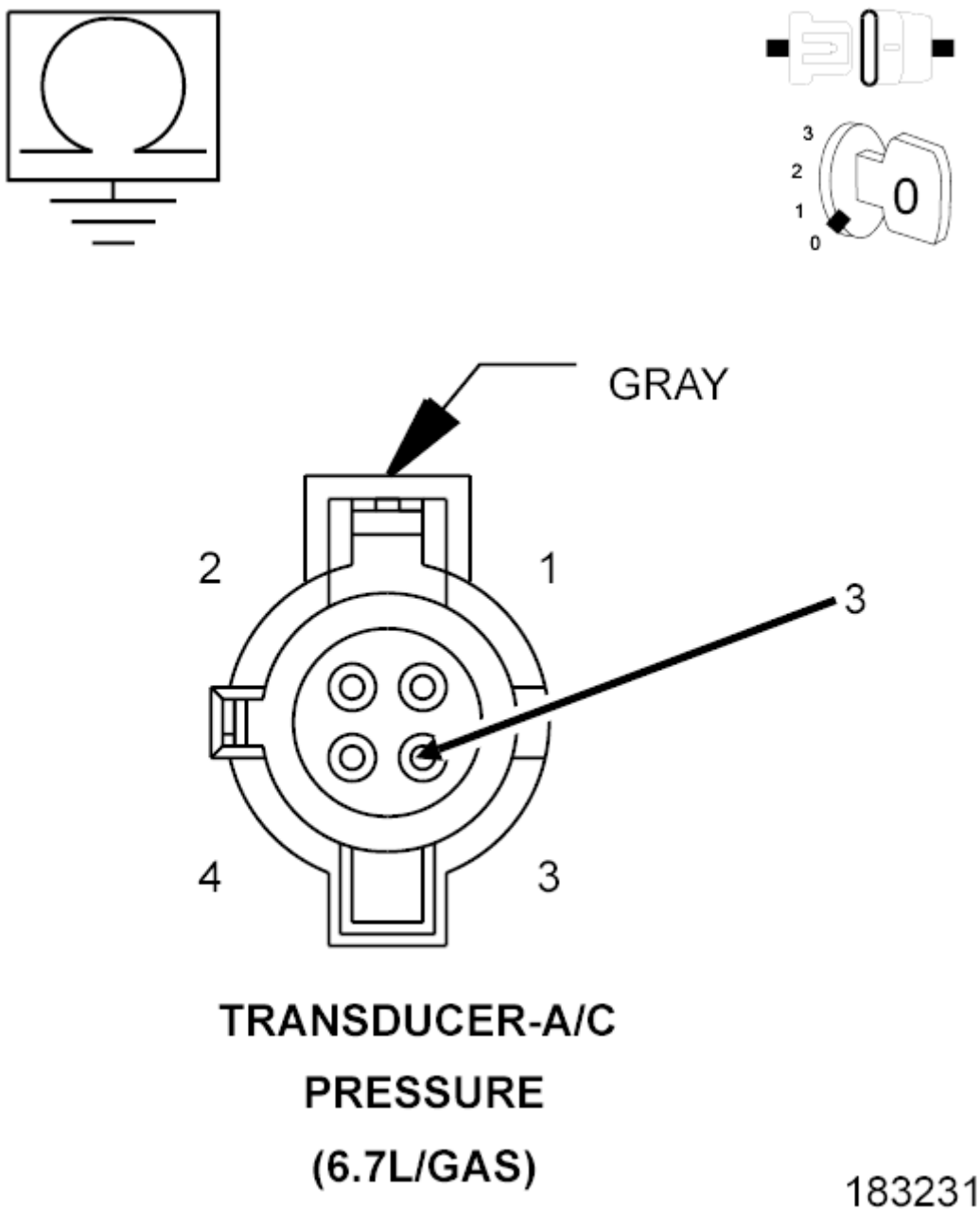

Fig. 45: Checking A/C Pressure Sensor Signal Circuit Shorted To Ground
Courtesy of CHRYSLER GROUP, LLC

1. Turn the ignition off.
2. Disconnect the A/C Pressure Sensor harness connector.
3. Disconnect the TIPM C1 harness connector.

NOTE: Check connectors - Clean/repair as necessary.

4. Measure the resistance between ground and the (C18) A/C Pressure Sensor Signal circuit at the A/C Pressure Sensor harness connector.

   Is the resistance below 10k Ohms?

   Yes

   - Repair the (C18) A/C Pressure Sensor Signal circuit for a short to ground.
   - Perform the POWERTRAIN VERIFICATION TEST - 6.7L. Refer to **POWERTRAIN VERIFICATION TEST - 6.7L** .

   No

   - Go To 3.

3. **CHECK FOR THE (C18) A/C PRESSURE SENSOR SIGNAL CIRCUIT SHORTED TO THE (C918) A/C PRESSURE SENSOR RETURN**
   1. Measure the resistance between the (C18) A/C Pressure Sensor Signal circuit and the (C918) A/C Pressure Sensor Return circuit in the TIPM C1 harness connector.

      Is the resistance below 10k Ohms?

      Yes

      - Repair the short between the (C18) A/C Pressure Sensor Signal circuit and the (C918) A/C Pressure Sensor Return circuit.
      - Perform the POWERTRAIN VERIFICATION TEST - 6.7L. Refer to **POWERTRAIN VERIFICATION TEST - 6.7L** .

      No

      - Go To 4.

4. **CHECK THE (C18) A/C PRESSURE SENSOR SIGNAL CIRCUIT FOR A OPEN/HIGH RESISTANCE**
   1. Measure the resistance of the (C18) A/C Pressure Sensor Signal circuit between the A/C Pressure Sensor harness connector and the TIPM C1 harness connector.

      Is the resistance below 5.0 Ohms?

      Yes

- Go To 5.

No

- Repair the (C18) signal circuit for an open or high resistance.
- Perform the POWERTRAIN VERIFICATION TEST - 6.7L. Refer to **POWERTRAIN VERIFICATION TEST - 6.7L** .

5. **CHECK THE A/C PRESSURE SENSOR**

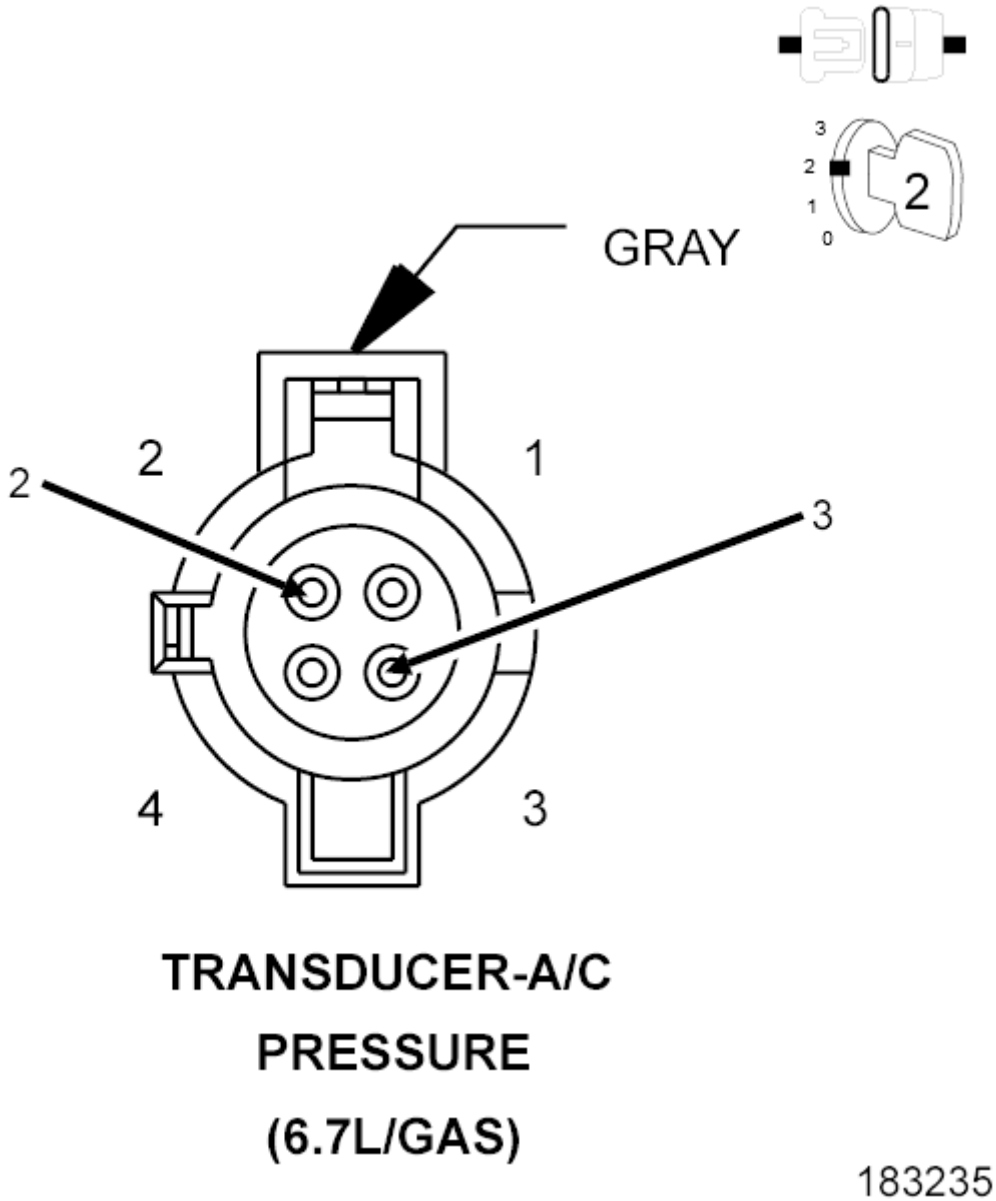

Fig. 46: Checking ECM Sets A/C Pressure Sensor DTC
Courtesy of CHRYSLER GROUP, LLC

1. Turn the ignition on.
2. Reconnect the TIPM C1 harness connector.
3. While monitoring scan tool, connect a jumper between the (C18) A/C Pressure Sensor Signal circuit and the (C918) A/C Pressure Sensor Return circuit at the A/C Pressure Sensor harness connector.

   Did DTC P0533 set?

   Yes

   - Replace the A/C Pressure Sensor in accordance with the service information.
   - Perform the POWERTRAIN VERIFICATION TEST - 6.7L. Refer to **POWERTRAIN VERIFICATION TEST - 6.7L** .

   No

   - Replace the Totally Integrated Power Module in accordance with the service information.
   - Perform the BODY VERIFICATION TEST. Refer to **STANDARD PROCEDURE** .

P0533-A/C PRESSURE SENSOR CIRCUIT HIGH

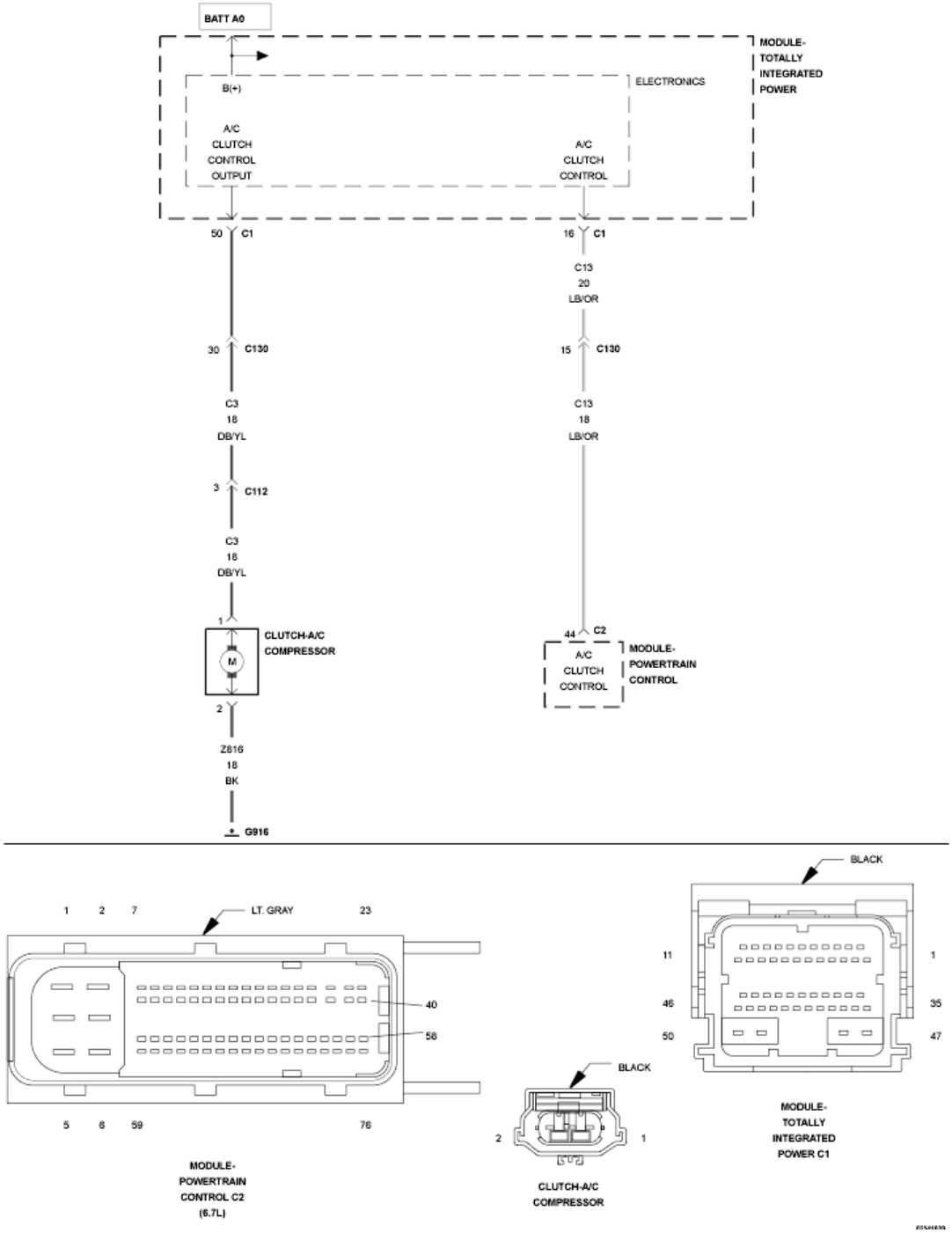

Fig. 47: A/C Compressor Clutch & TIPM Circuit Schematic
Courtesy of CHRYSLER GROUP, LLC

For a complete wiring diagram, **refer to appropriate SYSTEM WIRING DIAGRAMS article** .

THEORY OF OPERATION

The A/C pressure sensor is mounted in the Freon circuit of the A/C system. This sensor monitors the pressure in the system. This pressure information is part of the information the Totally Integrated Power Module (TIPM)

uses to determine if the A/C clutch should turned on or off. This information is also important to protect the Freon compressor from damage. A MIL lamp will not be lit for this fault. The customer may notice poor A/C performance.

WHEN MONITORED:

With the ignition on and battery voltage greater than 10.4 Volts.

SET CONDITION:

The circuit voltage to the Totally Integrated Power Module (TIPM) is above a calibrated threshold for a certain period of time.

POSSIBLE CAUSES

Possible Causes
(C18) SIGNAL CIRCUIT SHORTED TO VOLTAGE
(C818) 5-VOLT SUPPLY CIRCUIT SHORTED TO VOLTAGE
(C918) RETURN CIRCUIT OPEN
A/C PRESSURE TRANSDUCER
TOTALLY INTEGRATED POWER MODULE (TIPM)

Always perform the Pre-Diagnostic Troubleshooting procedure before proceeding. Refer to PRE-DIAGNOSTIC TROUBLESHOOTING PROCEDURE - 6.7L .

DIAGNOSTIC TEST

1. **OTHER DTCS**
    1. Turn the ignition on.
    2. With the scan tool, read DTCs.

       Are other DTCs present?

       Yes

       - Repair other DTCs first.
       - Perform the POWERTRAIN VERIFICATION TEST - 6.7L. Refer to **POWERTRAIN VERIFICATION TEST - 6.7L** .

       No

       - Go To 2.
2. **HARNESS OPEN**

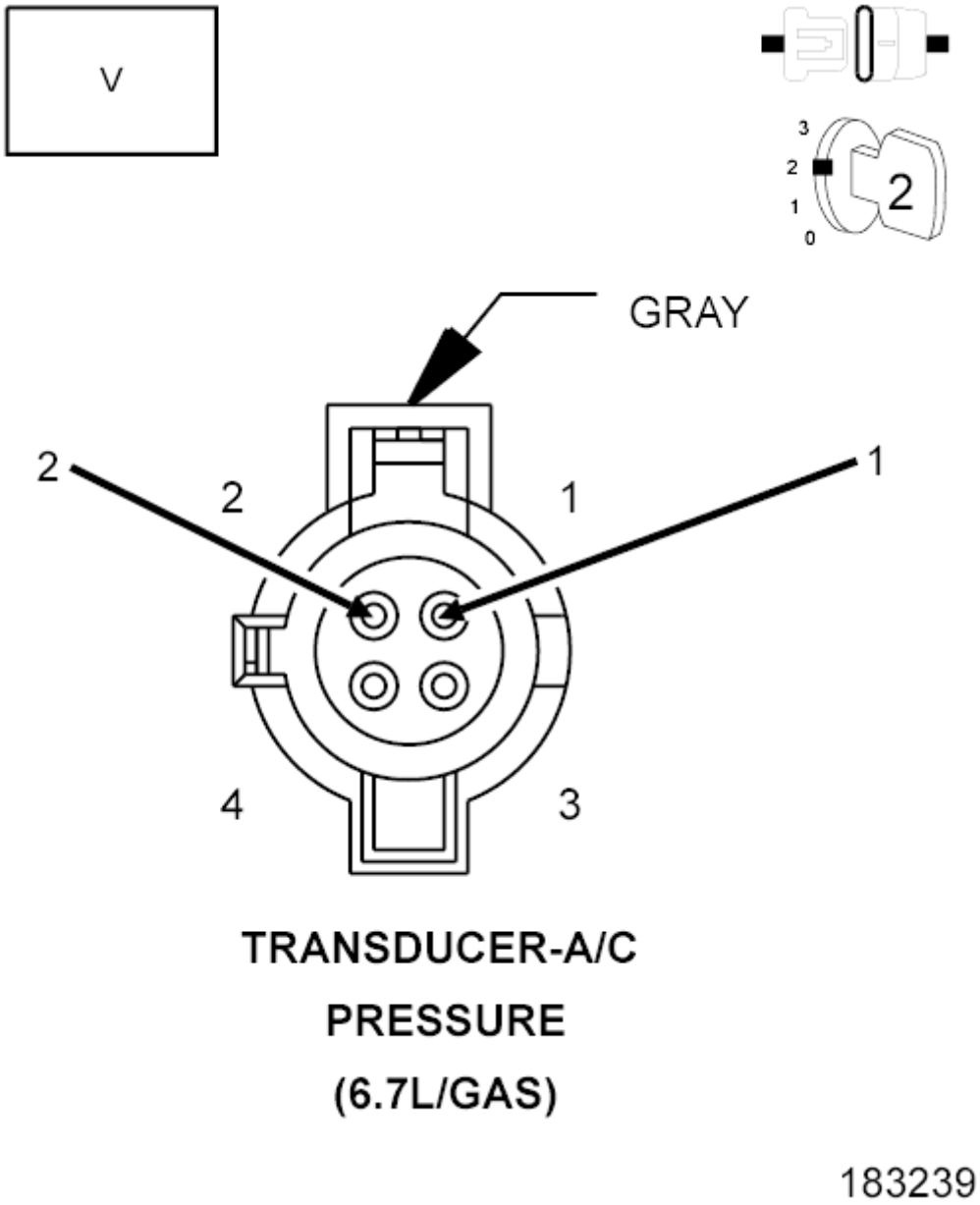

Fig. 48: Measuring Voltage Between 5-Volt Supply Circuit & A/C Pressure Sensor Return Circuit Of A/C Pressure Sensor Harness Connector
Courtesy of CHRYSLER GROUP, LLC

1. Turn the ignition off.
2. Disconnect the A/C Pressure Sensor harness connector.

NOTE: Check connectors - Clean/repair as necessary.

3. Turn the ignition on.
4. Measure the voltage between the (C818) 5-Volt Supply circuit and (C918) A/C Pressure Sensor

Return circuit of the A/C Pressure Sensor harness connector.

Is the voltage between 4.5 and 5.5 volts?

Yes

- Go To 3.

No

- Go To 4.

3. **A/C PRESSURE SENSOR**

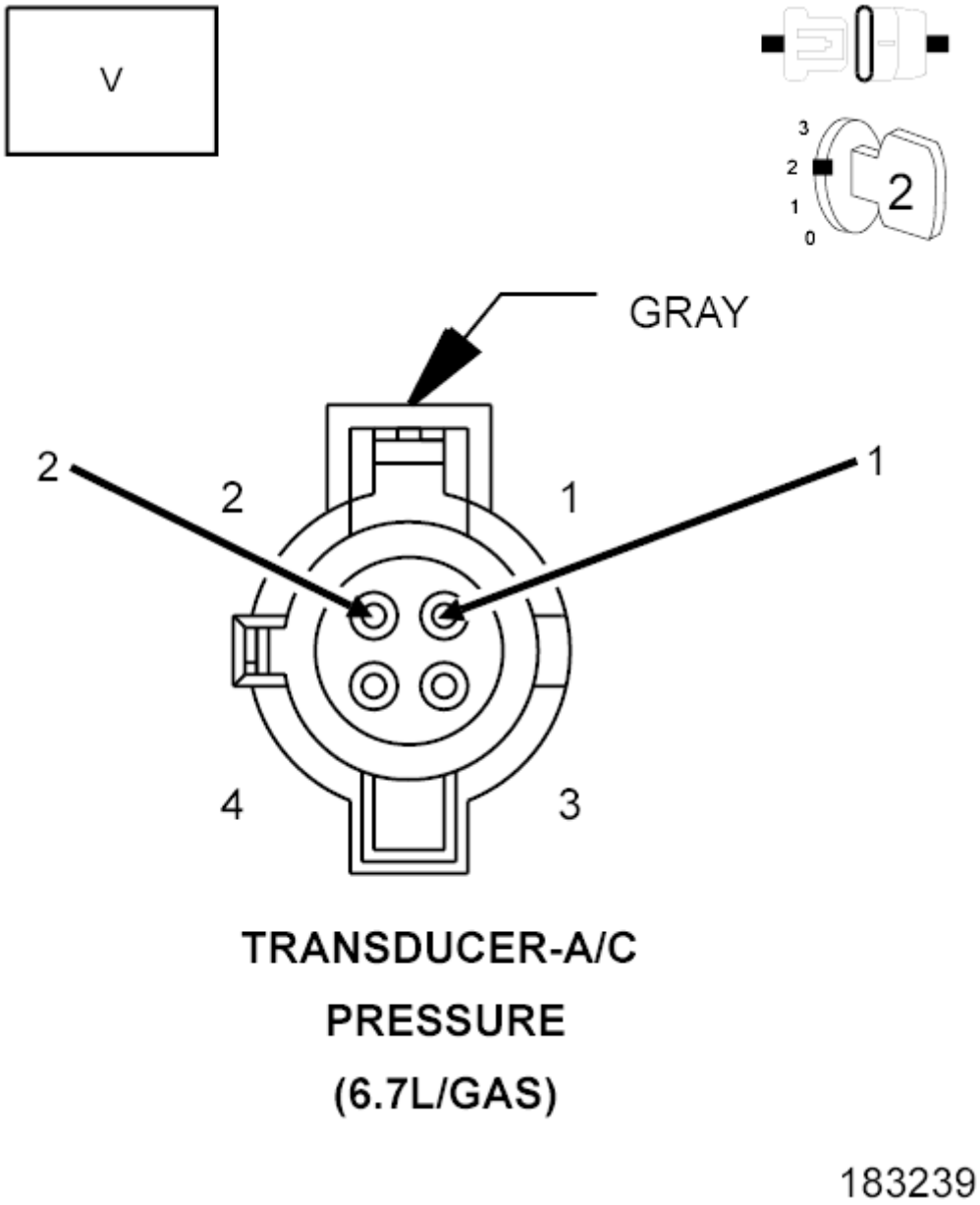

Fig. 49: Measuring Voltage Between 5-Volt Supply Circuit & A/C Pressure Sensor Return Circuit Of A/C Pressure Sensor Harness Connector
Courtesy of CHRYSLER GROUP, LLC

1. While monitoring scan tool, use a jumper wire to connect the (C918) A/C Pressure Sensor Return circuit to the (C18) A/C Pressure Sensor Signal circuit at the A/C Pressure Sensor harness connector.

   Did P0532 set?

   Yes

- Replace the A/C Pressure Sensor.
- Perform the POWERTRAIN VERIFICATION TEST - 6.7L. Refer to **POWERTRAIN VERIFICATION TEST - 6.7L** .

No

- Go To 4.

4. **CHECK THE (C818) 5-VOLT SUPPLY CIRCUIT FOR A SHORT TO VOLTAGE**

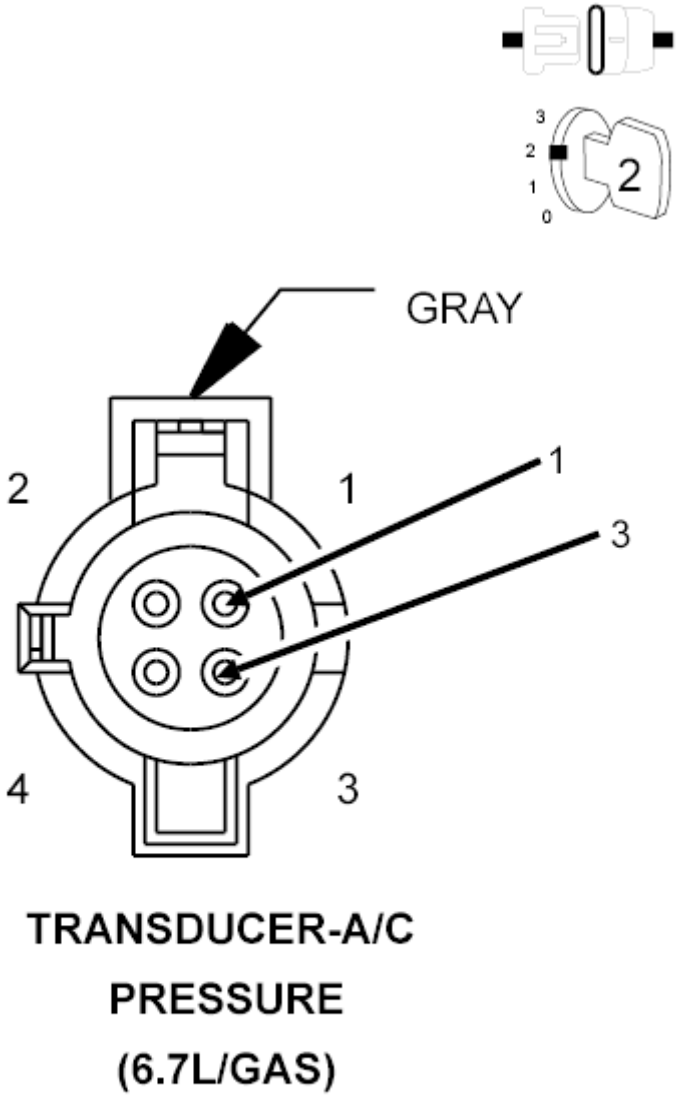

Fig. 50: Checking The Totally Integrated Power Module (TIPM)

1. Turn the ignition off.
2. Disconnect the C1 TIPM harness connectors.

   NOTE: Check connectors - Clean/repair as necessary.

3. Measure the voltage between the (C818) 5-Volt Supply circuit at the harness connector and ground.

   Is the voltage below 1.0 Volt?

   Yes

   - Go To 5.

   No

   - Repair the (C818) 5-Volt Supply circuit for a short to voltage.
   - Perform the POWERTRAIN VERIFICATION TEST - 6.7L. Refer to **POWERTRAIN VERIFICATION TEST - 6.7L** .

5. **CHECK THE (C18) SIGNAL CIRCUIT FOR A SHORT TO VOLTAGE**
   1. Measure the voltage between the (C18) A/C Pressure Sensor Signal circuit at the harness connector and ground.

      Is the voltage below 1.0 Volt?

      Yes

      - Go To 6.

      No

      - Repair the (C18) A/C Pressure Sensor Signal circuit for a short to voltage.
      - Perform the POWERTRAIN VERIFICATION TEST - 6.7L. Refer to **POWERTRAIN VERIFICATION TEST - 6.7L** .

6. **CHECK THE (C918) RETURN CIRCUIT FOR AN OPEN BETWEEN THE TIPM HARNESS CONNECTOR AND THE A/C HARNESS CONNECTOR**
   1. Measure the resistance of the (C918) A/C Pressure Sensor Return circuit between the A/C Pressure Sensor harness connector and the C1 TIPM harness connector.

      Is the resistance below 5.0 Ohms?

      Yes

      - Go To 7.

No

- Repair the (C918) A/C Pressure Sensor Return circuit for an open or high resistance.
- Perform the POWERTRAIN VERIFICATION TEST - 6.7L. Refer to **POWERTRAIN VERIFICATION TEST - 6.7L** .

7. **TOTALLY INTEGRATED POWER MODULE**

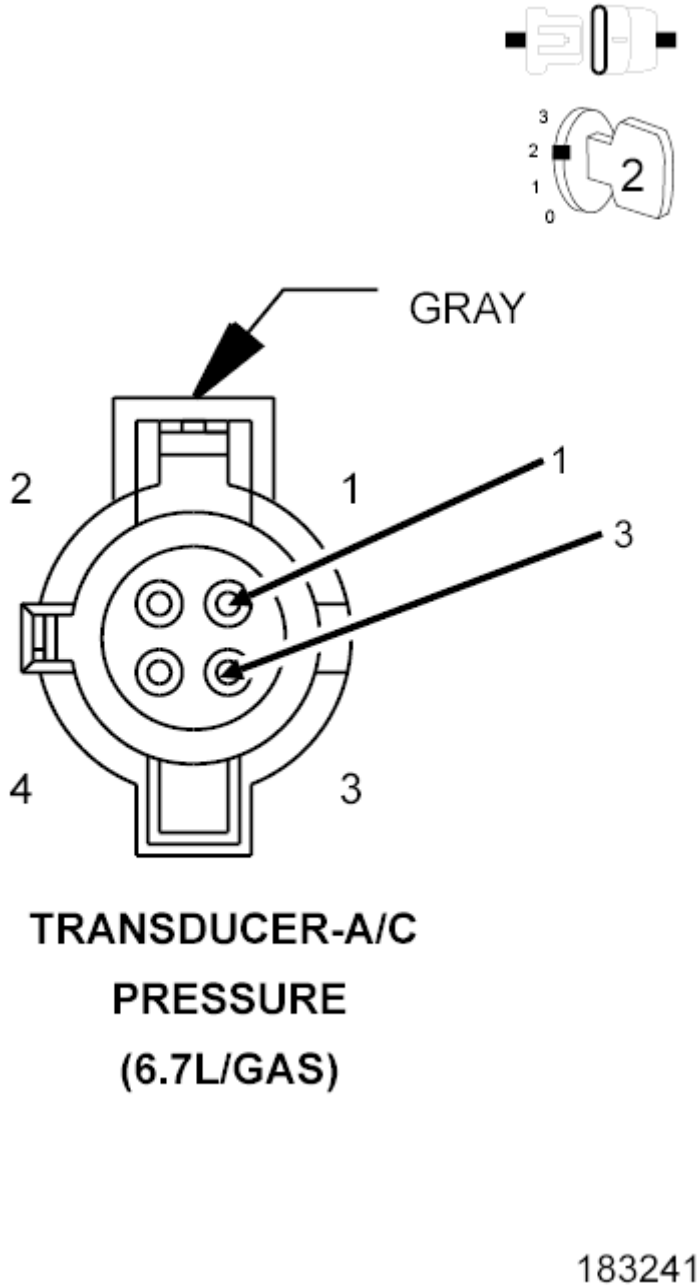

Fig. 51: Checking The Totally Integrated Power Module (TIPM)
Courtesy of CHRYSLER GROUP, LLC

1. Reconnect the C1 TIPM harness connectors.
2. Turn the ignition on.
3. While monitoring scan tool, use a jumper wire to connect the (C918) A/C Pressure Sensor Return circuit with the (C18) A/C Pressure Sensor Signal circuit at the A/C Pressure Sensor harness connector.

   Did DTC P0532 set?

   Yes

   - Perform the INTERMITTENT CONDITION diagnostic procedure. Refer to **INTERMITTENT CONDITION - 6.7L** .

   No

   - Replace the Totally Integrated Power Module in accordance with the Service Information.
   - Perform the BODY VERIFICATION TEST. Refer to **STANDARD PROCEDURE** .

P0541-INTAKE AIR HEATER CONTROL CIRCUIT 1 LOW

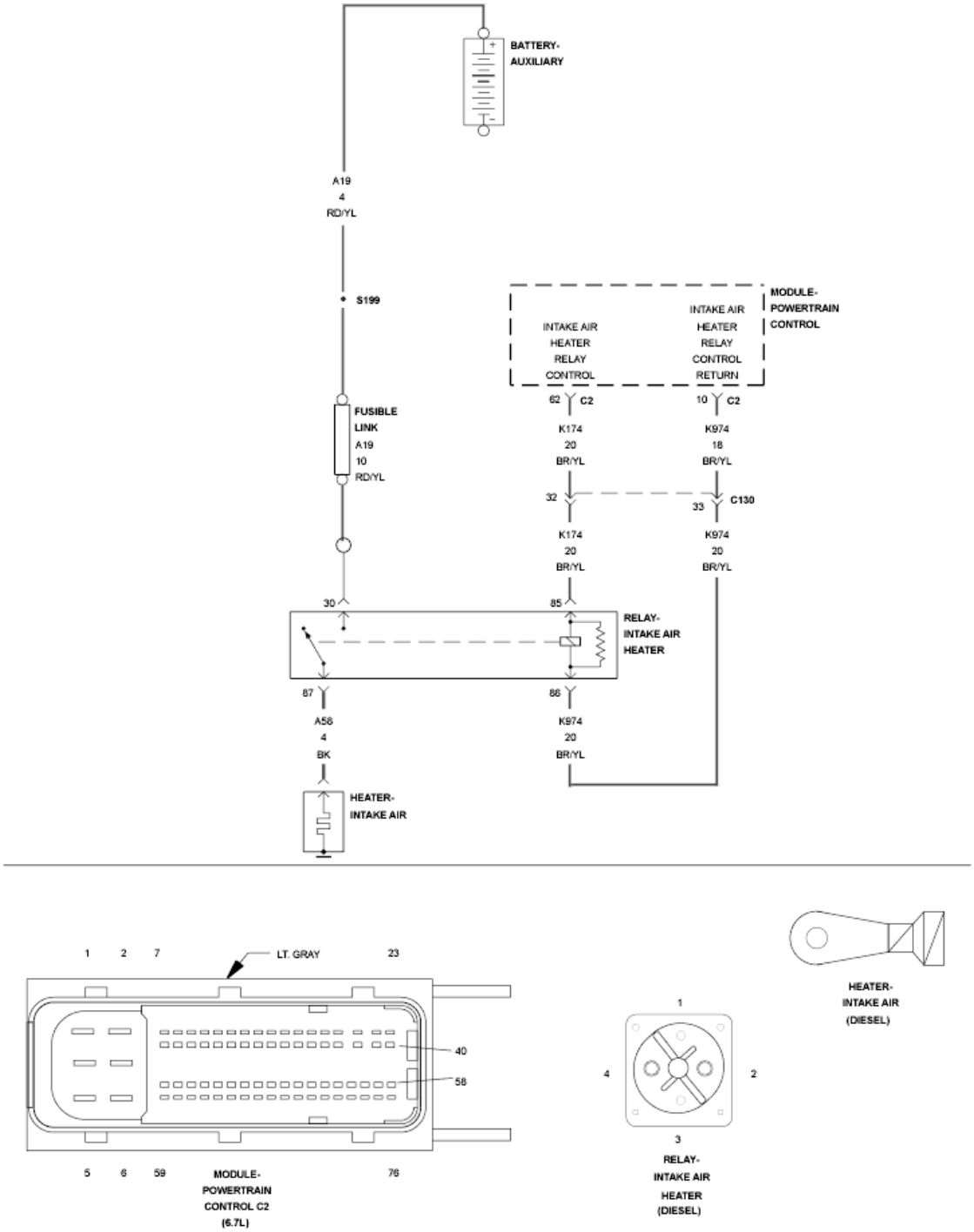

Fig. 52: Intake Air Heater & Relay Circuit Schematic
Courtesy of CHRYSLER GROUP, LLC

For a complete wiring diagram, **refer to appropriate SYSTEM WIRING DIAGRAMS article** .

THEORY OF OPERATION

The Intake Air Heater is integrated into the intake manifold cover. The Intake Air Heater element is used to heat

the air coming into the Intake Manifold. This is done to help engine starting and improve driveability with cool or cold outside temperatures. Electrical supply for the air heater element is controlled by the Powertrain Control Module (PCM) through the Intake Air Heater Relay. One heavy duty cable connects the air heater element to the Intake Air Heater Relay. This cable will supply 12 volts to the air heater elements. The PCM will light the MIL lamp as soon as this diagnostic runs and fails. The PCM will turn off the MIL lamp when the diagnostic runs and passes in four consecutive drive cycles.

WHEN MONITORED:

When the ignition is on and the Intake Air Heater Relay is commanded OFF.

SET CONDITION:

The Powertrain Control Module (PCM) is reading low voltage on the Intake Air Heater Relay Control circuit when performing a diagnostic check of the circuit.

POSSIBLE CAUSES

Possible Causes
(K174) INTAKE AIR HEATER RELAY CONTROL CIRCUIT SHORTED TO GROUND
(K174) INTAKE AIR HEATER RELAY CONTROL CIRCUIT SHORTED TO THE (K974) INTAKE AIR HEATER RELAY CONTROL RETURN CIRCUIT
INTAKE AIR HEATER RELAY POWERTRAIN CONTROL MODULE (PCM)

Always perform the Pre-Diagnostic Troubleshooting procedure before proceeding. Refer to PRE-DIAGNOSTIC TROUBLESHOOTING PROCEDURE - 6.7L .

DIAGNOSTIC TEST

1. **ACTIVE DTC**
    1. Turn the ignition on.
    2. With the scan tool, record all Freeze frame data.
    3. With the scan tool, read DTCs.

    Is the DTC active?

    Yes

    - Go To 2.

    No

    - Perform the INTERMITTENT CONDITION diagnostic procedure. Refer to **INTERMITTENT CONDITION - 6.7L** .
2. **CHECK THE (K174) INTAKE AIR HEATER RELAY CONTROL CIRCUIT FOR A SHORT TO**

GROUND

1. Turn ignition off.
2. Disconnect the (K174) Intake Air Heater Relay Control circuit connector at the Intake Air Heater Relay.
3. Disconnect the (K974) Intake Air Heater Relay Control Return circuit connector at the Intake Air Heater Relay.
4. Disconnect the PCM C2 harness connector.
5. Measure resistance between ground and the (K174) Intake Air Heater Relay Control circuit at the Intake Air Heater Relay Control circuit connector at the Intake Air Heater Relay.

   Is the resistance above 10k Ohms?

   Yes

   - Go To 3.

   No

   - Repair the (K174) Intake Air Heater Relay Control circuit for a short to ground.
   - Perform the POWERTRAIN VERIFICATION TEST - 6.7L. Refer to **POWERTRAIN VERIFICATION TEST - 6.7L** .

3. **CHECK FOR THE (K174) INTAKE AIR HEATER RELAY CONTROL CIRCUIT SHORTED TO THE (K974) INTAKE AIR HEATER RELAY CONTROL RETURN CIRCUIT**

   1. Measure the resistance between the (K174) Intake Air Heater Relay Control circuit and the (K974) Intake Air Heater Relay Control Return circuit at the terminals for the Intake Air Heater Relay.

      Is the resistance above 10k Ohms?

      Yes

      - Go To 4.

      No

      - Repair the short between the (K174) Intake Air Heater Relay Control circuit and the (K974) Intake Air Heater Relay Control circuit.
      - Perform the POWERTRAIN VERIFICATION TEST - 6.7L. Refer to **POWERTRAIN VERIFICATION TEST - 6.7L** .

4. **INTAKE AIR HEATER RELAY CONTROL**

   CAUTION: Excessive actuation to the Intake Air Heater may overheat and damage the heater assembly. Allow the Intake Air heater to cool for five minutes between each actuation procedure to prevent any possible damage from overheating to occur to the Intake Air Heater.

1. Turn ignition off.
2. Replace the Intake Air Heater Relay in accordance with the service information.
3. Reconnect all previously disconnected connectors.
4. Turn ignition on.
5. With the scan tool, erase DTCs.
6. Using a scan tool, actuate the Cold Start Aid Driver 1 Output circuit.

   NOTE: Set the actuation to toggle.

7. With the scan tool, read DTCs.

   Did the DTC return?

   Yes

   - Replace the Powertrain Control Module in accordance with the service information.
   - Perform the POWERTRAIN VERIFICATION TEST - 6.7L. Refer to **POWERTRAIN VERIFICATION TEST - 6.7L** .

   No

   - Repair complete.
   - Perform the POWERTRAIN VERIFICATION TEST - 6.7L. Refer to **POWERTRAIN VERIFICATION TEST - 6.7L** .

P0542-INTAKE AIR HEATER CONTROL CIRCUIT 1 HIGH

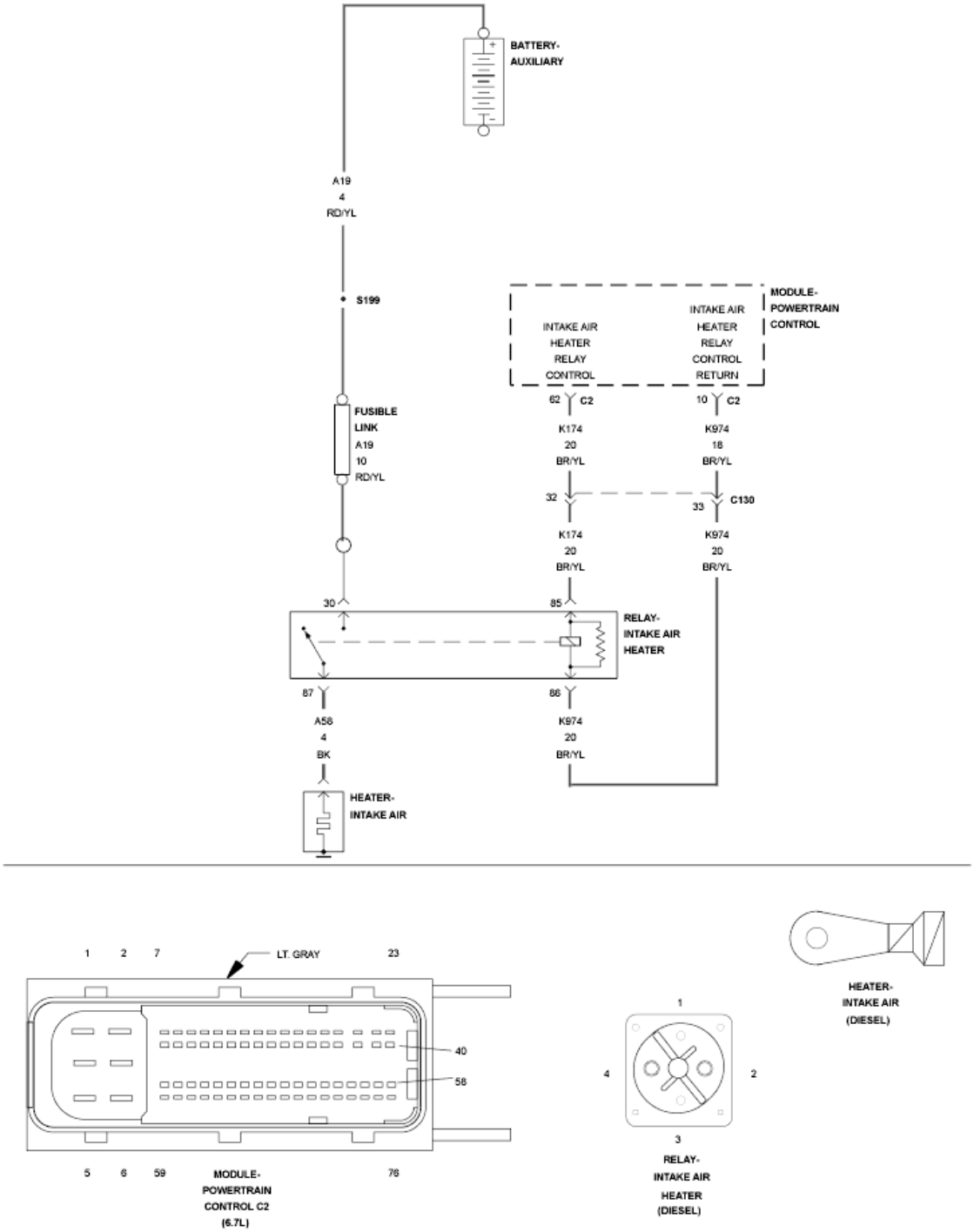

Fig. 53: Intake Air Heater & Relay Circuit Schematic
Courtesy of CHRYSLER GROUP, LLC

For a complete wiring diagram, **refer to appropriate SYSTEM WIRING DIAGRAMS article** .

THEORY OF OPERATION

The Intake Air Heater is integrated into the intake manifold cover. The Intake Air Heater element is used to heat

the air coming into the Intake Manifold. This is done to help engine starting and improve driveability with cool or cold outside temperatures. Electrical supply for the air heater element is controlled by the Powertrain Control Module (PCM) through the Intake Air Heater Relay. One heavy duty cable connects the air heater element to the Intake Air Heater Relay. This cable will supply 12 volts to the air heater elements. The PCM will light the MIL lamp as soon as this diagnostic runs and fails. The PCM will turn off the MIL lamp when the diagnostic runs and passes in four consecutive drive cycles.

WHEN MONITORED:

When the ignition is on and the Intake Air Heater Relay is commanded ON.

SET CONDITION:

With the Intake Air Heater Relay commanded on, the Powertrain Control Module (PCM) is not reading any voltage on the Intake Air Heater Relay Control Return circuit.

POSSIBLE CAUSES

Possible Causes
(K174) INTAKE AIR HEATER RELAY CONTROL CIRCUIT OPEN/HIGH RESISTANCE
(K974) INTAKE AIR HEATER RELAY CONTROL RETURN OPEN/HIGH RESISTANCE INTAKE AIR HEATER RELAY POWERTRAIN CONTROL MODULE (PCM)

Always perform the Pre-Diagnostic Troubleshooting procedure before proceeding. Refer to PRE-DIAGNOSTIC TROUBLESHOOTING PROCEDURE - 6.7L .

DIAGNOSTIC TEST

1. **ACTIVE DTC**
    1. Turn the ignition on.
    2. With the scan tool, record all Freeze frame data.
    3. With the scan tool, read DTCs.

    Did the DTC return?

    Yes

    - Go To 2.

    No

    - Perform the INTERMITTENT CONDITION diagnostic procedure. Refer to **INTERMITTENT CONDITION - 6.7L** .
2. **CHECK THE (K174) INTAKE AIR HEATER RELAY CONTROL CIRCUIT**

CAUTION: Excessive actuation to the Intake Air Heater may overheat and damage the heater assembly. Allow the Intake Air heater to cool for five minutes between each actuation procedure to prevent any possible damage from overheating to occur to the Intake Air Heater.

1. Turn ignition on, engine not running.
2. Disconnect the (K174) Intake Air Heater Relay Control circuit connector at the Intake Air Heater Relay.
3. Using a scan tool, actuate the Cold Start Aid Driver 1 Output circuit.

   NOTE: Set the actuation to on.

4. Using a voltmeter, probe the (K174) Intake Air Heater Relay Control circuit at the connector.

   Does the voltmeter read equivalent to battery voltage?

   Yes

   - Go To 4.

   No

   - Go To 3.

3. **CHECK THE (K174) INTAKE AIR HEATER RELAY CONTROL CIRCUIT FOR AN OPEN/HIGH RESISTANCE**
   1. Turn ignition off.
   2. Disconnect the PCM C2 harness connector.
   3. Measure the resistance of the (K174) Intake Air Heater Relay Control circuit between the Intake Air Heater Relay and the PCM C2 harness connector.

      Is the resistance below 5.0 Ohms?

      Yes

      - Replace the Powertrain Control Module in accordance with the service information.
      - Perform the POWERTRAIN VERIFICATION TEST - 6.7L. Refer to **POWERTRAIN VERIFICATION TEST - 6.7L** .

      No

      - Repair the (K174) Intake Air Heater Relay Control circuit for an open or high resistance.
      - Perform the POWERTRAIN VERIFICATION TEST - 6.7L. Refer to **POWERTRAIN VERIFICATION TEST - 6.7L** .

4. **CHECK THE (K974) INTAKE AIR HEATER RELAY CONTROL RETURN CIRCUIT**

1. Turn ignition off.
2. Disconnect the (K974) Intake Air Heater Relay Control Return circuit connector at the Intake Air Heater Relay.
3. Using a voltmeter connected to battery positive, probe the (K974) Intake Air Heater Relay Control Return circuit at the connector.

   Does the voltmeter read equivalent to battery voltage?

   Yes

   - Replace the Intake Air Heater Relay in accordance with the service information.
   - Perform the POWERTRAIN VERIFICATION TEST - 6.7L. Refer to **POWERTRAIN VERIFICATION TEST - 6.7L** .

   No

   - Go To 5.

5. **CHECK THE (K974) INTAKE AIR HEATER RELAY CONTROL RETURN FOR AN OPEN/HIGH RESISTANCE**
   1. Disconnect the PCM C2 harness connector.
   2. Measure the resistance of the (K974) Intake Air Heater Relay Control Return circuit between the Intake Air Heater Relay connector and the PCM C2 harness connector.

      Is the resistance below 5.0 Ohms?

      Yes

      - Repair the (K974) Intake Air Heater Relay Control Return circuit for an open or high resistance.
      - Perform the POWERTRAIN VERIFICATION TEST - 6.7L. Refer to **POWERTRAIN VERIFICATION TEST - 6.7L** .

      No

      - Replace the Powertrain Control Module in accordance with the service information.
      - Perform the POWERTRAIN VERIFICATION TEST - 6.7L. Refer to **POWERTRAIN VERIFICATION TEST - 6.7L** .

P0545-EXHAUST GAS TEMPERATURE SENSOR CIRCUIT LOW - BANK 1 SENSOR 1

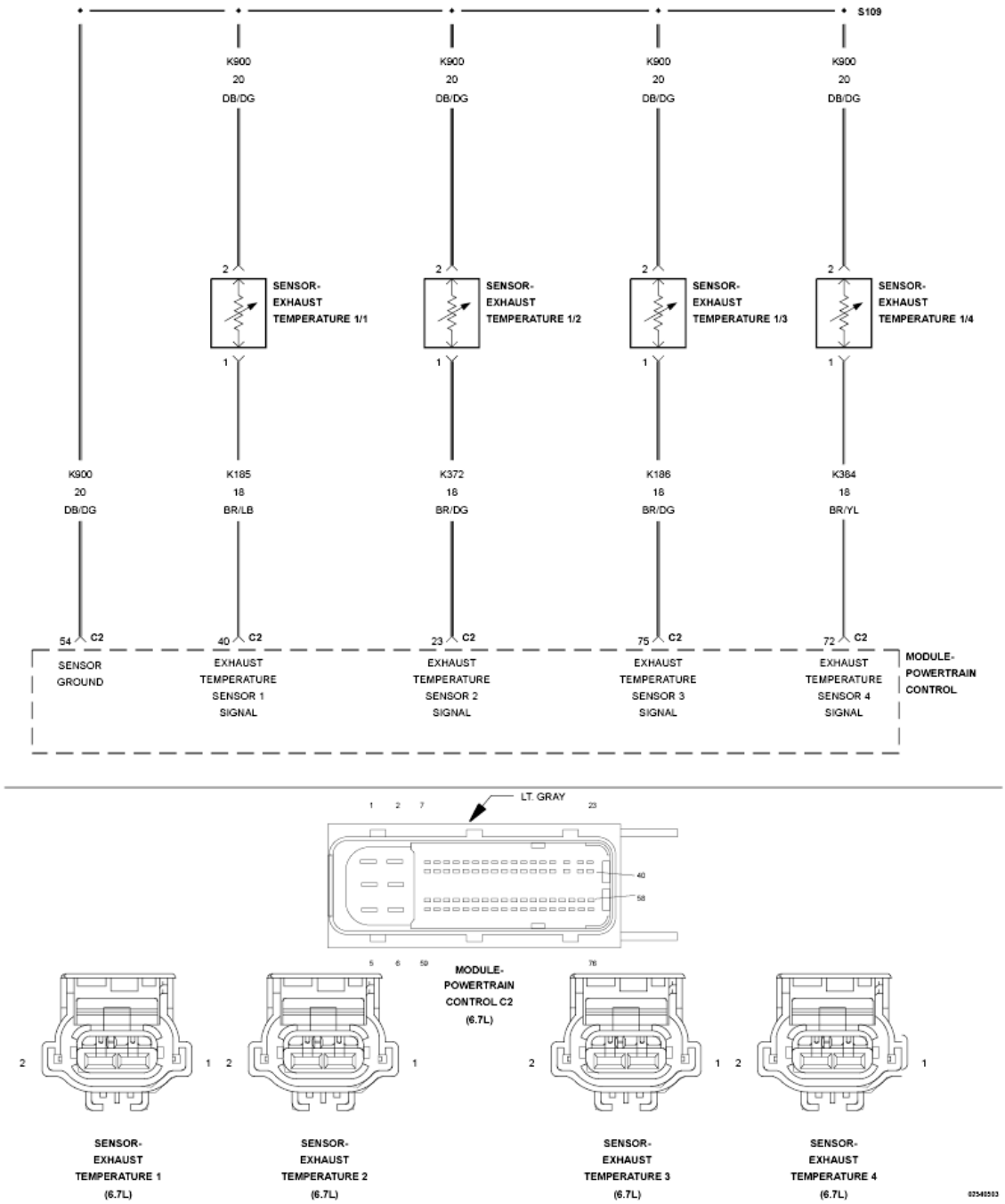

Fig. 54: Exhaust Gas Temperature Sensor Circuit Schematic
Courtesy of CHRYSLER GROUP, LLC

For a complete wiring diagram, **refer to appropriate SYSTEM WIRING DIAGRAMS article** .

THEORY OF OPERATION

The aftertreatment temperature sensors are used by the Powertrain Control Module (PCM) to monitor the engine exhaust temperatures in the aftertreatment system. The aftertreatment temperature sensors are thermistors and change resistance based on the temperature being measured. The PCM provides a 5-Volt

reference voltage to the sensor. The PCM monitors the change in signal voltage and converts this to a temperature value. When the exhaust gas temperature is cold, the sensor or thermistor resistance is high. The PCM signal voltage only pulls down a small amount through the sensor to ground. Therefore, the PCM senses a high signal voltage or low temperature. When the exhaust gas temperature is hot, the sensor resistance is low. The signal voltage pulls down a large amount. Therefore, the PCM senses a low signal voltage, or a high temperature. The PCM will set the fault code if it detects that the aftertreatment Diesel Particulate Filter inlet Exhaust Gas Temperature Sensor Signal voltage is less than a calibrated voltage for longer than a calibrated period. The PCM illuminates the MIL lamp immediately when the diagnostic runs and fails. A default value for the aftertreatment diesel particulate filter inlet temperature reading will be used and active regeneration of the diesel particulate filter will be disabled. The PCM will turn off the MIL lamp immediately after the diagnostic runs and passes.

WHEN MONITORED:

Ignition on.

SET CONDITION:

The Exhaust Gas Temperature Sensor 1/1 Signal voltage is below 0.25 of a Volt for 15.0 seconds.

POSSIBLE CAUSES

Possible Causes
(K185) EXHAUST TEMPERATURE SENSOR 1/1 SIGNAL CIRCUIT SHORTED TO THE (K900) SENSOR GROUND CIRCUIT
(K185) EXHAUST TEMPERATURE SENSOR 1/1 SIGNAL CIRCUIT SHORTED TO GROUND
(K185) EXHAUST TEMPERATURE SENSOR 1/1
POWERTRAIN CONTROL MODULE (PCM)

Always perform the Pre-Diagnostic Troubleshooting procedure before proceeding. Refer to PRE-DIAGNOSTIC TROUBLESHOOTING PROCEDURE - 6.7L .

DIAGNOSTIC TEST

1. **ACTIVE DTC**
    1. Turn the ignition on.
    2. With the scan tool, record all Freeze frame data.
    3. With the scan tool, erase DTCs.
    4. Turn the ignition off for 75 seconds.
    5. Turn the ignition on.
    6. With the scan tool, read DTCs.

    Did the DTC reset?

    Yes

- Go To 2.

No

- Perform the INTERMITTENT CONDITION diagnostic procedure. Refer to **INTERMITTENT CONDITION - 6.7L** .

2. **CHECK THE (K185) EXHAUST TEMPERATURE SENSOR 1/1 SIGNAL CIRCUIT FOR A SHORT TO GROUND**

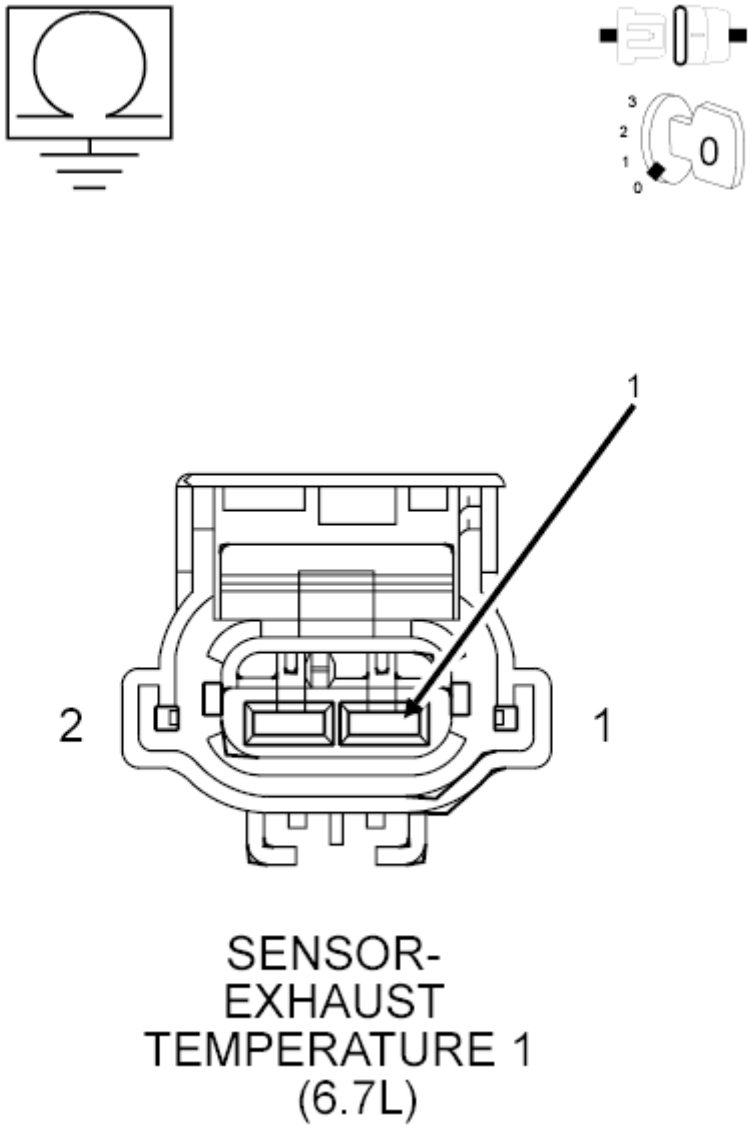

Fig. 55: Checking Exhaust Temperature Sensor Signal Circuit For Short To Ground
Courtesy of CHRYSLER GROUP, LLC

1. Turn the ignition off.
2. Disconnect the Exhaust Gas Temperature Sensor 1/1.

3. Disconnect the PCM C2 harness connector.
4. Measure the resistance between ground and the (K185) Exhaust Temperature Sensor 1/1 Signal circuit at the Exhaust Gas Temperature Sensor 1/1 harness connector.

   Is the resistance below 10k Ohms?

   Yes

   - Repair the (K185) Exhaust Gas Temperature Sensor 1/1 Signal circuit for a short to ground.
   - Perform the POWERTRAIN VERIFICATION TEST - 6.7L. Refer to **POWERTRAIN VERIFICATION TEST - 6.7L** .

   No

   - Go To 3.

3. **CHECK FOR THE (K185) EXHAUST TEMPERATURE SENSOR 1/1 SIGNAL CIRCUIT SHORTED TO THE (K900) SENSOR GROUND CIRCUIT**

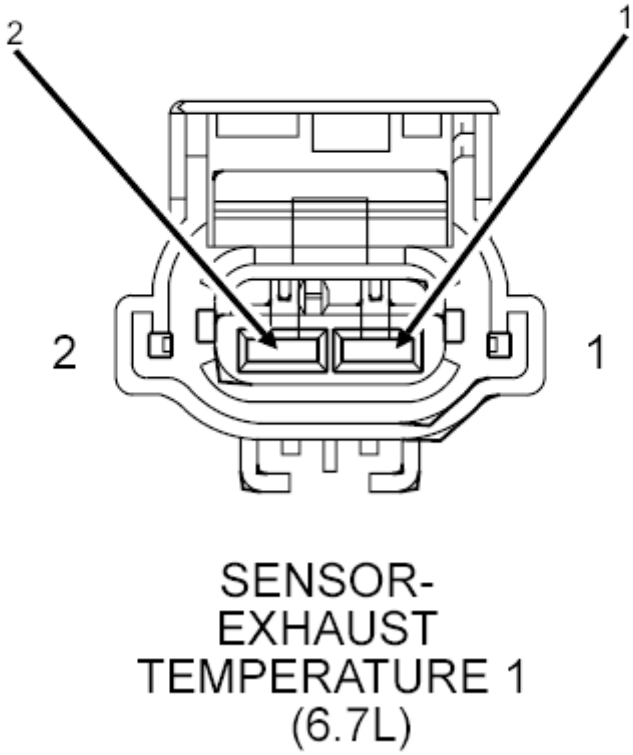

Fig. 56: Checking For Exhaust Temperature Sensor Signal Circuit Shorted To Sensor Ground Circuit
Courtesy of CHRYSLER GROUP, LLC

1. Turn the ignition off.

   NOTE: Check connectors - Clean/repair as necessary.

2. Measure the resistance between the (K185) Exhaust Temperature Sensor 1/1 Signal circuit and (K900) Sensor Ground circuit at the PCM C2 harness connector.

   Is the resistance below 10k Ohms?

   Yes

- Repair the short between the (K185) Exhaust Temperature Sensor 1/1 Signal circuit and (K900) Sensor Ground circuit.
- Perform the POWERTRAIN VERIFICATION TEST - 6.7L. Refer to **POWERTRAIN VERIFICATION TEST - 6.7L** .

No

- Go To 4.

4. **CHECK THE EXHAUST GAS TEMPERATURE SENSOR**
   1. Reconnect the Exhaust Gas Temperature Sensor 1/1 harness connector.
   2. Reconnect the PCM C2 harness connector.
   3. Turn the ignition on.
   4. With the scan tool, erase DTCs.
   5. Turn the ignition off for 75 seconds.
   6. Disconnect the Exhaust Gas Temperature Sensor 1/1 harness connector.
   7. Turn the ignition on.
   8. With the scan tool, read DTCs.

   Does DTC P0546 become active?

   Yes

   - Replace the Exhaust Temperature Sensor 1/1 in accordance with the service information.
   - Perform the POWERTRAIN VERIFICATION TEST - 6.7L. Refer to **POWERTRAIN VERIFICATION TEST - 6.7L** .

   No

   - Replace the Powertrain Control Module in accordance with the service information.
   - Perform the POWERTRAIN VERIFICATION TEST - 6.7L. Refer to **POWERTRAIN VERIFICATION TEST - 6.7L** .

P0546-EXHAUST GAS TEMPERATURE SENSOR CIRCUIT HIGH - BANK 1 SENSOR 1

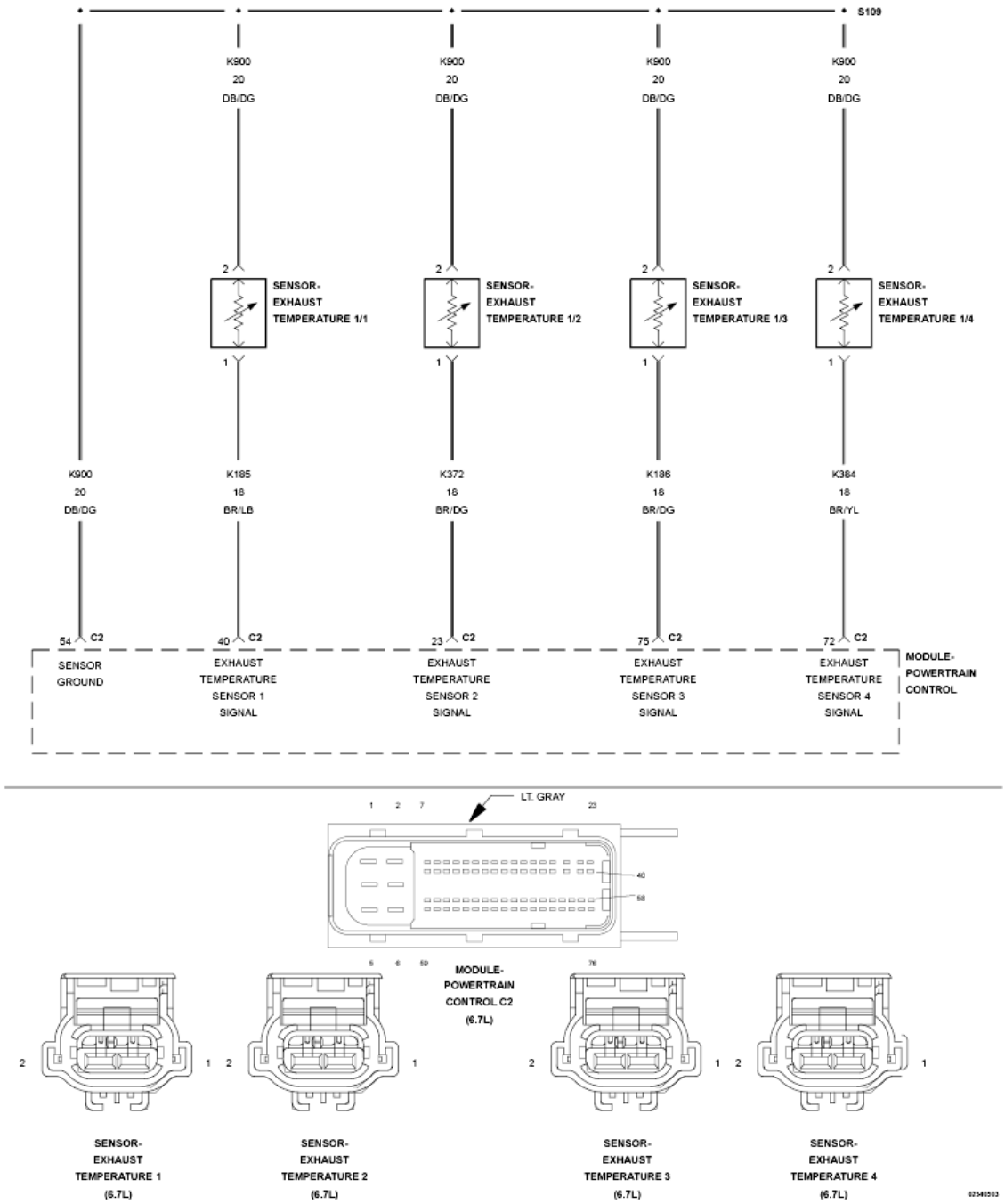

Fig. 57: Exhaust Gas Temperature Sensor Circuit Schematic
Courtesy of CHRYSLER GROUP, LLC

For a complete wiring diagram, **refer to appropriate SYSTEM WIRING DIAGRAMS article** .

THEORY OF OPERATION

The aftertreatment temperature sensors are used by the Powertrain Control Module (PCM) to monitor the engine exhaust temperatures in the aftertreatment system. The aftertreatment temperature sensors are thermistors and change resistance based on the temperature being measured. The PCM provides a 5-Volt

reference voltage to the sensor. The PCM monitors the change in signal voltage and converts this to a temperature value. When the exhaust gas temperature is cold, the sensor or thermistor resistance is high. The PCM signal voltage only pulls down a small amount through the sensor to ground. Therefore, the PCM senses a high signal voltage or low temperature. When the exhaust gas temperature is hot, the sensor resistance is low. The signal voltage pulls down a large amount. Therefore, the PCM senses a low signal voltage, or a high temperature. The PCM will set the fault if it detects that the diesel oxidation catalyst inlet exhaust gas temperature sensor signal voltage is greater than a calibrated voltage (VDC) for more than a calibrated time. The PCM illuminates the MIL lamp immediately when the diagnostic runs and fails. A default value for the aftertreatment diesel oxidation catalyst inlet temperature reading will be used and active regeneration of the diesel particulate filter will be disabled. The PCM will turn off the MIL lamp immediately after the diagnostic runs and passes.

WHEN MONITORED:

Ignition on.

SET CONDITION:

The Exhaust Gas Temperature Sensor 1/1 Signal voltage goes above 4.9 Volts for 15.0 seconds.

POSSIBLE CAUSES

Possible Causes
(K185) EXHAUST GAS TEMPERATURE SENSOR 1 SIGNAL CIRCUIT SHORTED TO VOLTAGE
(K185) EXHAUST GAS TEMPERATURE SENSOR 1 SIGNAL CIRCUIT OPEN/HIGH RESISTANCE
(K900) SENSOR GROUND CIRCUIT OPEN/HIGH RESISTANCE
EXHAUST GAS TEMPERATURE SENSOR 1
POWERTRAIN CONTROL MODULE (PCM)

Always perform the Pre-Diagnostic Troubleshooting procedure before proceeding. Refer to PRE-DIAGNOSTIC TROUBLESHOOTING PROCEDURE - 6.7L .

DIAGNOSTIC TEST

1. **ACTIVE DTC**
    1. Turn the ignition on.
    2. With the scan tool, record all Freeze frame data.
    3. With the scan tool, erase DTCs.
    4. Turn the ignition off for 75 seconds.
    5. Turn the ignition on.
    6. With the scan tool, read DTCs.

    Did the DTC reset?

Yes

- Go To 2.

No

- Perform the INTERMITTENT CONDITION diagnostic procedure. Refer to **INTERMITTENT CONDITION - 6.7L** .

2. **CHECK THE (K185) EXHAUST GAS TEMPERATURE 1/1 SENSOR SIGNAL CIRCUIT FOR A SHORT TO VOLTAGE**

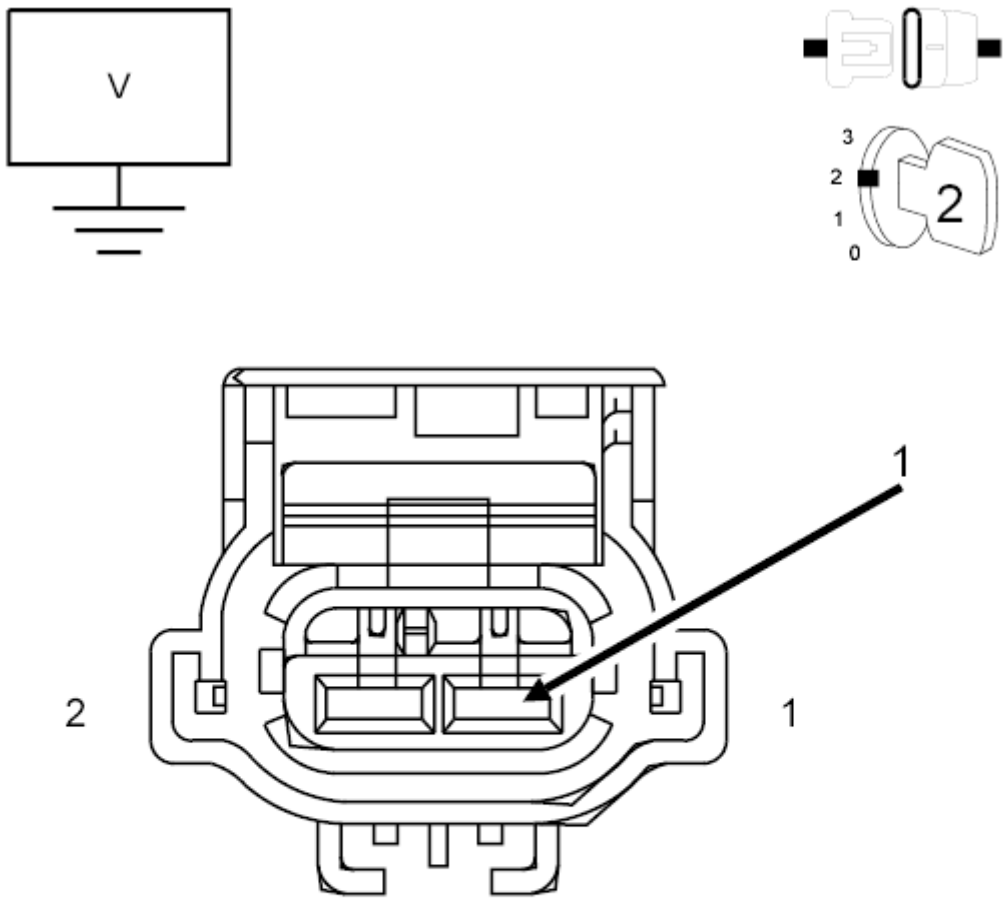

SENSOR-
EXHAUST
TEMPERATURE 1/1
(6.7L)

01404212

Fig. 58: Exhaust Gas Temperature Sensor 1 Connector Pin ID
Courtesy of CHRYSLER GROUP, LLC

1. Ignition on.
2. Disconnect the Exhaust Gas Temperature Sensor 1/1 harness connector.

NOTE: Check connectors - Clean/repair as necessary.

3. Measure the voltage on the (K185) Exhaust Gas Temperature Sensor 1/1 Signal circuit at the Exhaust Gas Temperature Sensor 1/1 harness connector.

   Is the voltage above 5.1 Volts?

   Yes

   - Repair the (K185) Exhaust Gas Temperature Sensor 1/1 Signal circuit for a short to voltage.
   - Perform the POWERTRAIN VERIFICATION TEST - 6.7L. Refer to **POWERTRAIN VERIFICATION TEST - 6.7L** .

   No

   - Go To 3.

3. **CHECK THE (K185) EXHAUST GAS TEMPERATURE SENSOR 1/1 SIGNAL CIRCUIT FOR AN OPEN/HIGH RESISTANCE**

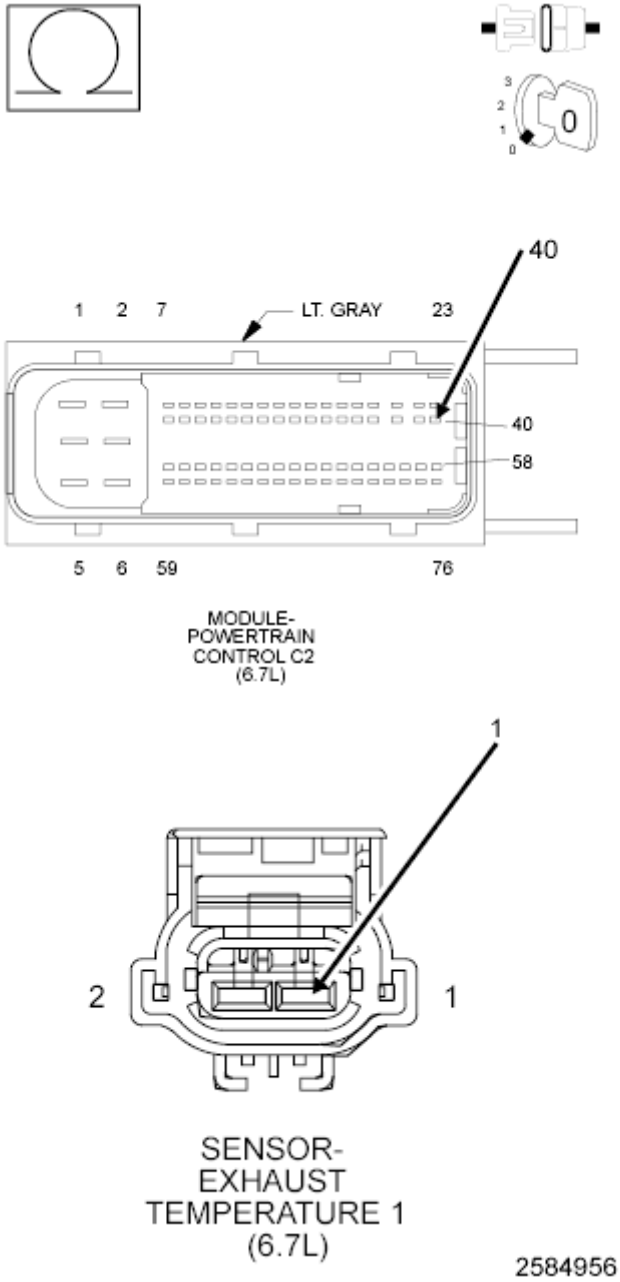

Fig. 59: Checking Exhaust Gas Temperature Sensor Signal Circuit For Open Or High Resistance
Courtesy of CHRYSLER GROUP, LLC

1. Turn the ignition off.
2. Disconnect the PCM C2 harness connector.
3. Measure the resistance of the (K185) Exhaust Gas Temperature Sensor 1/1 Signal circuit between the Exhaust Gas Temperature Sensor 1/1 harness connector and the PCM C2 harness connector.

   Is the resistance below 5.0 Ohms?

   Yes

- Go To 4.

No

- Repair the (K185) Exhaust Gas Temperature Sensor 1/1 Signal circuit for an open or high resistance.
- Perform the POWERTRAIN VERIFICATION TEST - 6.7L. Refer to **POWERTRAIN VERIFICATION TEST - 6.7L** .

4. **CHECK THE (K900) SENSOR GROUND CIRCUIT FOR AN OPEN/HIGH RESISTANCE**

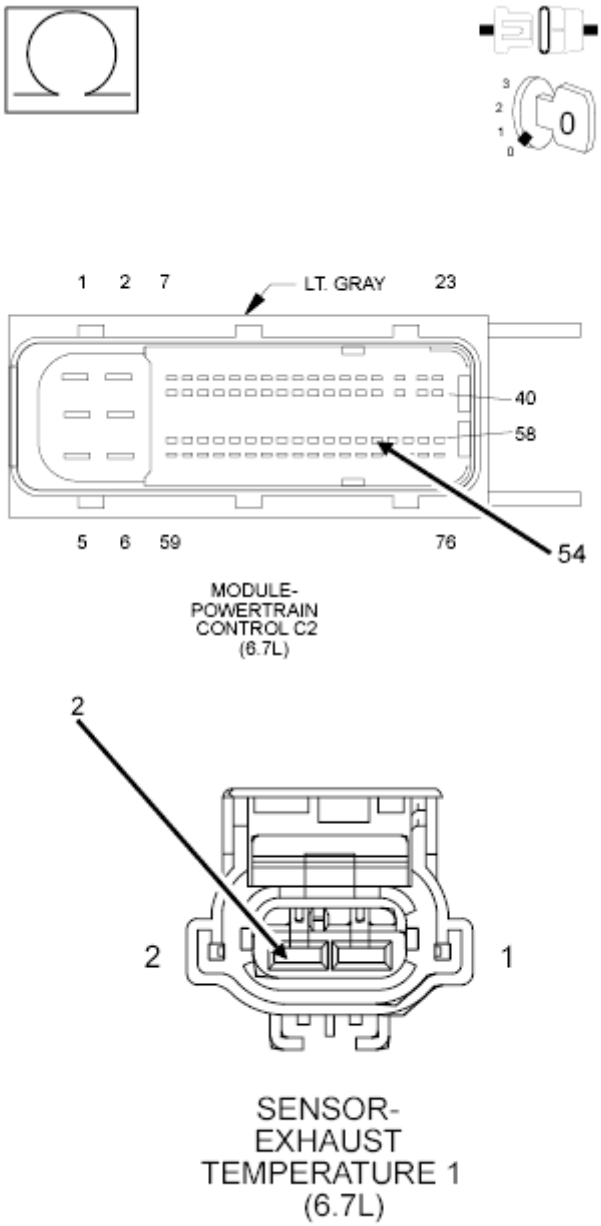

Fig. 60: Checking Exhaust Gas Temperature Sensor Ground Circuit For Open Or High Resistance
Courtesy of CHRYSLER GROUP, LLC

1. Measure the resistance of the (K900) Sensor ground circuit between the Exhaust Gas Temperature Sensor 1 harness connector and the PCM C2 harness connector.

   Is the resistance below 5.0 Ohms?

   Yes

   - Go To 5.

   No

   - Repair the (K900) Sensor ground circuit for an open or high resistance.
   - Perform the POWERTRAIN VERIFICATION TEST - 6.7L. Refer to **POWERTRAIN VERIFICATION TEST - 6.7L** .

5. **CHECK THE TEMPERATURE SENSOR**

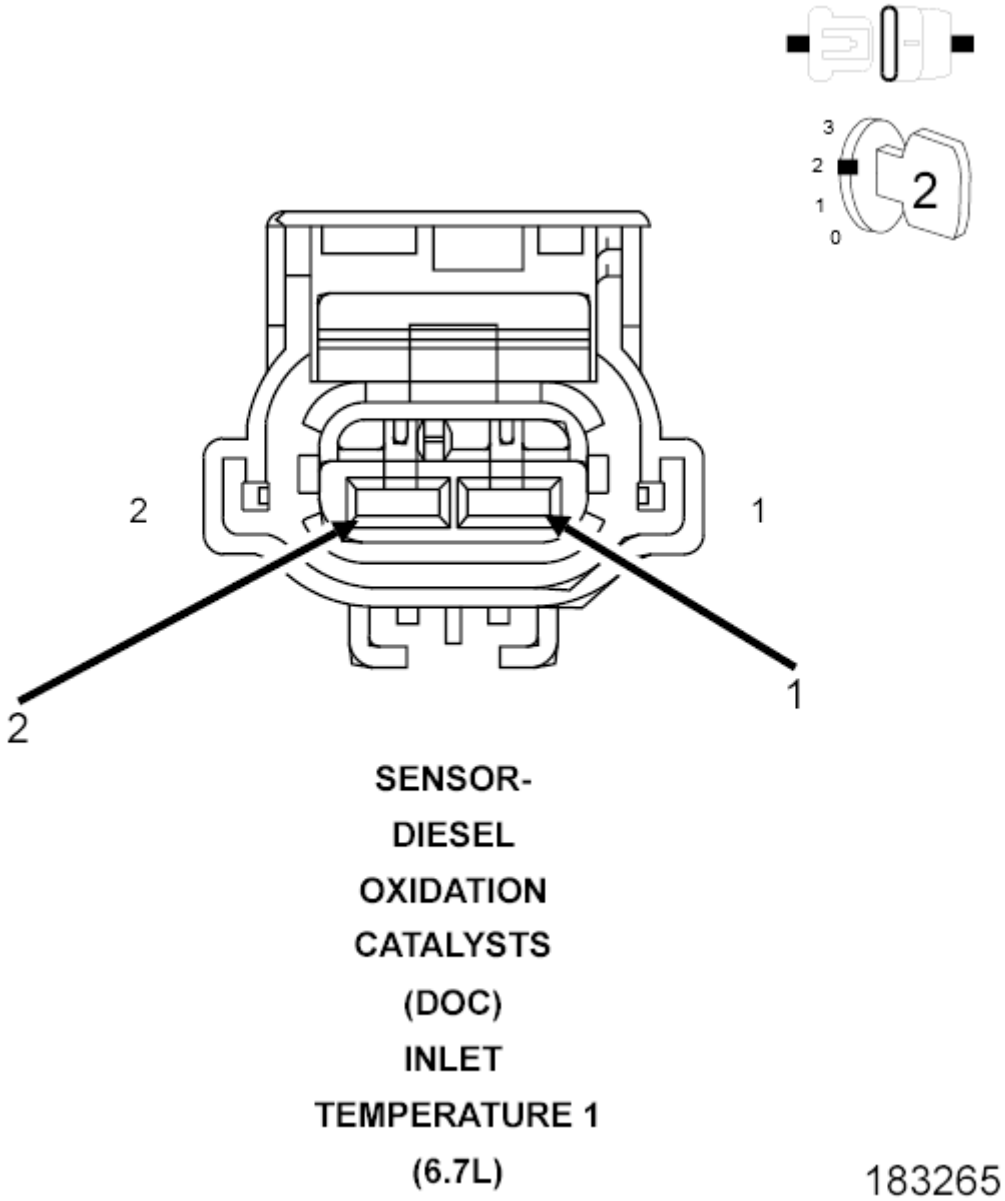

Fig. 61: Exhaust Temperature Sensor 1 Connector Pin ID
Courtesy of CHRYSLER GROUP, LLC

1. While monitoring the scan tool, connect a jumper between the Exhaust Temperature Sensor 1/1 Signal circuit and (K900) Sensor Ground circuit at the Exhaust Temperature Sensor 1/1 harness connector.

   Does DTC P0545 become active?

   Yes

   - Replace the Exhaust Gas Temperature Sensor 1/1 in accordance with the service information.
   - Perform the POWERTRAIN VERIFICATION TEST - 6.7L. Refer to **POWERTRAIN**

VERIFICATION TEST - 6.7L .

No

- Replace the Powertrain Control Module in accordance with the service information.
- Perform the POWERTRAIN VERIFICATION TEST - 6.7L. Refer to **POWERTRAIN VERIFICATION TEST - 6.7L** .

P0562-BATTERY VOLTAGE LOW

For a complete wiring diagram, **refer to appropriate SYSTEM WIRING DIAGRAMS article** .

WHEN MONITORED:

With the key on or the engine running.

SET CONDITION:

The battery voltage detected by the Powertrain Control Module (PCM) is less than a calibrated value.

POSSIBLE CAUSES

Possible Causes
BATTERY TERMINAL CONNECTIONS
ACCESSORY WIRING
BATTERY
HIGH RESISTANCE IN WIRE HARNESS
POWERTRAIN CONTROL MODULE (PCM)

Always perform the Pre-Diagnostic Troubleshooting procedure before proceeding. Refer to PRE-DIAGNOSTIC TROUBLESHOOTING PROCEDURE - 6.7L .

DIAGNOSTIC TEST

1. **CHECK THE BATTERY TERMINAL CONNECTIONS**

NOTE: If DTCs P0622 or P2503 are present, repair those DTCs before continuing with this test.

1. Visually inspect the positive and negative connections at the batteries and inspect the battery negative connections at the engine block.

   Are the connections free of corrosion and are they tight?

   Yes

- Go To 2.

No

- Repair the poor connections.
- Perform the POWERTRAIN VERIFICATION TEST - 6.7L. Refer to **POWERTRAIN VERIFICATION TEST - 6.7L** .

2. **ACCESSORY WIRING**
   1. Check for add-on or accessory wiring at positive (+) terminal of the battery.

      Are there any damaged wires at the battery?

      Yes

      - Repair accessory wiring.
      - Perform the POWERTRAIN VERIFICATION TEST - 6.7L. Refer to **POWERTRAIN VERIFICATION TEST - 6.7L** .

      No

      - Go To 3.
3. **CHECK THE BATTERY(S)**
   1. Perform battery load test using the Midtronics Micro 420 battery system tester.

      Did the batteries pass the test?

      Yes

      - Go To 4.

      No

      - Replace the weak battery or batteries.
      - Perform the POWERTRAIN VERIFICATION TEST - 6.7L. Refer to **POWERTRAIN VERIFICATION TEST - 6.7L** .
4. **CHECK FOR HIGH RESISTANCE IN WIRE HARNESS**
   1. Turn the ignition off.
   2. Disconnect the PCM harness connectors.
   3. Disconnect the battery terminals.
   4. Measure the resistance from the positive and negative battery posts to the appropriate circuits in the PCM harness connector.

      Is the resistance below 5.0 Ohms?

Yes

- Go To 5.

No

- Repair the high resistance in the wire harness.
- Perform the POWERTRAIN VERIFICATION TEST - 6.7L. Refer to **POWERTRAIN VERIFICATION TEST - 6.7L** .

5. **POWERTRAIN CONTROL MODULE**
   1. Reconnect the battery terminals.
   2. Measure and record the voltage between battery positive pins of the PCM connector and the battery negative circuits of the PCM harness connector.
   3. Reconnect the PCM harness connectors.
   4. Use the scan tool to measure and record battery voltage.

   Are the readings within 3.0 Volts of each other?

   Yes

   - Perform the INTERMITTENT CONDITION diagnostic procedure. Refer to **INTERMITTENT CONDITION - 6.7L** .

   No

   - Replace and program the Powertrain Control Module in accordance with the service information. Refer to **MODULE, POWERTRAIN CONTROL, 6.7L DIESEL, REMOVAL** and **PCM/ECM / TCM PROGRAMMING** .
   - Perform the POWERTRAIN VERIFICATION TEST - 6.7L. Refer to **POWERTRAIN VERIFICATION TEST - 6.7L** .

P0563-BATTERY VOLTAGE HIGH

For a complete wiring diagram, **refer to appropriate SYSTEM WIRING DIAGRAMS article** .

WHEN MONITORED:

With the key on or the engine running.

SET CONDITION:

The battery voltage detected by the Powertrain Control Module (PCM) is greater than a calibrated value.

POSSIBLE CAUSES

Possible Causes
BATTERIES IMPROPERLY INSTALLED POWERTRAIN CONTROL MODULE (PCM)

Always perform the Pre-Diagnostic Troubleshooting procedure before proceeding. Refer to PRE-DIAGNOSTIC TROUBLESHOOTING PROCEDURE - 6.7L .

DIAGNOSTIC TEST

1. **BATTERIES IMPROPERLY INSTALLED**

   NOTE: If DTCs P0622 of P2504 are present, repair those DTCs before continuing with this test.

   1. Disconnect the PCM C2 harness connector.
   2. Measure the battery voltage between the positive circuits and ground circuits of the PCM C2 harness connector.

      Is the voltage below 19.0 Volts?

      Yes

      - Go To 2.

      No

      - Install the battery system correctly.
      - Perform the POWERTRAIN VERIFICATION TEST - 6.7L. Refer to **POWERTRAIN VERIFICATION TEST - 6.7L** .
2. **POWERTRAIN CONTROL MODULE**
   1. Reconnect the battery terminals.
   2. Measure and record the voltage between battery positive pins of the PCM connector and the battery negative circuits of the PCM harness connector.
   3. Reconnect the PCM C2 harness connector.
   4. Use the scan tool to measure and record battery voltage.

      Are the readings within 3 volts of each other?

      Yes

      - Perform the INTERMITTENT CONDITION diagnostic procedure. Refer to **INTERMITTENT CONDITION - 6.7L** .

      No

- Replace and program the Powertrain Control Module in accordance with the service information. Refer to **MODULE, POWERTRAIN CONTROL, 6.7L DIESEL, REMOVAL** and **PCM/ECM / TCM PROGRAMMING** .
- Perform the POWERTRAIN VERIFICATION TEST - 6.7L. Refer to **POWERTRAIN VERIFICATION TEST - 6.7L** .

P056D-REDUCTANT CONTROL MODULE SYSTEM VOLTAGE

For a complete wiring diagram, **refer to appropriate SYSTEM WIRING DIAGRAMS article** .

WHEN MONITORED:

Continuously with the ignition on.

SET CONDITION:

The battery voltage detected by the DEF Dosing Control Unit is below or above a calibrated threshold.

POSSIBLE CAUSES

Possible Causes
WEAK OR DAMAGED BATTERY FAULTY ALTERNATOR DEF DOSING CONTROL UNIT 12-VOLT SUPPLY CIRCUIT(S) OPEN OR HIGH RESISTANCE
DEF DOSING CONTROL UNIT GROUND CIRCUIT(S) OPEN OR HIGH RESISTANCE

Always perform the Pre-Diagnostic Troubleshooting procedure before proceeding. Refer to PRE-DIAGNOSTIC TROUBLESHOOTING PROCEDURE - 6.7L .

DIAGNOSTIC TEST

1. **ACTIVE DTC**

NOTE: **If DTCs P0562 or P2503 are present, repair those DTCs before continuing with this test.**

NOTE: **If the vehicle was jump started, and there was a momentary voltage spike of 16 Volts, this DTC could be set.**

1. Turn the ignition on for one minute, engine not running.
2. With the scan tool check for active DTCs.

Is the DTC active?

Yes

- Go To 2.

No

- Perform the INTERMITTENT CONDITION diagnostic procedure. Refer to **INTERMITTENT CONDITION - 6.7L** .

2. **CHECK THE BATTERY TERMINALS AND LOAD TEST THE BATTERIES**
   1. Perform battery load test using the Midtronics Micro 420 battery system tester.
   2. Inspect the terminals of both batteries for signs of corrosion.

   Did both batteries pass the Midtronics test and have no signs of corrosion?

   Yes

   - Go To 3.

   No

   - Replace the defective battery or clean the battery posts and terminals and retest.
   - Perform the POWERTRAIN VERIFICATION TEST - 6.7L. Refer to **POWERTRAIN VERIFICATION TEST - 6.7L** .

3. **CHECK THE CHARGING SYSTEM OUTPUT**
   1. Reconnect the battery terminals.
   2. Perform a check of the charging system. Refer to **DIAGNOSIS AND TESTING** .

   Is the charging system performing properly?

   Yes

   - Go To 4.

   No

   - Diagnose and repair the charging system.
   - Perform the POWERTRAIN VERIFICATION TEST - 6.7L. Refer to **POWERTRAIN VERIFICATION TEST - 6.7L** .

4. **CHECK THE DEF DOSING CONTROL UNIT 12-VOLT SUPPLY CIRCUITS**
   1. Turn the engine off, ignition on.
   2. Disconnect the DEF Dosing Control Unit C2 harness connector.
   3. Using the wiring diagram as a guide, measure the voltage of the 12-Volt Supply circuits at the DEF Dosing Control Unit C2 harness connector.

   Do the DEF Dosing Control Unit 12-Volt Supply circuits read battery voltage +/- 0.2 of a Volt?

Yes

- Go To 5.

No

- Using the wiring diagram as a guide, repair the 12-Volt Supply circuits for an open or high resistance. If the fuse in the circuit is found to be open, check the circuits for a short to ground.
- Perform the POWERTRAIN VERIFICATION TEST - 6.7L. Refer to **POWERTRAIN VERIFICATION TEST - 6.7L** .

5. **CHECK THE DEF DOSING CONTROL UNIT GROUND CIRCUITS**
   1. Turn the engine off.
   2. Using the wiring diagram as a guide, measure the resistance between ground and the ground circuits at the DEF Dosing Control Unit C2 harness connector.

      Do the DEF Dosing Control Unit ground circuits measure below 5.0 Ohms?

      Yes

      - Check the DEF Dosing Control Unit C2 connector for signs of cracks, water intrusion, debris, or corrosion that could affect the connection.
      - Perform the POWERTRAIN VERIFICATION TEST - 6.7L. Refer to **POWERTRAIN VERIFICATION TEST - 6.7L** .

      No

      - Using the wiring diagram as a guide, repair the ground circuits for an open or high resistance.
      - Perform the POWERTRAIN VERIFICATION TEST - 6.7L. Refer to **POWERTRAIN VERIFICATION TEST - 6.7L** .

P0571-BRAKE SWITCH 1 PERFORMANCE

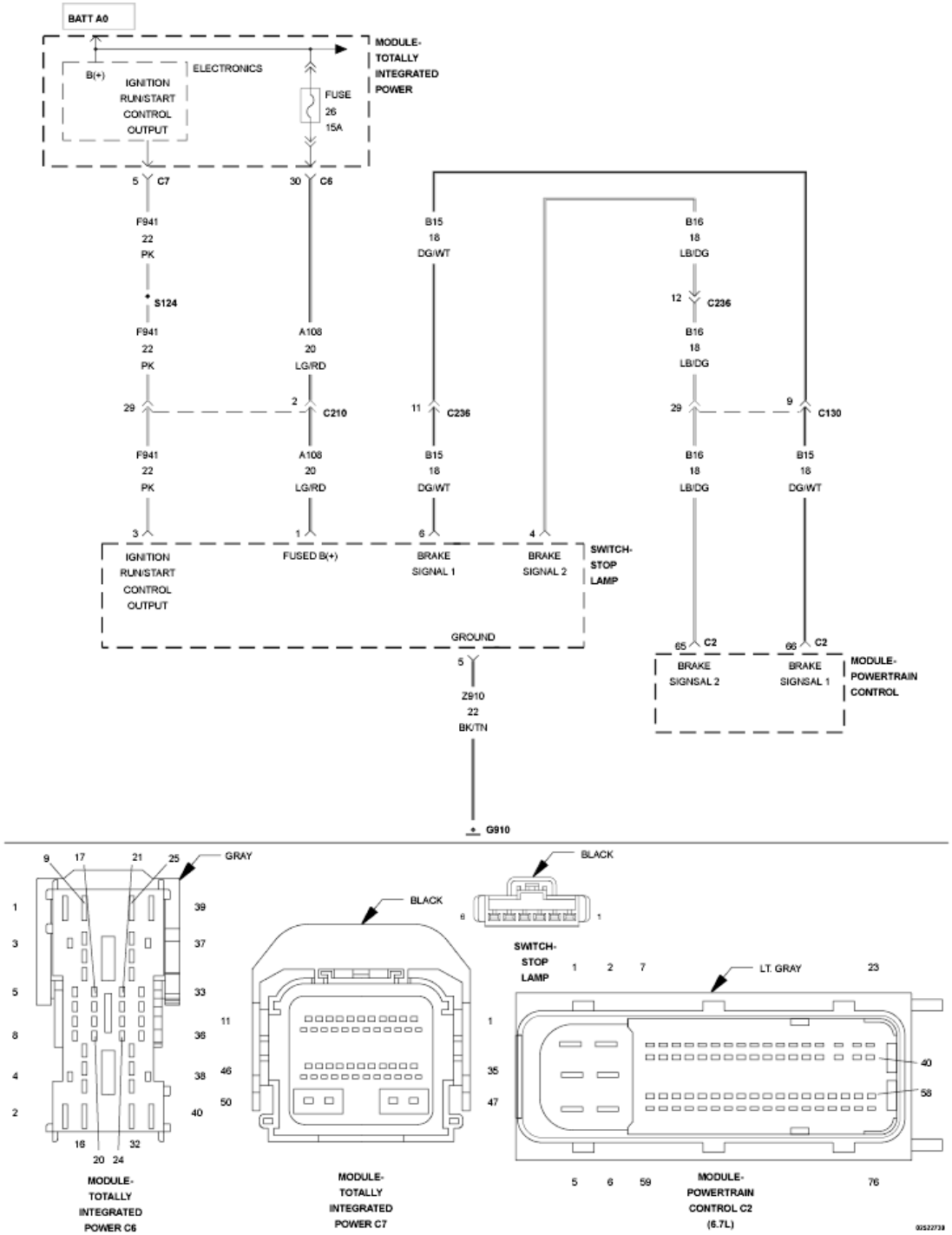

Fig. 62: Brake Switch Circuit Schematic
Courtesy of CHRYSLER GROUP, LLC

For a complete wiring diagram, **refer to appropriate SYSTEM WIRING DIAGRAMS article** .

THEORY OF OPERATION

This diagnostic is designed to detect a faulty brake switch. The algorithm starts to run when the operator is

driving above 30 mph (48 kmh) for more than five minutes. If after that time vehicle speed drops to below 2 mph (3 kmh) and the Powertrain Control Module (PCM) does not detect brake activity the diagnostic will fail. The PCM will turn on the ETC lamp immediately after the diagnostic runs and fails.

WHEN MONITORED:

Engine speed is above 30 mph (48 kmh) for more than five minutes

SET CONDITION:

Vehicle speed is detected at 2 mph (3 kmh) without brake activity.

POSSIBLE CAUSES

Possible Causes
VEHICLE SPEED SENSOR
BRAKE SWITCH
POWERTRAIN CONTROL MODULE (PCM)

Always perform the Pre-Diagnostic Troubleshooting procedure before proceeding. Refer to PRE-DIAGNOSTIC TROUBLESHOOTING PROCEDURE - 6.7L .

DIAGNOSTIC TEST

1. **OTHER DTCS**
    1. With the scan tool, read DTCs.

       Are other DTCs present?

       Yes

       - Troubleshoot other DTCs first.

       No

       - Go To 2.
2. **POWERTRAIN CONTROL MODULE**
    1. Interview customer. This fault can be set if the customer coasts to a vehicle speed below 2 mph (3 kmh) by using the parking brake or exhaust brake.

       Did the customer coast to a near stop without using the service brake?

       Yes

       - Explain diagnostic operation to customer. Repair complete.

No

- Replace the Powertrain Control Module in accordance with the service information.
- Perform the POWERTRAIN VERIFICATION TEST - 6.7L. Refer to **POWERTRAIN VERIFICATION TEST - 6.7L** .

P0572-BRAKE SWITCH 1 STUCK ON

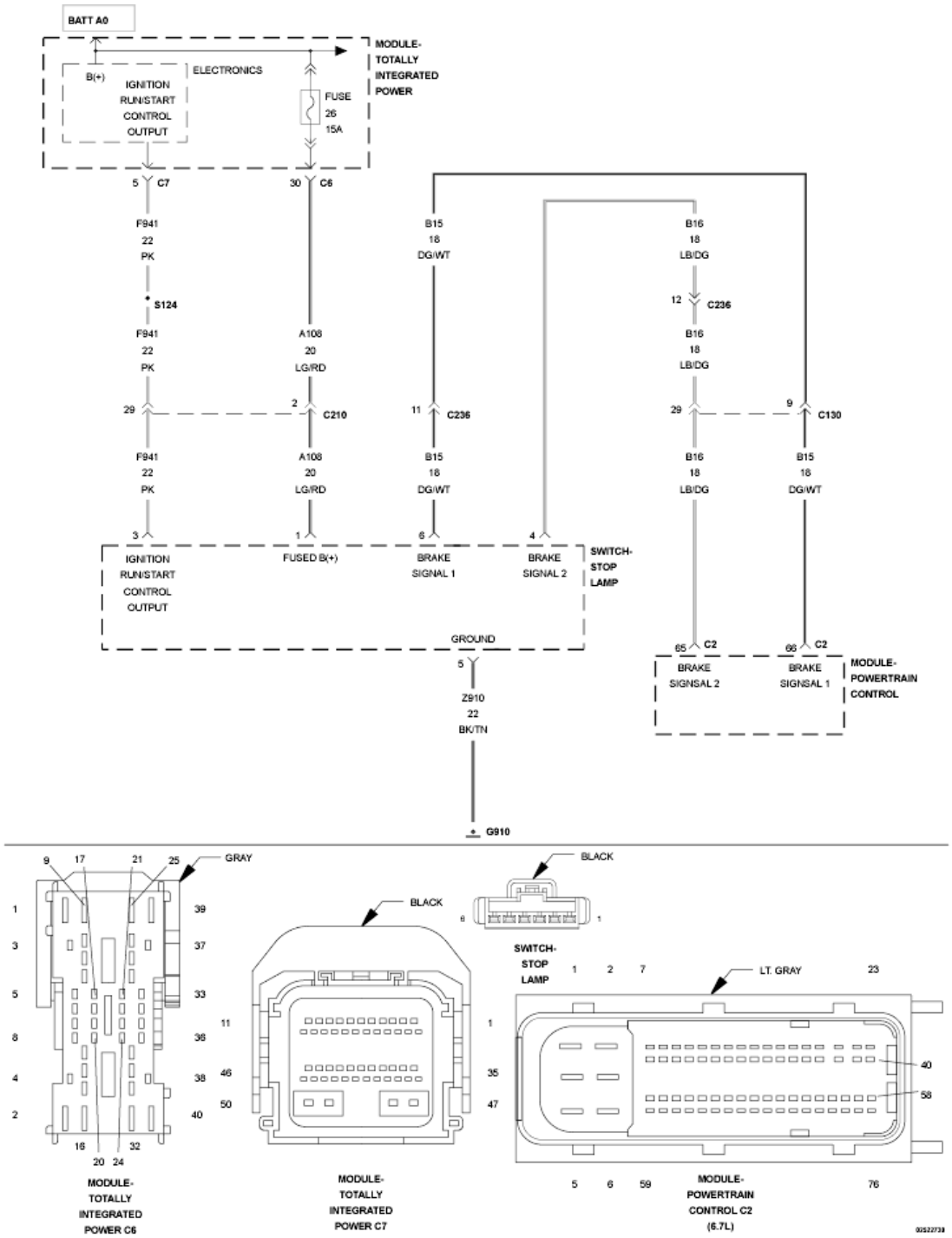

Fig. 63: Brake Switch Circuit Schematic
Courtesy of CHRYSLER GROUP, LLC

For a complete wiring diagram, **refer to appropriate SYSTEM WIRING DIAGRAMS article** .

WHEN MONITORED:

While the ignition is on.

SET CONDITION:

The brake switch status is equal to off and the not brake switch status is equal to on for a calibrated amount of time.

POSSIBLE CAUSES

Possible Causes
DAMAGED WIRING HARNESS OR CONNECTORS
BRAKE SWITCH CIRCUIT SHORTED TO GROUND (BRAKE SWITCH WILL ALWAYS BE OFF)
BRAKE SWITCH
POWERTRAIN CONTROL MODULE (PCM)

Always perform the Pre-Diagnostic Troubleshooting procedure before proceeding. Refer to PRE-DIAGNOSTIC TROUBLESHOOTING PROCEDURE - 6.7L .

DIAGNOSTIC TEST

1. **CHECK THE BRAKE SWITCH CIRCUIT FOR A SHORT TO GROUND**
    1. Turn the ignition off.
    2. Disconnect the Brake Switch harness connector. Inspect the terminals and connector for damage, corrosion, etc.
    3. Disconnect the PCM C2 harness connector. Inspect the terminals and connector for damage, corrosion, etc.

    NOTE: Check connectors - Clean/repair as necessary.

    4. Measure the resistance between the brake switch circuit in the PCM C2 harness connector and ground.

    Is the resistance below 10k Ohms?

    Yes

    - Repair the Brake Switch circuit shorted to ground.
    - Perform the POWERTRAIN VERIFICATION TEST - 6.7L. Refer to **POWERTRAIN**

VERIFICATION TEST - 6.7L .

No

- Go To 2.

2. **CHECK FOR THE BRAKE SWITCH CIRCUIT SHORTED TO OTHER CIRCUITS IN HARNESS**
   1. Measure the resistance between the Brake Switch wire in the PCM C2 harness connector and all other pins in the PCM connector.

      Is the resistance below 10k Ohms?

      Yes

      - Repair or replace the harness.
      - Perform the POWERTRAIN VERIFICATION TEST - 6.7L. Refer to **POWERTRAIN VERIFICATION TEST - 6.7L** .

      No

      - Go To 3.

3. **POWERTRAIN CONTROL MODULE**
   1. Reconnect the PCM C2 harness connector.
   2. Measure the resistance between the Brake Switch circuit at the switch connector and ground.

      Is the resistance below 10.0 Ohms?

      Yes

      - Replace the Powertrain Control Module in accordance with the service information.
      - Perform the POWERTRAIN VERIFICATION TEST - 6.7L. Refer to **POWERTRAIN VERIFICATION TEST - 6.7L** .

      No

      - Go To 4.

4. **CHECK THE BRAKE SWITCH**
   1. Reconnect the Brake Switch connector.
   2. Using the scan tool, clear the DTCs.
   3. Turn the ignition on.
   4. Cycle the brake pedal several times.
   5. Using the scan tool, read the DTCs.

      Has the Brake Switch Low DTC returned?

Yes

- Replace the Brake Switch in accordance with the service information.
- Perform the POWERTRAIN VERIFICATION TEST - 6.7L. Refer to **POWERTRAIN VERIFICATION TEST - 6.7L** .

No

- Perform the INTERMITTENT CONDITION diagnostic procedure. Refer to **INTERMITTENT CONDITION - 6.7L** .

P0573-BRAKE SWITCH 1 STUCK OFF

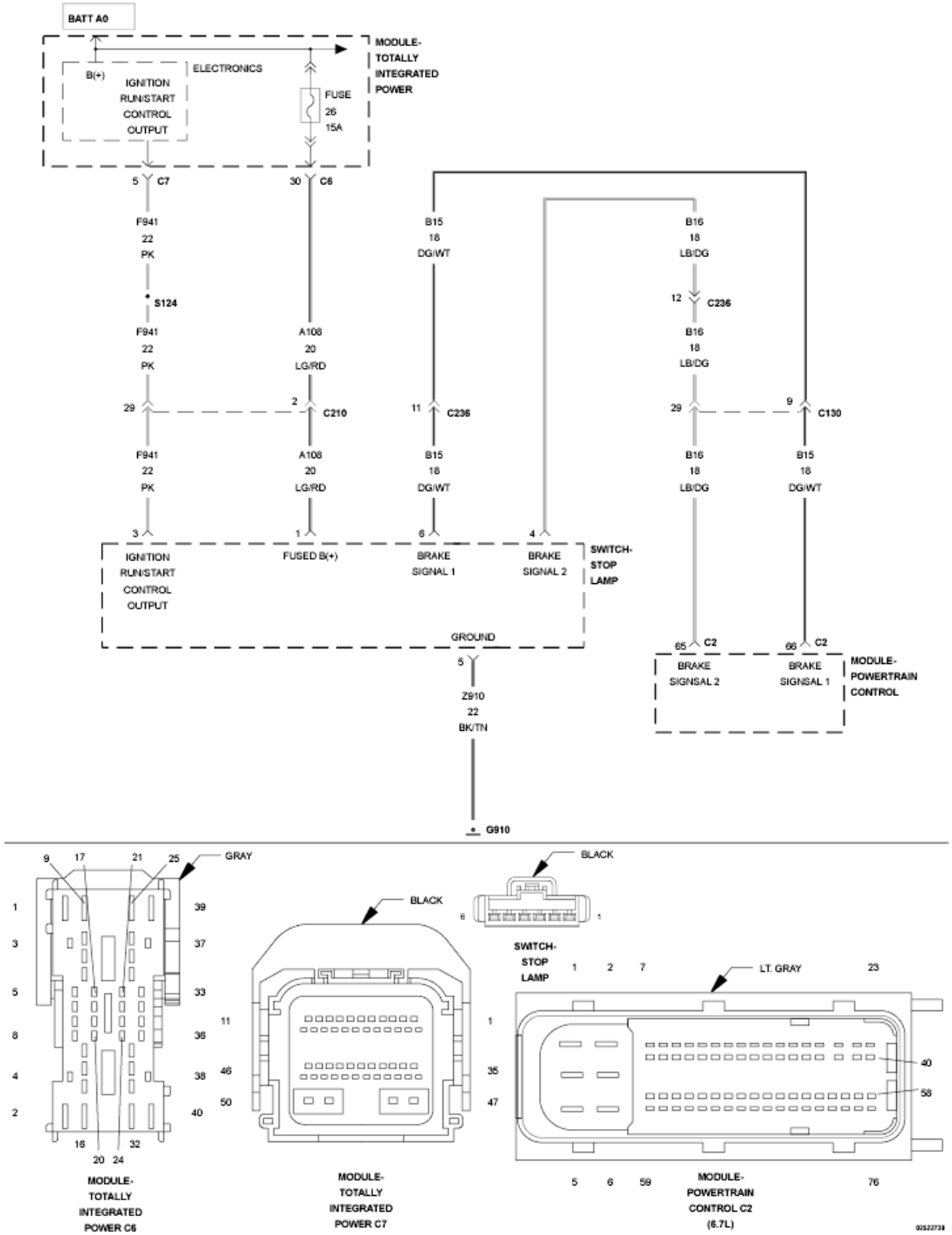

Fig. 64: Brake Switch Circuit Schematic
Courtesy of CHRYSLER GROUP, LLC

For a complete wiring diagram, **refer to appropriate SYSTEM WIRING DIAGRAMS article** .

WHEN MONITORED:

While the ignition is on.

SET CONDITION:

The brake switch status is equal to on and the no brake switch status is equal to off for a calibrated amount of time.

POSSIBLE CAUSES

Possible Causes
DAMAGED WIRING HARNESS OR CONNECTORS
BRAKE SWITCH CIRCUIT OPEN (BRAKE SWITCH WILL ALWAYS BE ON)
BRAKE SWITCH CIRCUIT SHORTED TO BATTERY VOLTAGE (BRAKE SWITCH WILL ALWAYS BE ON)
BRAKE SWITCH
POWERTRAIN CONTROL MODULE (PCM)

Always perform the Pre-Diagnostic Troubleshooting procedure before proceeding. Refer to PRE-DIAGNOSTIC TROUBLESHOOTING PROCEDURE - 6.7L .

DIAGNOSTIC TEST

1. **CHECK THE BRAKE SWITCH CIRCUIT FOR AN OPEN**
    1. Turn the ignition off.
    2. Disconnect the Brake Switch connection. Inspect the pins and connector for damage, corrosion, etc.
    3. Disconnect the PCM C2 harness connector. Inspect the pins and connector for damage, corrosion, etc.

    NOTE: Check connectors - Clean/repair as necessary.

    4. Measure the resistance of the Brake Switch signal circuits between the PCM C2 harness connector and the Brake Switch harness connector.

    Is the resistance below 10.0 Ohms?

    Yes

    - Go To 2.

    No

    - Repair the open Brake Switch circuits.
    - Perform the POWERTRAIN VERIFICATION TEST - 6.7L. Refer to **POWERTRAIN VERIFICATION TEST - 6.7L** .
2. **CHECK THE BRAKE SWITCH CIRCUIT FOR A SHORT TO VOLTAGE**
    1. Measure the voltage between the Brake Switch circuits in the PCM C2 harness connector and ground.

Is the voltage below 1.0 Volt?

Yes

- Go To 3.

No

- Repair the short to voltage in the circuit.
- Perform the POWERTRAIN VERIFICATION TEST - 6.7L. Refer to **POWERTRAIN VERIFICATION TEST - 6.7L** .

3. **POWERTRAIN CONTROL MODULE**
   1. Reconnect the PCM C2 harness connector.
   2. Install a jumper wire in the Brake Switch connector between signal circuit and ground.
   3. Turn the ignition on.
   4. Cycle the brake pedal several times.
   5. Using the scan tool, read the DTCs.

   Is the DTC for Brake Switch Low DTC present?

   Yes

   - Go To 4.

   No

   - Replace the Powertrain Control Module in accordance with the service information.
   - Perform the POWERTRAIN VERIFICATION TEST - 6.7L. Refer to **POWERTRAIN VERIFICATION TEST - 6.7L** .
4. **CHECK THE BRAKE SWITCH**
   1. Reconnect the Brake Switch connector.
   2. Using the scan tool, clear the DTCs.
   3. Turn the ignition on.
   4. Cycle the brake pedal several times.
   5. Using the scan tool, read the DTCs.

   Has the Brake Switch High DTC returned?

   Yes

   - Replace the Brake Switch in accordance with the service information.
   - Perform the POWERTRAIN VERIFICATION TEST - 6.7L. Refer to **POWERTRAIN VERIFICATION TEST - 6.7L** .

No

- Perform the INTERMITTENT CONDITION diagnostic procedure. Refer to **INTERMITTENT CONDITION - 6.7L** .

P0579-SPEED CONTROL SWITCH 1 PERFORMANCE

For a complete wiring diagram, **refer to appropriate SYSTEM WIRING DIAGRAMS article** .

WHEN MONITORED:

With the ignition key on.

SET CONDITION:

Speed Control (S/C) switch voltage output is not out of range but it does not equal any of the values for any of the button positions. One trip fault.

POSSIBLE CAUSES

Possible Causes
(V37) S/C SWITCH SENSE 1 CIRCUIT SHORTED TO VOLTAGE
(V37) S/C SWITCH SENSE 1 CIRCUIT OPEN
(V937) SWITCH RETURN CIRCUIT OPEN
(V37) S/C SWITCH SENSE 1 CIRCUIT SHORTED TO GROUND
(V37) S/C SWITCH SENSE 1 CIRCUIT SHORTED TO THE (V937) SWITCH RETURN CIRCUIT
CLOCKSPRING
STEERING WHEEL JUMPER HARNESS
SPEED CONTROL SWITCH
POWERTRAIN CONTROL MODULE (PCM)

Always perform the Pre-Diagnostic Troubleshooting procedure before proceeding. Refer to PRE-DIAGNOSTIC TROUBLESHOOTING PROCEDURE - 6.7L .

DIAGNOSTIC TEST

1. **ACTIVE DIAGNOSTIC TROUBLE CODE (DTC)**
    1. Start the engine and allow it to idle for at least 60 seconds.

WARNING: **When the engine is operating, do not stand in direct line with the fan. Do not put your hands near the pulleys, belts, or fan. Do not wear loose clothing. Failure to follow these instructions can result in possible serious or fatal injury.**

NOTE: It may be necessary to test drive the vehicle and operate the speed

control in order for this DTC to set.

2. Using the scan tool, select View DTCs.

   Is the DTC Active at this time?

   Yes

   - Go To 2.

   No

   - Perform the INTERMITTENT CONDITION diagnostic procedure. Refer to **INTERMITTENT CONDITION - 6.7L** .

2. **SPEED CONTROL SWITCH**
   1. Turn the ignition off.
   2. Disconnect the Speed Control Switch harness connector in accordance with the service information.
   3. Measure the resistance between (V37) S/C Switch Sense 1 circuit and the (V937) Switch Return circuit.
   4. Monitor the Ohmmeter while pressing each function button on each switch.
   5. The following resistance specs are taken between terminals (V37) S/C Switch Sense 1 circuit and the (V937) Switch Return circuit of the switch when holding the switch button in the following position:
      - Not pressing any switch - 20.5k Ohms
      - On/Off - 0.47k Ohms
      - Set/Decel - 4.34k Ohms
      - Cancel - 1.24k Ohms
      - Resume/Accel - 8.80k Ohms

      Does the function on the Speed Control Switch have the correct resistance value +/- 0.2 Ohm?

      Yes

      - Go To 3.

      No

      - Replace the Speed Control Switch in accordance with the service information.
      - Perform the POWERTRAIN VERIFICATION TEST. Refer to **POWERTRAIN VERIFICATION TEST - 6.7L** .

3. **(V37) S/C SWITCH SENSE 1 CIRCUIT SHORTED TO VOLTAGE**

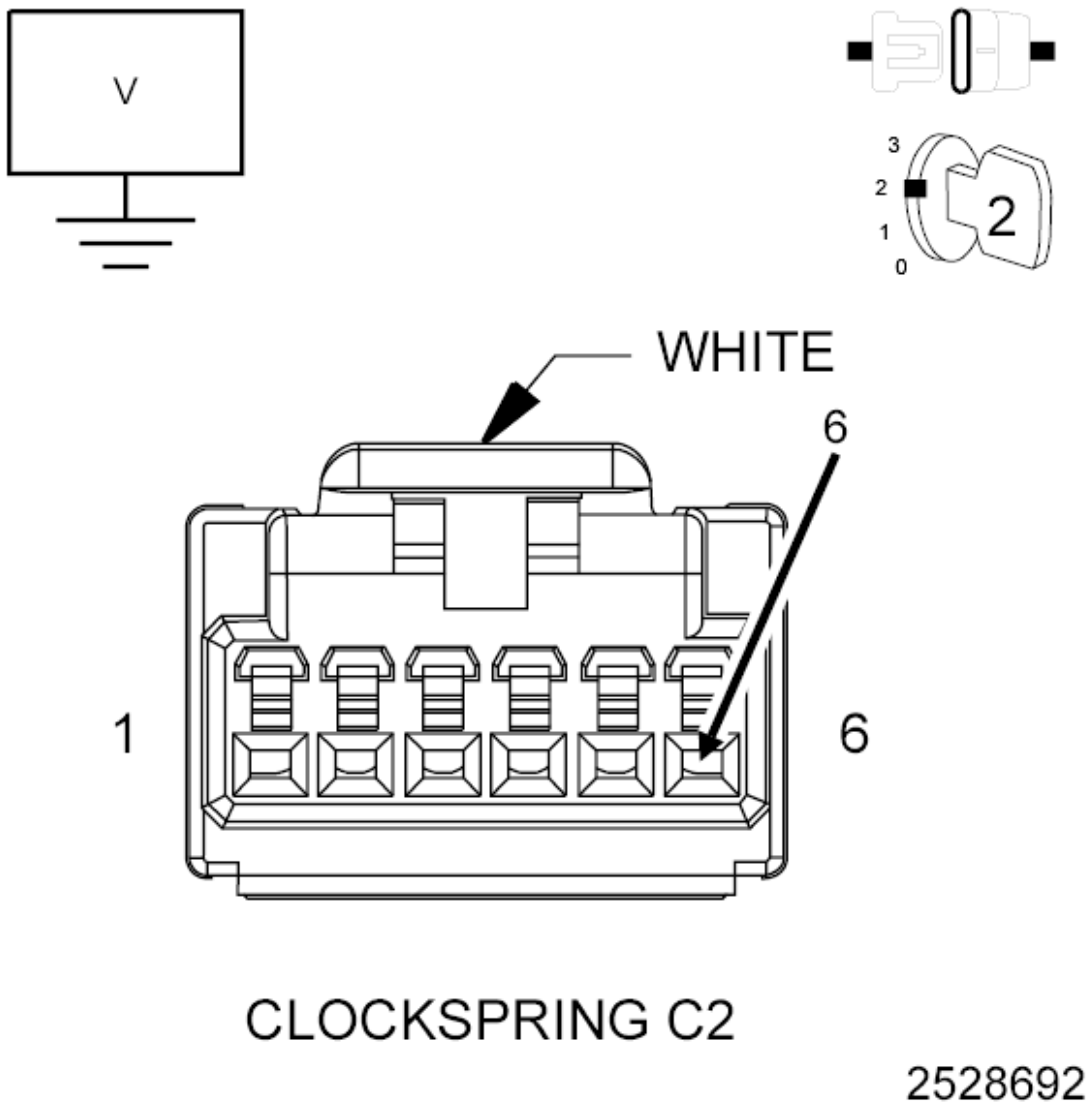

Fig. 65: Measuring Voltage On S/C Switch Sense Circuits In Clockspring Harness Connector
Courtesy of CHRYSLER GROUP, LLC

1. Disconnect the Clockspring C2 harness connector in accordance with the service information.
2. Ignition on, engine not running.
3. Measure the voltage on the (V37) S/C Switch Sense 1 circuit at the Clockspring C2 harness connector.

   Is the voltage reading above 5.2 volts?

   Yes

   - Repair the short to voltage in the (V37) S/C Switch Sense 1 circuit.
   - Perform the POWERTRAIN VERIFICATION TEST. Refer to **POWERTRAIN VERIFICATION TEST - 6.7L** .

No

- Go To 4.

4. **(V37) S/C NO. 1 SWITCH SIGNAL CIRCUIT SHORTED TO GROUND**

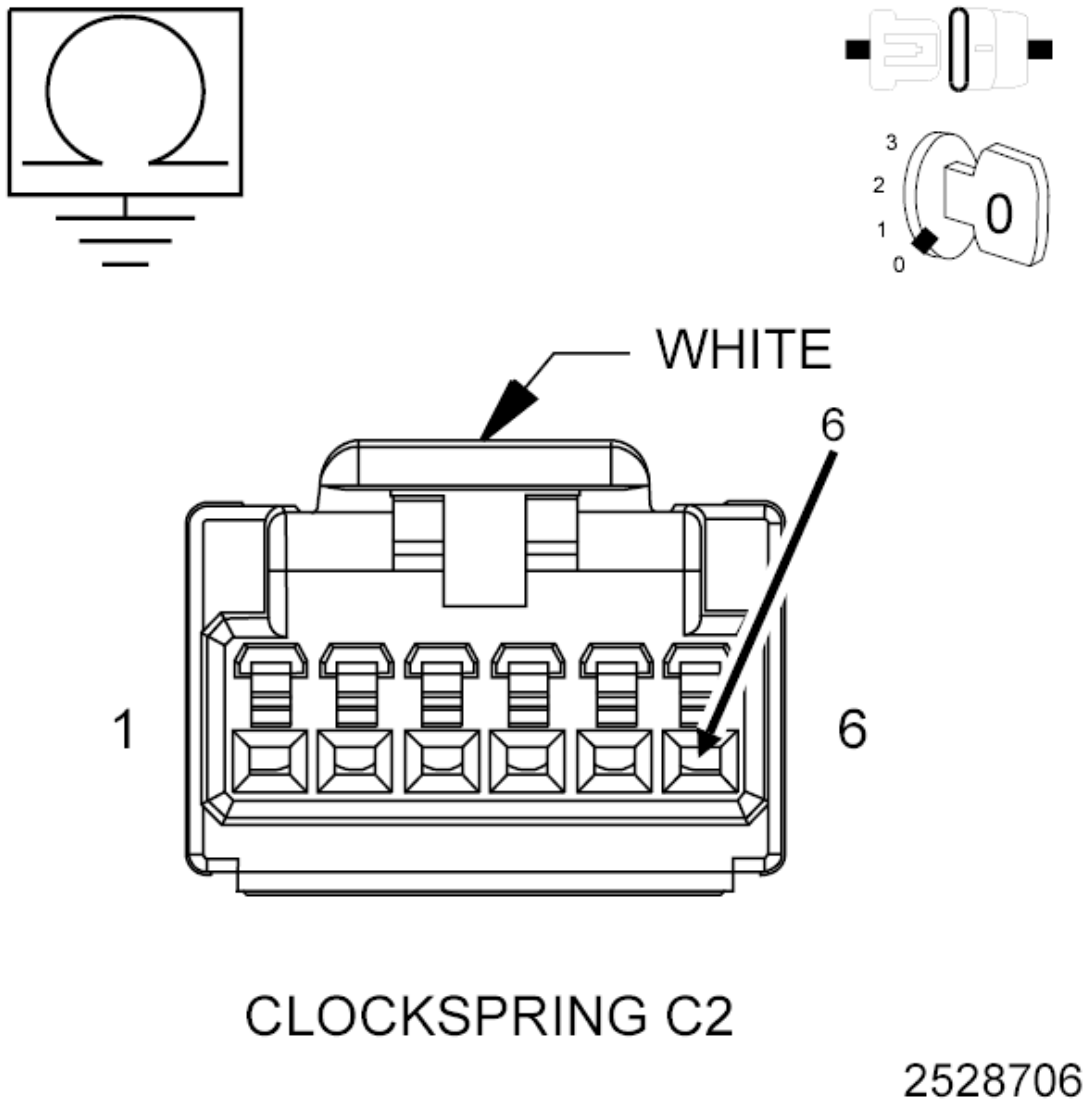

Fig. 66: Measuring Resistance Between Ground And S/C Switch Sense Circuit In SCM Harness Connector
Courtesy of CHRYSLER GROUP, LLC

1. Turn the ignition off.
2. Disconnect the PCM C2 harness connector.
3. Measure the resistance between ground and the (V37) S/C Switch Sense 1 circuit at the Clockspring C2 harness connector.

   Is the resistance above 10k Ohms?

Yes

- Go To 5.

No

- Repair the short to ground in the (V37) S/C Switch Sense 1 circuit.
- Perform the POWERTRAIN VERIFICATION TEST. Refer to **POWERTRAIN VERIFICATION TEST - 6.7L** .

5. **(V37) S/C SWITCH SENSE 1 CIRCUIT SHORTED TO THE (V937) S/C SWITCH RETURN CIRCUIT**

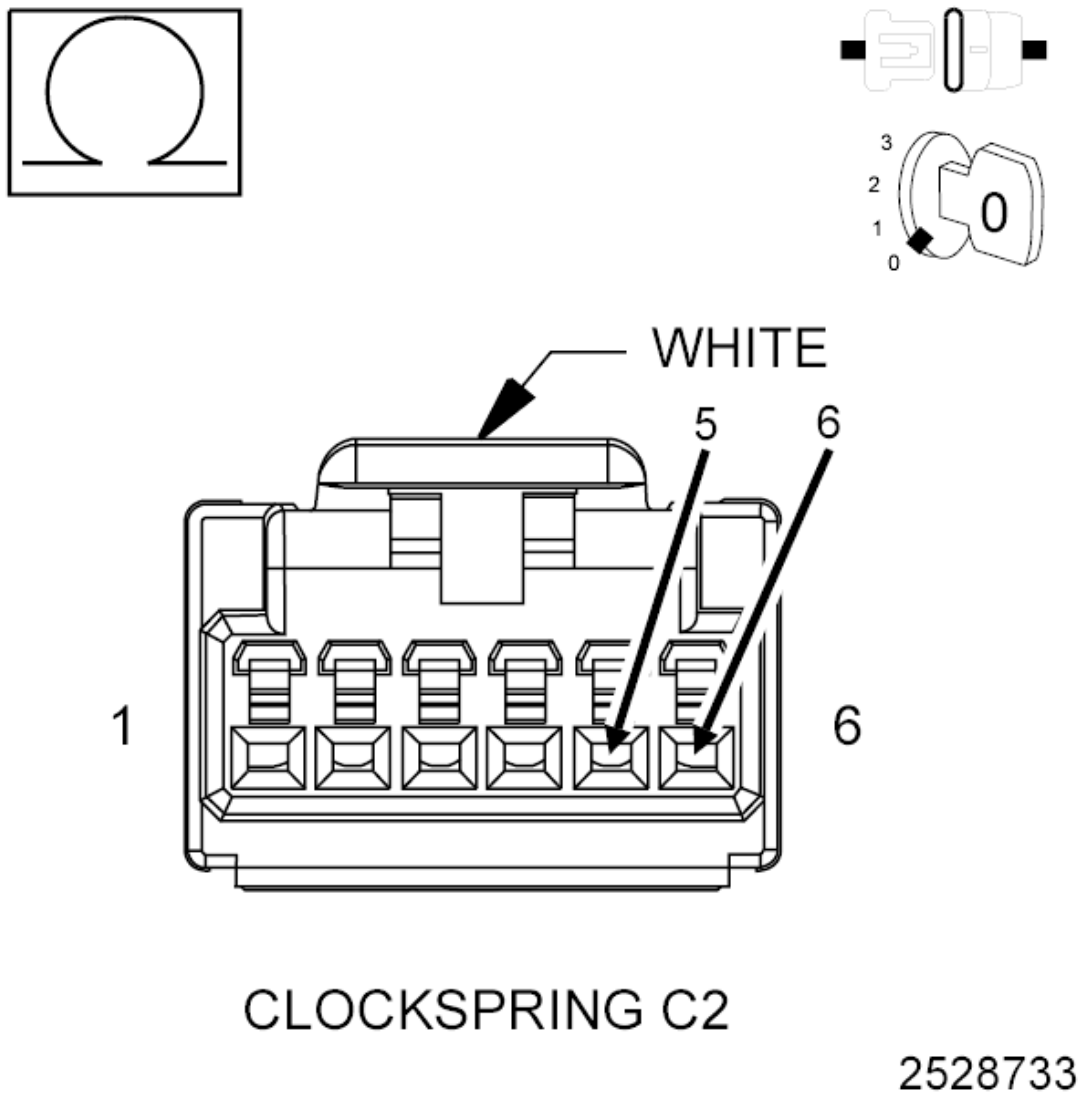

Fig. 67: Measuring Resistance Between S/C Switch Sense Circuit And S/C Switch Return Circuit In Clockspring C2 Harness Connector
Courtesy of CHRYSLER GROUP, LLC

1. Measure the resistance between the (V37) S/C Switch Sense 1 circuit and the (V937) S/C Switch Return circuit at the Clockspring C2 harness connector.

   Is the resistance above 10k Ohms?

   Yes

   - Go To 6.

   No

   - Repair the short between the (V37) S/C Switch Sense 1 circuit and the (V937) Switch Return circuit.
   - Perform the POWERTRAIN VERIFICATION TEST. Refer to **POWERTRAIN VERIFICATION TEST - 6.7L** .

6. **CLOCKSPRING**
   1. Disconnect the Clockspring C8 harness connector in accordance with the service information.
   2. Measure the resistance of the (V37) S/C Switch Sense 1 circuit between the Clockspring C2 and C8 at the Clockspring connectors.
   3. Measure the resistance of the (V937) Switch Return circuit between the Clockspring C2 and C8 at the Clockspring connectors.

      Is the resistance above 5.0 Ohms for either reading?

      Yes

      - Replace the Clockspring in accordance with the service information.
      - Perform the POWERTRAIN VERIFICATION TEST. Refer to **POWERTRAIN VERIFICATION TEST - 6.7L** .

      No

      - Go To 7.

7. **STEERING WHEEL JUMPER HARNESS**

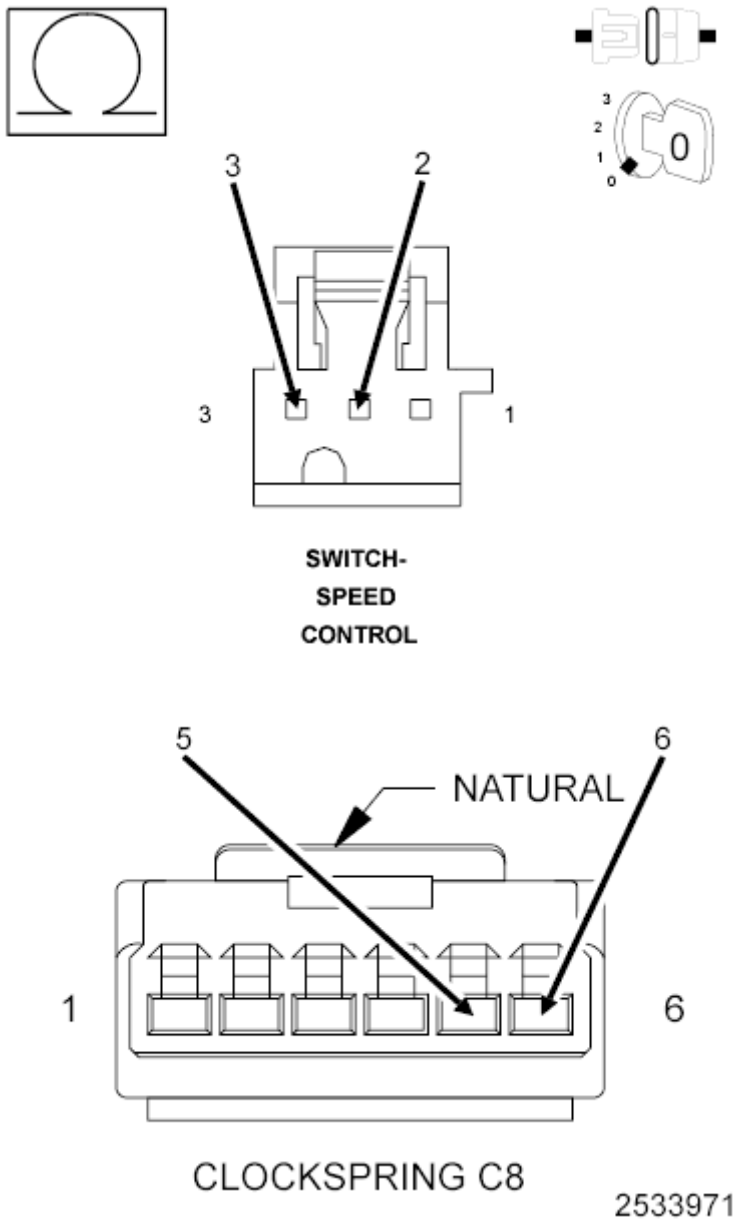

Fig. 68: Measuring Resistance Of S/C Switch Sense 1 Circuit Switch Return Circuit Between Clockspring Harness Connector And S/C Switch Harness Connector
Courtesy of CHRYSLER GROUP, LLC

1. Turn the ignition off.
2. Measure the resistance of the (V37) S/C Switch Sense 1 circuit between the Clockspring C8 harness connector and S/C Switch harness connector.
3. Measure the resistance of the (V937) Switch Return circuit between the Clockspring C8 harness connector and S/C Switch harness connector.

   Is the resistance above 5.0 Ohms for either reading?

Yes

- Replace the Steering Wheel Jumper harness in accordance with the service information.
- Perform the POWERTRAIN VERIFICATION TEST. Refer to **POWERTRAIN VERIFICATION TEST - 6.7L** .

No

- Go To 8.

8. **(V37) S/C SWITCH SENSE 1 CIRCUIT OPEN/HIGH RESISTANCE**
   1. Measure the resistance of the (V37) S/C Switch Sense 1 circuit between the Clockspring C2 harness connector and the of PCM C2 harness connector.

      Is the resistance below 5.0 Ohms?

      Yes

      - Go To 9.

      No

      - Repair the open in the (V37) S/C Switch Sense 1 circuit.
      - Perform the POWERTRAIN VERIFICATION TEST. Refer to **POWERTRAIN VERIFICATION TEST - 6.7L** .
9. **(V937) SWITCH RETURN CIRCUIT OPEN/HIGH RESISTANCE**
   1. Measure the resistance of the (V937) Switch Return circuit between the Clockspring C2 harness connector and the of PCM C2 harness connector.

      Is the resistance below 5.0 Ohms ?

      Yes

      - Go To 10.

      No

      - Repair the open in the (V937) Switch Return circuit.
      - Perform the POWERTRAIN VERIFICATION TEST. Refer to **POWERTRAIN VERIFICATION TEST - 6.7L** .
10. **SPEED CONTROL SWITCH VOLTAGE VALUES**
    1. Reconnect the S/C Switch harness connectors.
    2. Reconnect the Clockspring harness connectors.
    3. Reconnect the PCM C2 harness connector.
    4. Back probe the (V37) S/C Switch Sense 1 circuit and the (V38) S/C Switch Sense 2 circuit at the

PCM C2 harness connector.

CAUTION: Use only approved back probe tools when back probing a connector so as not to cause damage to the terminals or insulation of the connector. Damage to the terminals can cause poor terminal contact or retention. Damage to the insulation can introduce corrosion due to water infiltration.

5. Turn the ignition on.
6. Using the scan tool, monitor the S/C Switch voltage readings.
7. Using a Voltmeter check the voltage on the (V37) S/C Switch Sense 1 circuit and the (V38) S/C Switch Sense 2 circuit at the PCM C2 harness connector.
8. Monitor the Voltmeter.
9. Using the scan tool, monitor the S/C Switch voltage readings.

SWITCH POSITION	SWITCH No. 1 VOLTAGE VALUE	SWITCH No. 2 VOLTAGE VALUE
NO SWITCHES PRESSED	4.31 to 4.78 Volts	4.31 to 4.78 Volts
ON/OFF PRESSED	0.59 to 1.13 Volts	3.53 to 3.92 Volts
RES/ACCEL PRESSED	3.88 to 4.17 Volts	2.04 to 2.47 Volts
SET/DECEL PRESSED	3.16 to 3.56 Volts	1.17 to 1.56 Volts
CANCEL PRESSED	1.59 to 1.99 Volts	2.84 to 3.25 Volts

10. Compare the voltage readings on the Voltmeter to what the scan tool displayed.

    Are the voltage readings out of the listed specification and is there less than a 0.2 Volt difference between the Voltmeter switch values and the scan tool switch value?

    Yes

    - Replace the Speed Control Switch in accordance with the service information.
    - Perform the POWERTRAIN VERIFICATION TEST. Refer to **POWERTRAIN VERIFICATION TEST - 6.7L** .

    No

    - Go To 11.

11. **POWERTRAIN CONTROL MODULE (PCM)**
    1. Using the wiring diagram/schematic as a guide, inspect the wiring and connectors between the Speed Control Switch and the Powertrain Control Module (PCM).
    2. Look for any chafed, pierced, pinched or partially broken wires.
    3. Look for broken, bent, pushed out or corroded terminals. Verify that there is good pin to terminal contact in the Switch and Powertrain Control Module connectors.

4. Perform any Technical Service Bulletins that may apply.

   Were there any problems found?

   Yes

   - Repair as necessary.
   - Perform the POWERTRAIN VERIFICATION TEST. Refer to **POWERTRAIN VERIFICATION TEST - 6.7L** .

   No

   - Replace and program the Powertrain Control Module in accordance with the service information. Refer to **MODULE, POWERTRAIN CONTROL, 6.7L DIESEL, REMOVAL** and **PCM/ECM / TCM PROGRAMMING** .
   - Perform the POWERTRAIN VERIFICATION TEST. Refer to **POWERTRAIN VERIFICATION TEST - 6.7L** .

P0580-SPEED CONTROL SWITCH 1 CIRCUIT LOW

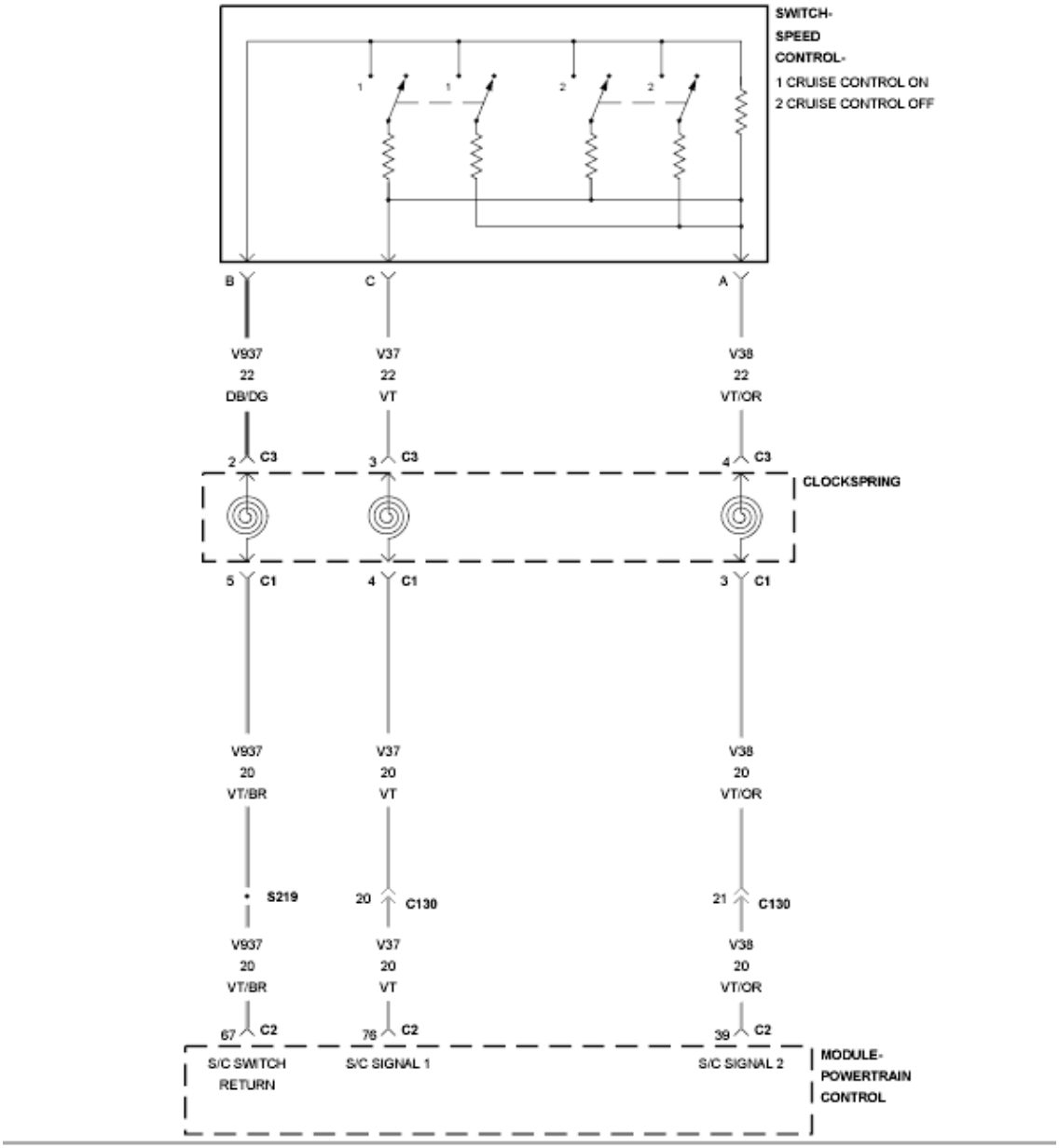

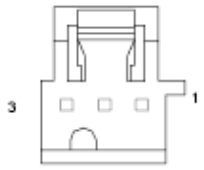

SWITCH-
SPEED
CONTROL

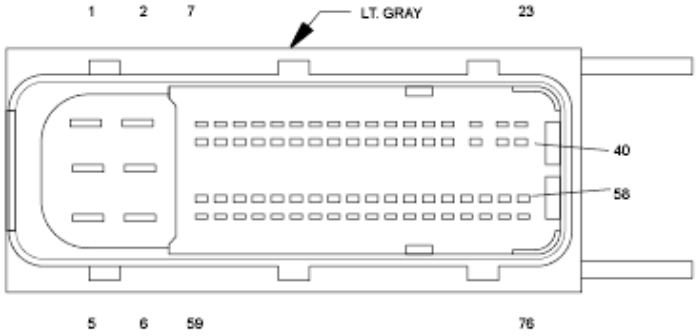

MODULE-
POWERTRAIN
CONTROL C2

Fig. 69: Speed Control Switch Circuit Schematic
Courtesy of CHRYSLER GROUP, LLC

For a complete wiring diagram, **refer to appropriate SYSTEM WIRING DIAGRAMS article** .

WHEN MONITORED:

While the ignition is on.

SET CONDITION:

Speed control MUX switch is below 1.0 Volt for five seconds.

POSSIBLE CAUSES

Possible Causes
S/C WIRING HARNESS OBSERVABLE PROBLEM S/C SWITCH (ON/OFF) S/C SWITCH (RESUME/ACCEL) (V37) S/C SWITCH 1 SIGNAL CIRCUIT SHORTED TO GROUND (V37) S/C SWITCH 1 SIGNAL CIRCUIT SHORTED TO THE (V937) SWITCH RETURN CIRCUIT CLOCKSPRING
POWERTRAIN CONTROL MODULE (PCM)

Always perform the Pre-Diagnostic Troubleshooting procedure before proceeding. Refer to PRE-DIAGNOSTIC TROUBLESHOOTING PROCEDURE - 6.7L .

DIAGNOSTIC TEST

1. **CHECK FOR THE S/C SWITCH VOLTAGE BELOW 1.0 VOLT**
    1. Turn the ignition on.
    2. With the scan tool, read the S/C Switch Volts status in the PCM.

       Is the S/C Switch voltage below 1.0 Volt?

       Yes

       - Go To 3.

       No

       - Go To 2.
2. **VISUALLY INSPECT THE S/C WIRING HARNESS**
    1. Turn the ignition off.
    2. Using the Schematics as a guide, inspect the Wiring and Connectors.

Were any problems found?

Yes

- Repair as necessary.
- Perform the POWERTRAIN VERIFICATION TEST - 6.7L. Refer to **POWERTRAIN VERIFICATION TEST - 6.7L** .

No

- Go To 3.

3. **CHECK THE S/C SWITCH (ON/OFF)**
   1. Turn the ignition off.
   2. Disconnect the S/C ON/OFF Switch harness connector.

      NOTE: Check connectors - Clean/repair as necessary.

   3. Turn the ignition on.
   4. With the scan tool in Sensors, read the S/C Switch Volts in the PCM.

      Did the S/C Switch Volts change to 5.0 Volts?

      Yes

      - Replace the S/C ON/OFF Switch in accordance with the service information.
      - Perform the POWERTRAIN VERIFICATION TEST - 6.7L. Refer to **POWERTRAIN VERIFICATION TEST - 6.7L** .

      No

      - Go To 4.

4. **CHECK THE S/C SWITCH (RESUME/ACCEL)**
   1. Turn the ignition off.
   2. Disconnect the S/C RESUME/ACCEL Switch harness connector.

      NOTE: Check connectors - Clean/repair as necessary.

   3. Ignition on, engine not running.
   4. With the scan tool in Sensors, read the S/C Switch volts in the PCM.

      Did the S/C Switch Volts go above 4.0 Volts?

      Yes

- Replace the Resume/Accel Switch in accordance with the service information.
- Perform the POWERTRAIN VERIFICATION TEST - 6.7L. Refer to **POWERTRAIN VERIFICATION TEST - 6.7L** .

No

- Go To 5.

5. **CHECK THE CLOCKSPRING**
   1. Turn the ignition off.
   2. Disconnect the Clockspring harness connector (instrument panel wiring side).
   3. Turn the ignition on.
   4. With the scan tool in Sensors, read the S/C Switch Volts in the PCM.

      Did the S/C Switch Volts change to 5.0 Volts?

      Yes

      - Replace the Clockspring in accordance with the Service Information.
      - Perform the POWERTRAIN VERIFICATION TEST - 6.7L. Refer to **POWERTRAIN VERIFICATION TEST - 6.7L** .

      No

      - Go To 6.

6. **CHECK THE (V37) S/C SWITCH 1 SIGNAL CIRCUIT FOR A SHORT TO GROUND**
   1. Turn the ignition off.
   2. Disconnect the S/C ON/OFF Switch harness connector.
   3. Disconnect the PCM C2 harness connector.

      NOTE: Check connectors - Clean/repair as necessary.

   4. Measure the resistance between ground and the (V37) S/C Switch 1 Signal circuit at the S/C ON/OFF Switch harness connector.

      Is the resistance below 10k Ohms?

      Yes

      - Repair the (V37) S/C Switch 1 Signal circuit for a short to ground.
      - Perform the POWERTRAIN VERIFICATION TEST - 6.7L. Refer to **POWERTRAIN VERIFICATION TEST - 6.7L** .

      No

- Go To 7.

7. **CHECK FOR THE (V37) S/C SWITCH 1 SIGNAL CIRCUIT SHORTED TO THE (V937) S/C SWITCH RETURN CIRCUIT**

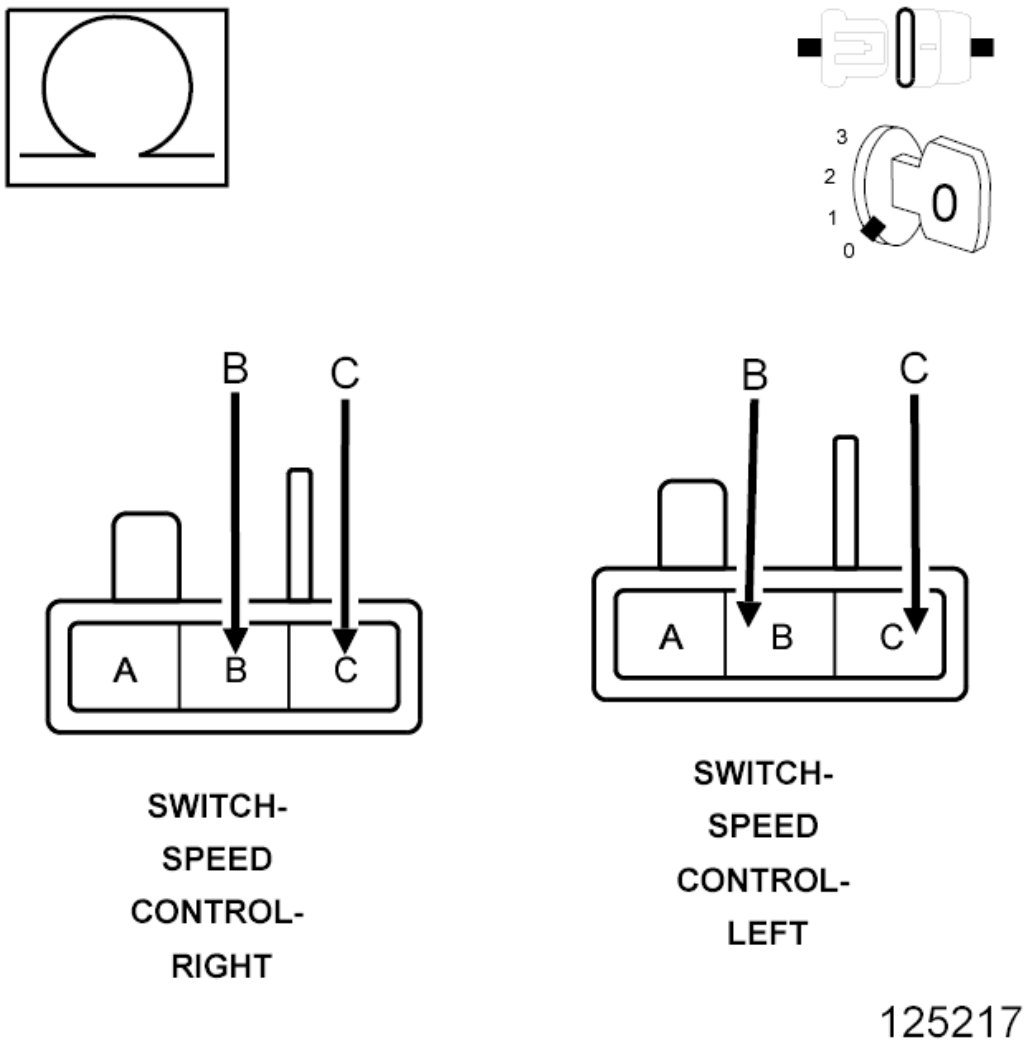

Fig. 70: Speed Control Switch Connector Pin ID
Courtesy of CHRYSLER GROUP, LLC

1. Measure the resistance between the (V37) S/C Switch Signal circuit and the (V937) S/C Switch Return circuit at the ON/OFF switch harness connector.

   Is the resistance below 10k Ohms?

   Yes

   - Repair the short between the (V37) S/C Switch 1 Signal circuit and the (V937) S/C Switch Return circuit.

- Perform the POWERTRAIN VERIFICATION TEST - 6.7L. Refer to **POWERTRAIN VERIFICATION TEST - 6.7L** .

No

- Replace and program the Powertrain Control Module in accordance with the service information. Refer to **MODULE, POWERTRAIN CONTROL, 6.7L DIESEL, REMOVAL** and **PCM/ECM / TCM PROGRAMMING** .
- Perform the POWERTRAIN VERIFICATION TEST - 6.7L. Refer to **POWERTRAIN VERIFICATION TEST - 6.7L** .

P0581-SPEED CONTROL SWITCH 1 CIRCUIT HIGH

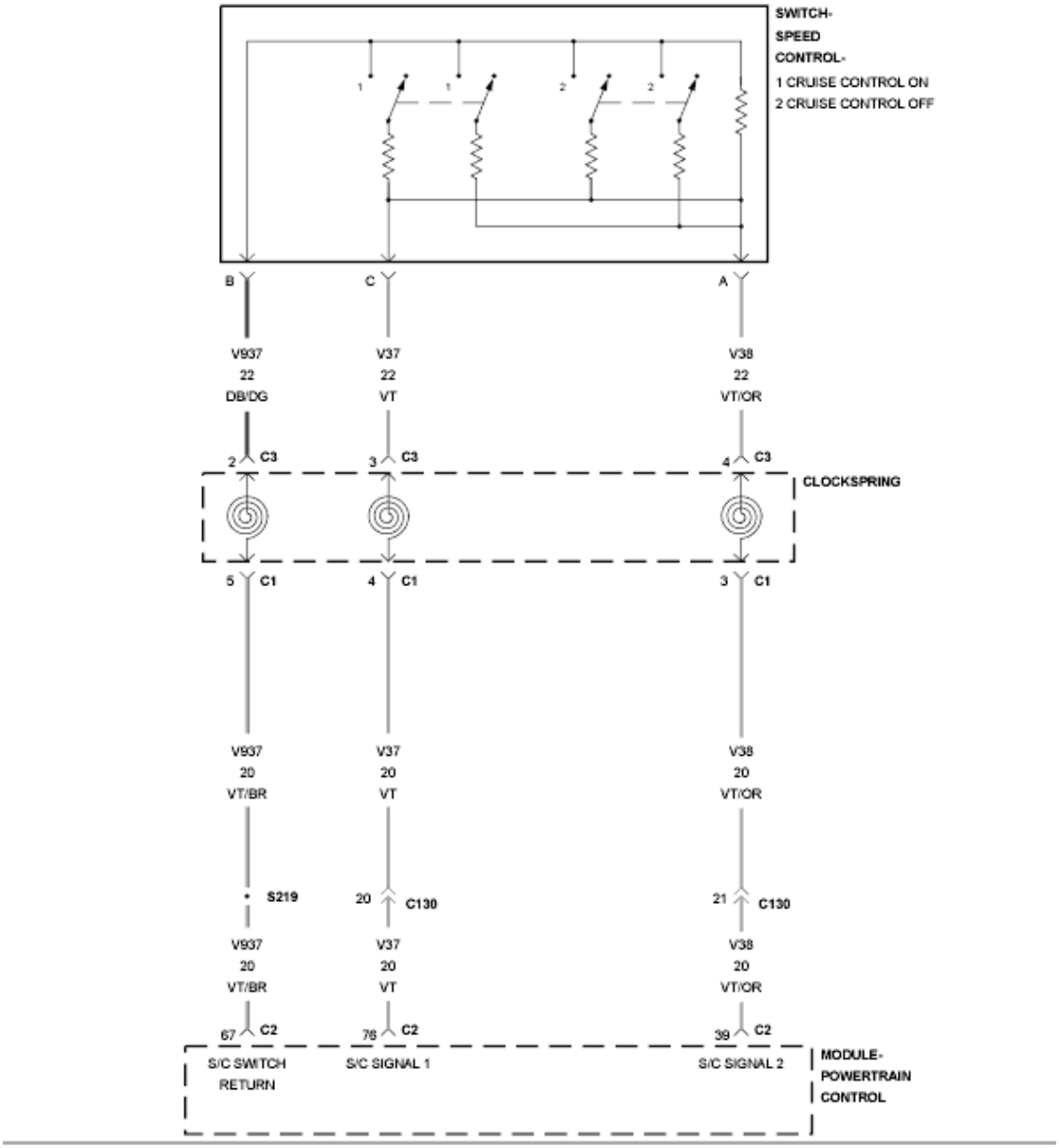

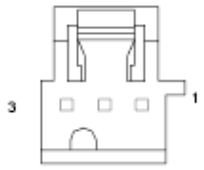

SWITCH-
SPEED
CONTROL

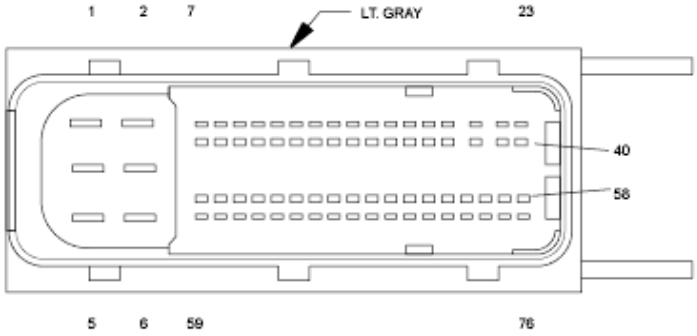

MODULE-
POWERTRAIN
CONTROL C2

Fig. 71: Speed Control Switch Circuit Schematic
Courtesy of CHRYSLER GROUP, LLC

For a complete wiring diagram, **refer to appropriate SYSTEM WIRING DIAGRAMS article** .

WHEN MONITORED:

Key on or engine running.

SET CONDITION:

Speed Control MUX switch is above 11.5 Volts for five seconds.

POSSIBLE CAUSES

Possible Causes
S/C WIRING HARNESS OBSERVABLE PROBLEM (V37) S/C SWITCH 1 SIGNAL CIRCUIT SHORTED TO VOLTAGE (V37) S/C SWITCH 1 SIGNAL CIRCUIT OPEN PCM TO CLOCK SPRING (V37) S/C SWITCH 1 SIGNAL CIRCUIT OPEN CLOCKSPRING TO S/C SWITCH (V937) S/C SWITCH RETURN CIRCUIT OPEN CLOCKSPRING TO S/C SWITCH (V937) S/C SWITCH RETURN CIRCUIT OPEN PCM TO CLOCKSPRING SPEED CONTROL ON/OFF SWITCH
CLOCKSPRING
POWERTRAIN CONTROL MODULE (PCM)

Always perform the Pre-Diagnostic Troubleshooting procedure before proceeding. Refer to PRE-DIAGNOSTIC TROUBLESHOOTING PROCEDURE - 6.7L .

DIAGNOSTIC TEST

1. **SCAN TOOL SHOWS SPEED CONTROL SWITCH ON/OFF**
    1. Turn the ignition on.
    2. With the scan tool in Inputs/Outputs, read the Speed Control inputs state in PCM.
    3. While monitoring the scan tool, push the Speed Control On/Off Switch several times, then leave it on.

    Did the scan tool show Speed Control Switch off and on?

    Yes

    - Perform the INTERMITTENT CONDITION diagnostic procedure. Refer to **INTERMITTENT CONDITION - 6.7L** .

    No

- Go To 2.

2. **VISUALLY INSPECT THE S/C WIRING HARNESS**
    1. Turn the ignition off.
    2. Using the Schematics as a guide, inspect the wiring and connectors.

    Were any problems found?

    Yes

    - Repair as necessary.
    - Perform the POWERTRAIN VERIFICATION TEST - 6.7L. Refer to **POWERTRAIN VERIFICATION TEST - 6.7L** .

    No

    - Go To 3.

3. **CLOCKSPRING**

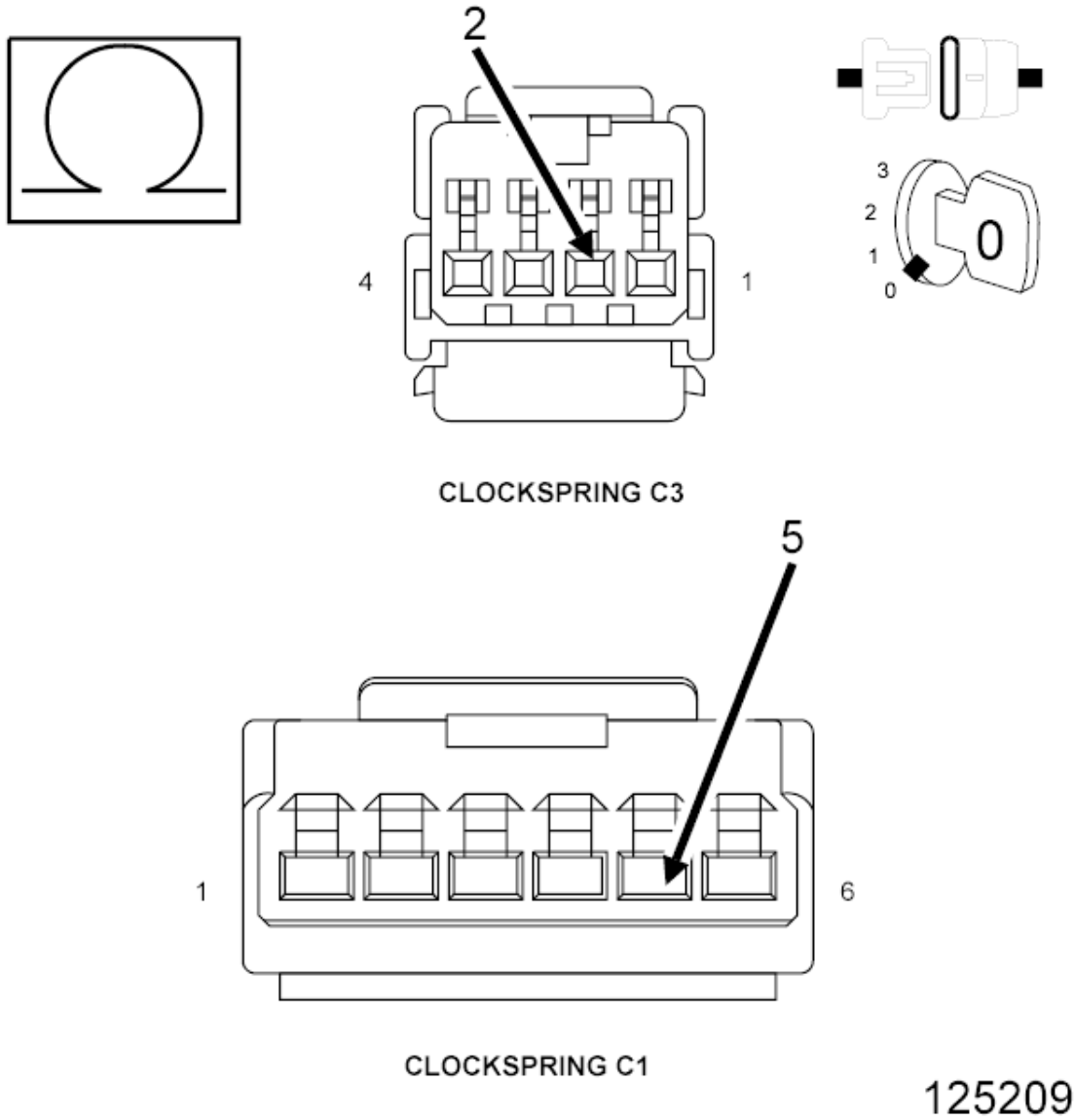

Fig. 72: Measuring Resistance Of S/C Switch Return Circuit Between Upper And Lower Clockspring Harness Connectors
Courtesy of CHRYSLER GROUP, LLC

1. Disconnect the C1 and C3 Clockspring harness connectors.

   NOTE: Check connectors - Clean/repair as necessary.

2. Measure the resistance of the (V937) S/C Switch Return circuit between the Clockspring C1 and C3 harness connectors.

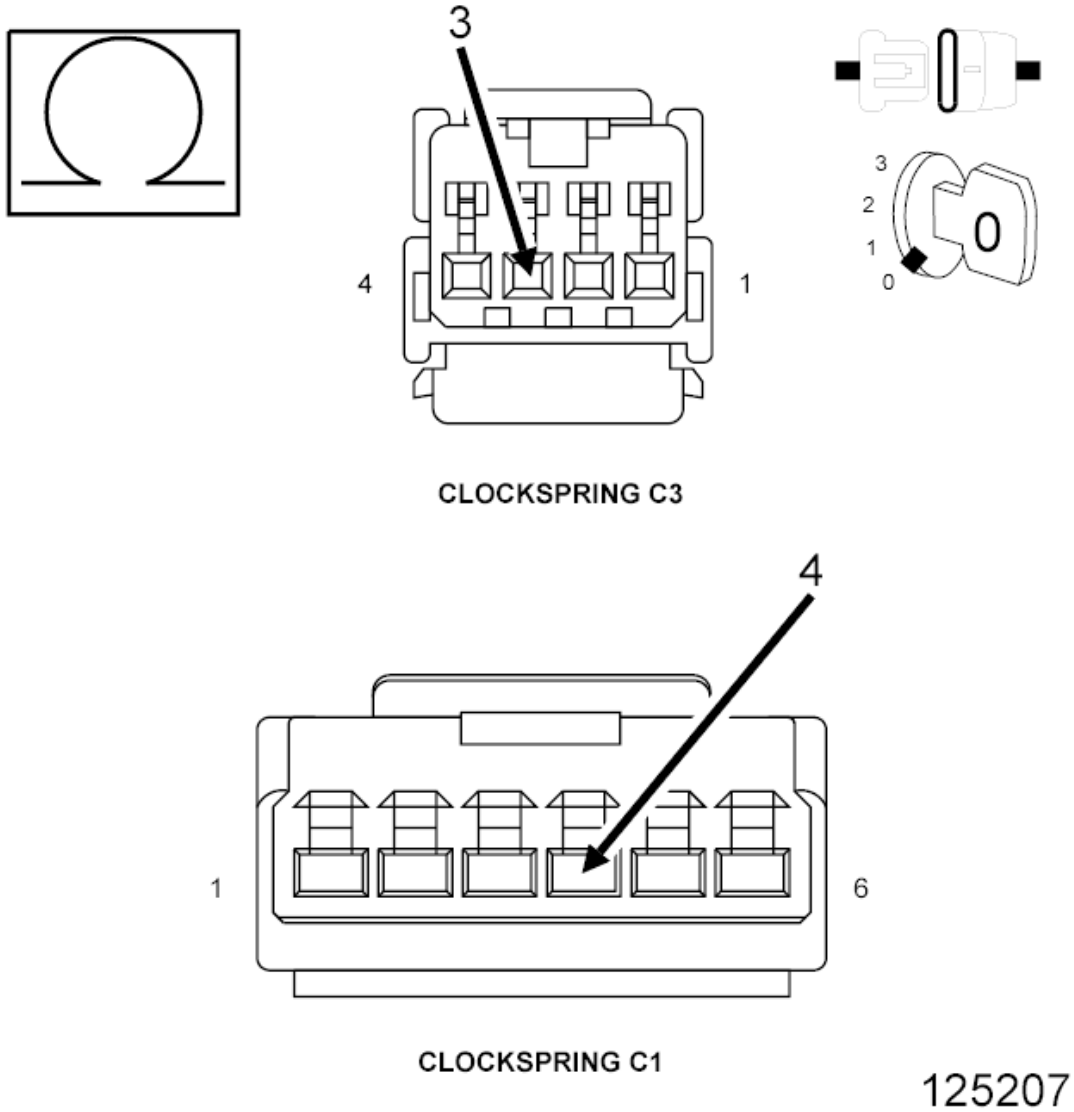

Fig. 73: Measuring Resistance Of S/C Switch Signal Circuit Between Upper And Lower Clockspring Harness Connectors
Courtesy of CHRYSLER GROUP, LLC

3. Measure the resistance of the (V37) S/C Switch 1 Signal circuit between the C1 and C3 harness connectors.

   Was the resistance above 5.0 Ohms for either circuit?

   Yes

   - Replace the Clockspring in accordance with the service information.
   - Perform the POWERTRAIN VERIFICATION TEST - 6.7L. Refer to **POWERTRAIN VERIFICATION TEST - 6.7L** .

No

- Go To 4.

4. **CHECK THE SPEED CONTROL ON/OFF SWITCH**
   1. Disconnect the Speed Control On/Off Switch 2-way harness connector only.

      NOTE: Check connectors - Clean/repair as necessary.

   2. Measure the resistance across the S/C On/Off Switch.

      Is the resistance between 20.3K and 20.7K Ohms?

      Yes

      - Go To 5.

      No

      - Replace the On/Off Switch in accordance with the service information.
      - Perform the POWERTRAIN VERIFICATION TEST - 6.7L. Refer to **POWERTRAIN VERIFICATION TEST - 6.7L** .

5. **CHECK THE (V37) S/C SWITCH 1 SIGNAL CIRCUIT FOR A SHORT TO VOLTAGE**

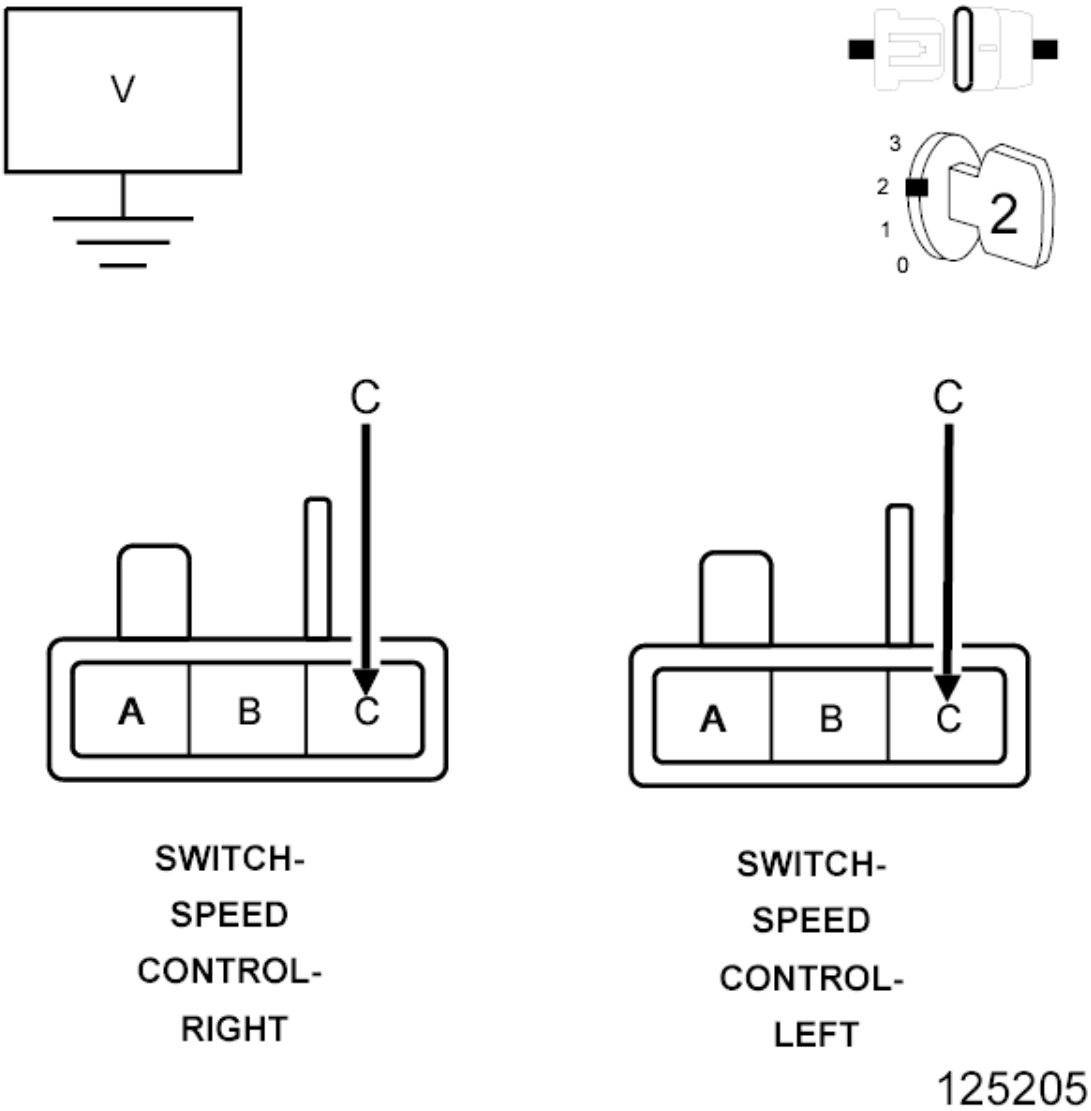

Fig. 74: Speed Control Switch Connector Pin ID
Courtesy of CHRYSLER GROUP, LLC

1. Turn the ignition on.
2. Measure the voltage of the (V37) S/C Switch 1 Signal circuit at the On/Off Switch connector.

   Is the voltage above 6.0 Volts?

   Yes

   - Repair the (V37) Switch 1 Signal circuit for a short to voltage.
   - Perform the POWERTRAIN VERIFICATION TEST - 6.7L. Refer to **POWERTRAIN VERIFICATION TEST - 6.7L** .

   No

- Go To 6.

6. **CHECK THE (V37) S/C SWITCH 1 SIGNAL CIRCUIT FOR AN OPEN BETWEEN THE PCM AND CLOCKSPRING**
   1. Turn the ignition off.
   2. Disconnect the PCM C2 harness connector.

      NOTE: Check connectors - Clean/repair as necessary.

   3. Measure the resistance of the (V37) S/C Switch 1 Signal circuit between the PCM C2 harness connector and the Clockspring C1 harness connector.

      Is the resistance below 5.0 Ohms?

      Yes

      - Go To 7.

      No

      - Repair the open in the (V37) S/C Switch 1 Signal circuit between the PCM and Clockspring.
      - Perform the POWERTRAIN VERIFICATION TEST - 6.7L. Refer to **POWERTRAIN VERIFICATION TEST - 6.7L** .

7. **CHECK THE (V37) S/C SWITCH 1 SIGNAL CIRCUIT FOR AN OPEN BETWEEN THE CLOCKSPRING AND S/C SWITCH**

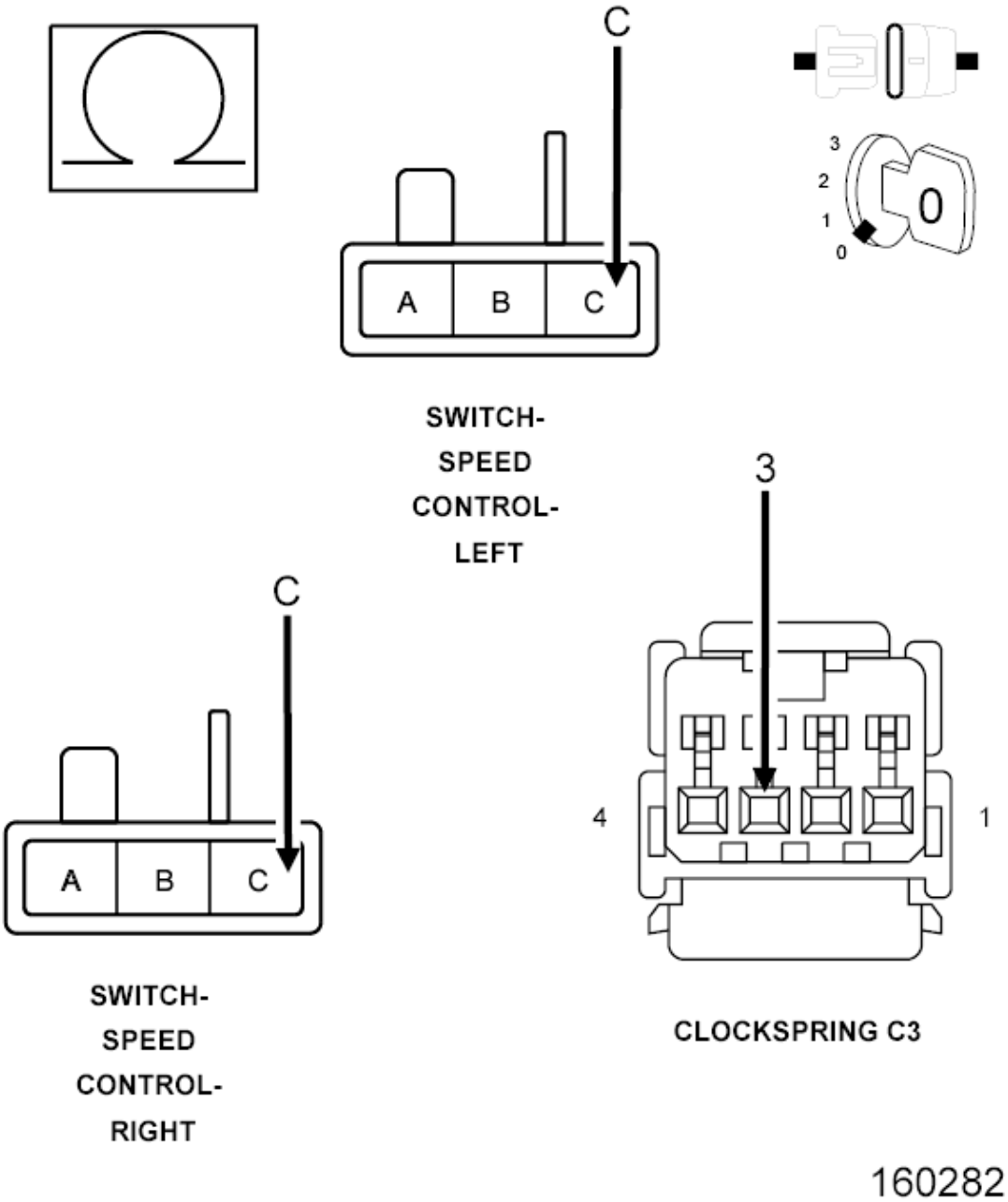

Fig. 75: Checking S/C Switch 1 Signal Circuit For Open Between Clockspring & S/C Switch
Courtesy of CHRYSLER GROUP, LLC

1. Measure the resistance of the (V37) S/C Switch 1 Signal circuit from the Clockspring C3 harness connector to the S/C switch harness connectors.

   Is the resistance below 5.0 Ohms?

   Yes

   - Go To 8.

No

- Repair the open in the (V37) S/C Switch 1 Signal circuit between the Clockspring and S/C Switches.
- Perform the POWERTRAIN VERIFICATION TEST - 6.7L. Refer to **POWERTRAIN VERIFICATION TEST - 6.7L** .

8. **CHECK THE (V937) S/C SWITCH RETURN CIRCUIT FOR AN OPEN BETWEEN THE CLOCKSPRING AND S/C SWITCH**

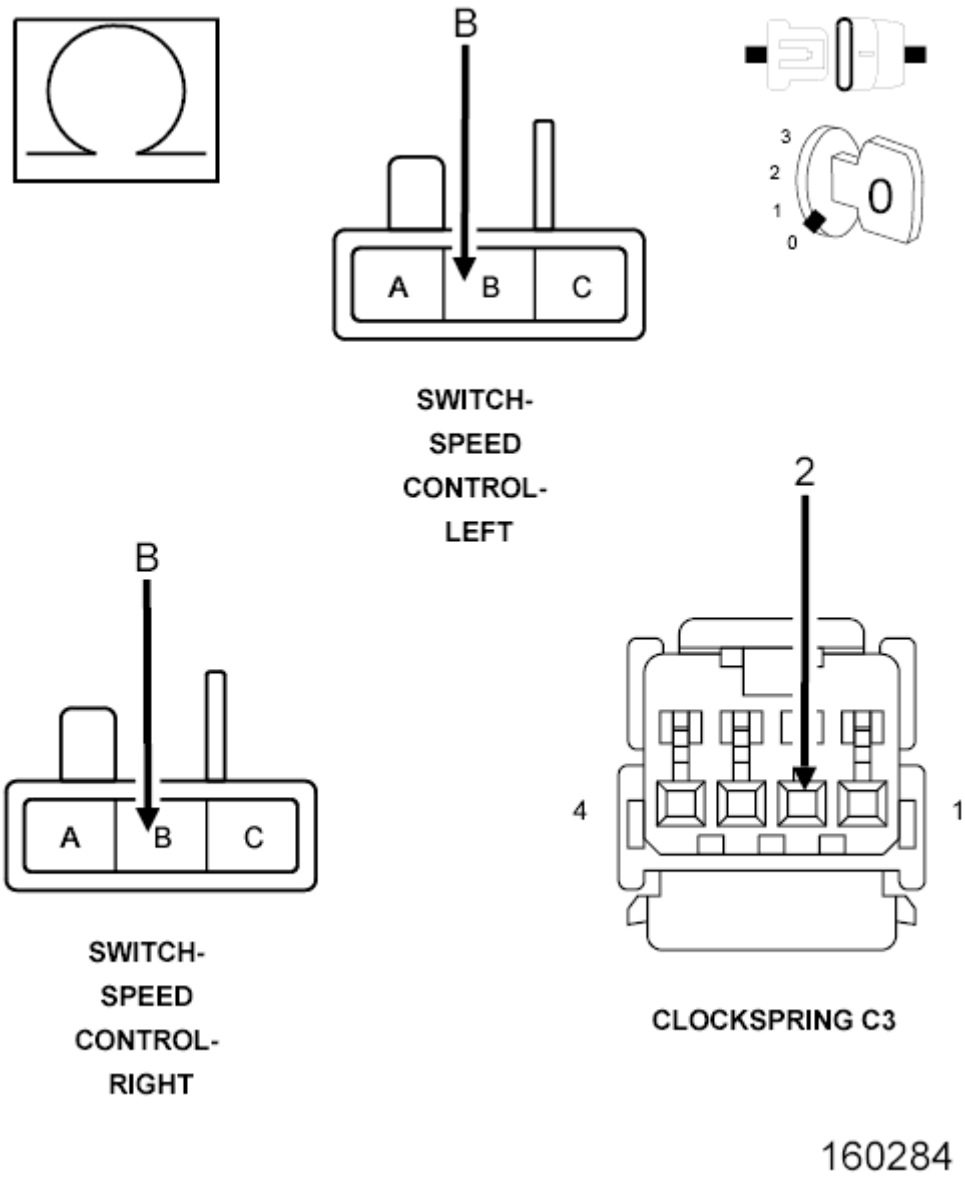

Fig. 76: Checking S/C Switch Return Circuit Open Clockspring To S/C Switch
Courtesy of CHRYSLER GROUP, LLC

1. Measure the resistance of the (V937) S/C Switch Return circuit between the S/C Switch harness connectors to the Clockspring C3 harness connector.

Is the resistance below 5.0 Ohms?

Yes

- Go To 9.

No

- Repair the open in the (V937) S/C Switch Return circuit between the Clockspring and the S/C Switches.
- Perform the POWERTRAIN VERIFICATION TEST - 6.7L. Refer to **POWERTRAIN VERIFICATION TEST - 6.7L** .

9. **CHECK THE (V937) S/C SWITCH RETURN CIRCUIT FOR AN OPEN BETWEEN THE PCM AND CLOCKSPRING**
   1. Measure the resistance of the (V937) S/C Switch Return circuit between the PCM harness connector and the Clockspring C1 harness connector.

      Is the resistance below 5.0 Ohms?

      Yes

      - Replace and program the Powertrain Control Module in accordance with the service information. Refer to **MODULE, POWERTRAIN CONTROL, 6.7L DIESEL, REMOVAL** and **PCM/ECM / TCM PROGRAMMING** .
      - Perform the POWERTRAIN VERIFICATION TEST - 6.7L. Refer to **POWERTRAIN VERIFICATION TEST - 6.7L** .

      No

      - Repair the open in the (V937) S/C Switch Return circuit from between the PCM and Clockspring.
      - Perform the POWERTRAIN VERIFICATION TEST - 6.7L. Refer to **POWERTRAIN VERIFICATION TEST - 6.7L** .

P0585-SPEED CONTROL SWITCH 1/2 CORRELATION

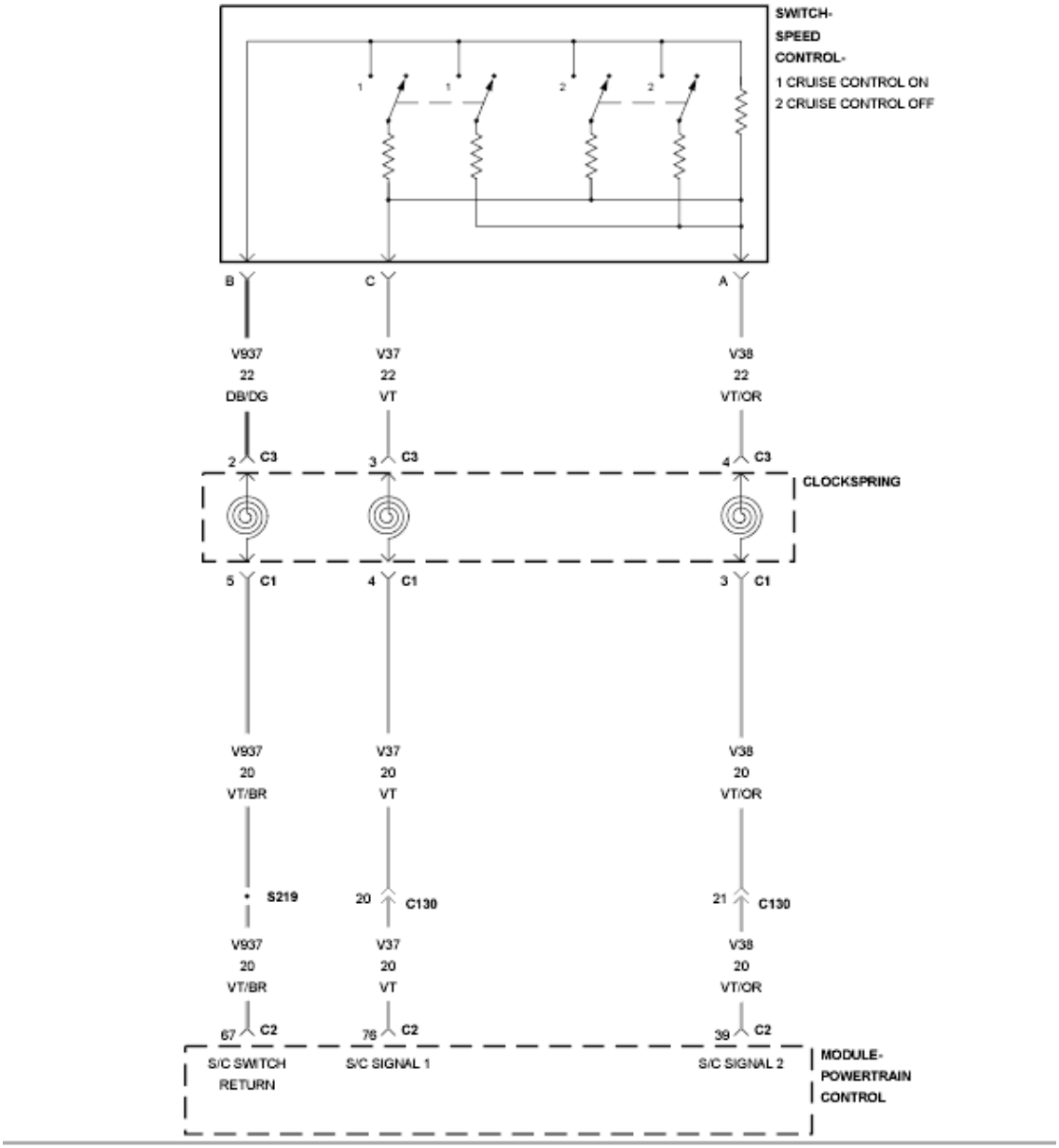

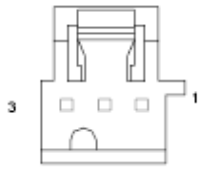

SWITCH-
SPEED
CONTROL

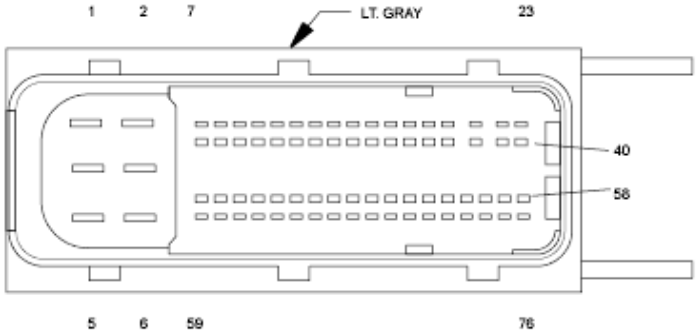

MODULE-
POWERTRAIN
CONTROL C2

Fig. 77: Speed Control Switch Circuit Schematic
Courtesy of CHRYSLER GROUP, LLC

For a complete wiring diagram, **refer to appropriate SYSTEM WIRING DIAGRAMS article** .

WHEN MONITORED:

Ignition on.

SET CONDITION:

Speed control switches do not correlate with each other.

POSSIBLE CAUSES

Possible Causes
SPEED CONTROL SWITCHES

Always perform the Pre-Diagnostic Troubleshooting procedure before proceeding. Refer to PRE-DIAGNOSTIC TROUBLESHOOTING PROCEDURE - 6.7L .

DIAGNOSTIC TEST

1. **SPEED CONTROL SWITCHES**

   View repair

   Repair

   - Replace both speed control switches.
   - Perform the POWERTRAIN VERIFICATION TEST - 6.7L. Refer to **POWERTRAIN VERIFICATION TEST - 6.7L** .

P0591-SPEED CONTROL SWITCH 2 PERFORMANCE

For a complete wiring diagram, **refer to appropriate SYSTEM WIRING DIAGRAMS article** .

WHEN MONITORED:

With the ignition key on.

SET CONDITION:

Speed Control (S/C) switch voltage output is not out of range but it does not equal any of the values for any of the button positions. One trip fault.

POSSIBLE CAUSES

Possible Causes
(V38) S/C SWITCH SENSE 2 CIRCUIT OPEN
(V38) S/C SWITCH SENSE 2 CIRCUIT SHORTED TO VOLTAGE
(V937) S/C SWITCH RETURN CIRCUIT OPEN
(V38) S/C SWITCH SENSE 2 CIRCUIT SHORTED TO GROUND
(V38) S/C SWITCH SENSE 2 CIRCUIT SHORTED TO THE (V937) S/C SWITCH RETURN CIRCUIT
SPEED CONTROL SWITCH
CLOCKSPRING
POWERTRAIN CONTROL MODULE (PCM)

Always perform the Pre-Diagnostic Troubleshooting procedure before proceeding. Refer to PRE-DIAGNOSTIC TROUBLESHOOTING PROCEDURE - 6.7L .

DIAGNOSTIC TEST

1. **ACTIVE DIAGNOSTIC TROUBLE CODE (DTC)**
   1. Start the engine and allow it to idle for at least 60 seconds.

      WARNING: **When the engine is operating, do not stand in direct line with the fan. Do not put your hands near the pulleys, belts, or fan. Do not wear loose clothing. Failure to follow these instructions can result in possible serious or fatal injury.**

      NOTE: **It may be necessary to test drive the vehicle and operate the speed control in order for this DTC to set.**

   2. Using the scan tool, select View DTCs.

      Is the DTC Active at this time?

      Yes

      - Go To 2.

      No

      - Perform the INTERMITTENT CONDITION diagnostic procedure. Refer to **INTERMITTENT CONDITION - 6.7L** .
2. **SPEED CONTROL SWITCH**
   1. Turn the ignition off.
   2. Disconnect the Speed Control Switch harness connector in accordance with the service information.
   3. Measure the resistance between (V38) S/C Switch Sense 2 circuit and the (V937) Switch Return

circuit.

4. Monitor the Ohmmeter while pressing each function button on each switch.
5. The following resistance specs are taken between terminals (V38) S/C Switch Sense 2 circuit and the (V937) Switch Return circuit of the switch when holding the switch button in the following position:
    - Not pressing any switch - 20.5k Ohms
    - On/Off - 6.2k Ohms
    - Set/Decel - 0.79k Ohms
    - Cancel - 3.2k Ohms
    - Resume/Accel - 1.7k Ohms

    Does the function on the Speed Control Switch have the correct resistance value +/- 0.2 Ohm?

    Yes

    - Go To 3.

    No

    - Replace the Speed Control Switch in accordance with the service information.
    - Perform the POWERTRAIN VERIFICATION TEST. Refer to **POWERTRAIN VERIFICATION TEST - 6.7L** .

3. **(V38) S/C SWITCH SENSE 2 CIRCUIT SHORTED TO VOLTAGE**

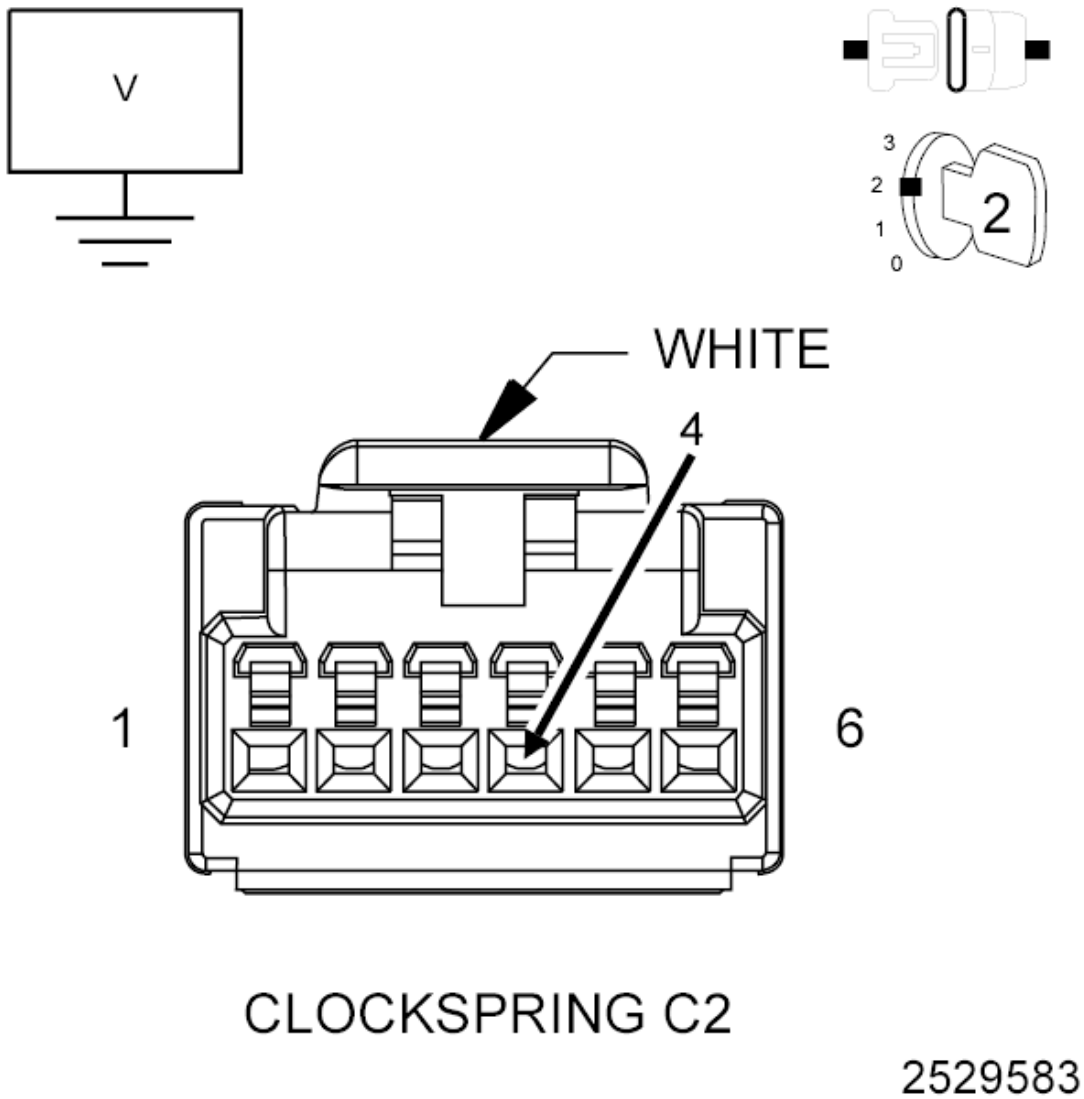

Fig. 78: Measuring Voltage On S/C Switch Sense Circuit In Clockspring C2 Harness Connector
Courtesy of CHRYSLER GROUP, LLC

1. Disconnect the Clockspring C2 harness connector in accordance with the service information.
2. Turn the ignition on.
3. Measure the voltage on the (V38) S/C Switch Sense 2 circuit in the Clockspring C2 harness connector.

   Is the voltage reading above 5.2 volts?

   Yes

   - Repair the short to voltage in the (V38) S/C Switch Sense 2 circuit.
   - Perform the POWERTRAIN VERIFICATION TEST. Refer to **POWERTRAIN VERIFICATION TEST - 6.7L** .

No

- Go To 4.

4. **(V38) S/C SWITCH SENSE 2 CIRCUIT SHORTED TO GROUND**

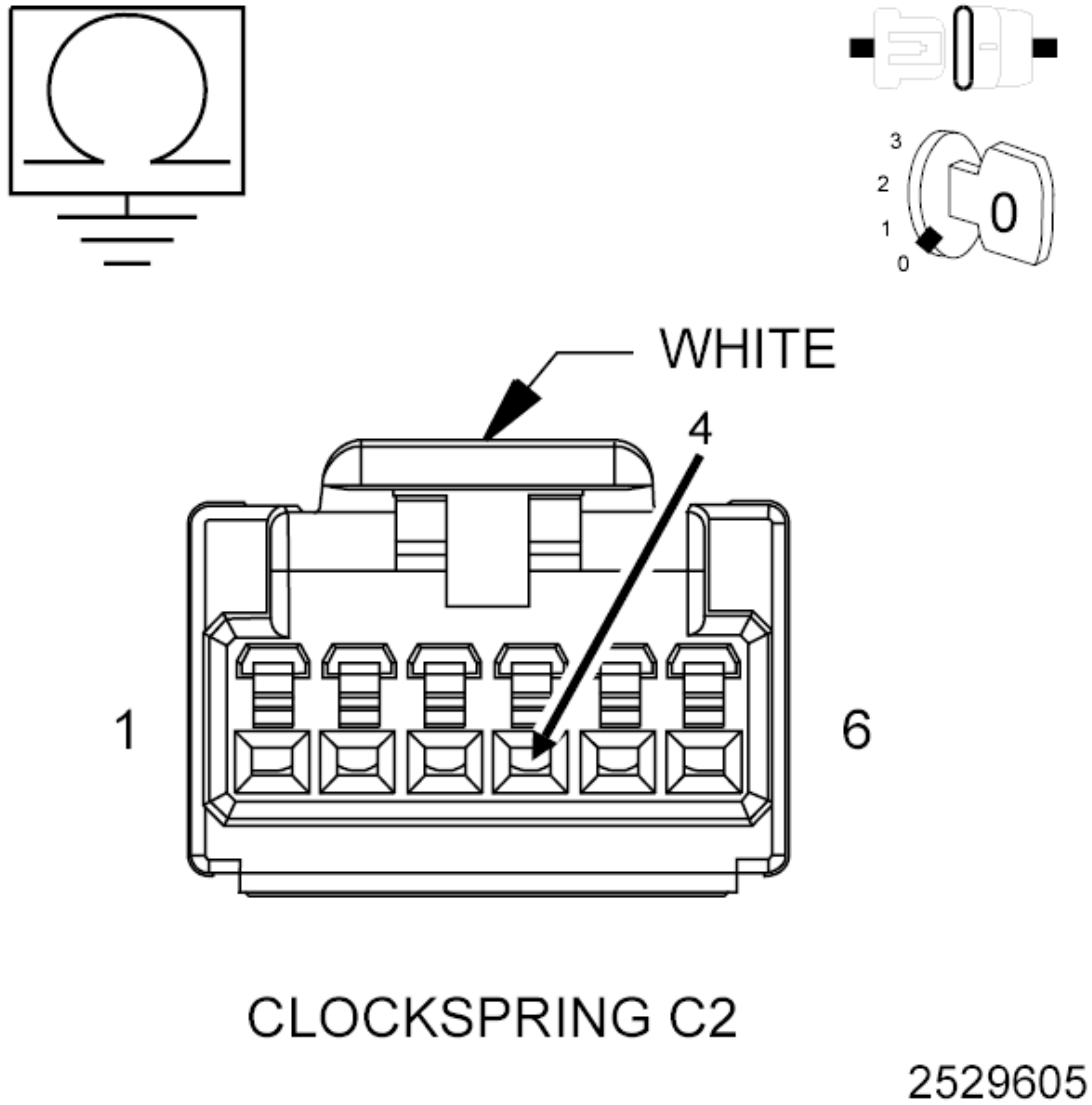

Fig. 79: Measuring Resistance Between Ground And (V72) S/C Switch Sense 2 Circuit In Clockspring C2 Harness Connector
Courtesy of CHRYSLER GROUP, LLC

1. Turn the ignition off.
2. Disconnect the PCM C2 harness connector.
3. Measure the resistance between ground and the (V38) S/C Switch Sense 2 circuit at the Clockspring C2 harness connector.

   Is the resistance above 10k Ohms?

Yes

- Go To 5.

No

- Repair the short to ground in the (V38) S/C Switch Sense 2 circuit.
- Perform the POWERTRAIN VERIFICATION TEST. Refer to **POWERTRAIN VERIFICATION TEST - 6.7L** .

5. **(V38) S/C SWITCH SENSE 2 CIRCUIT SHORTED TO THE (V937) S/C SWITCH RETURN CIRCUIT**

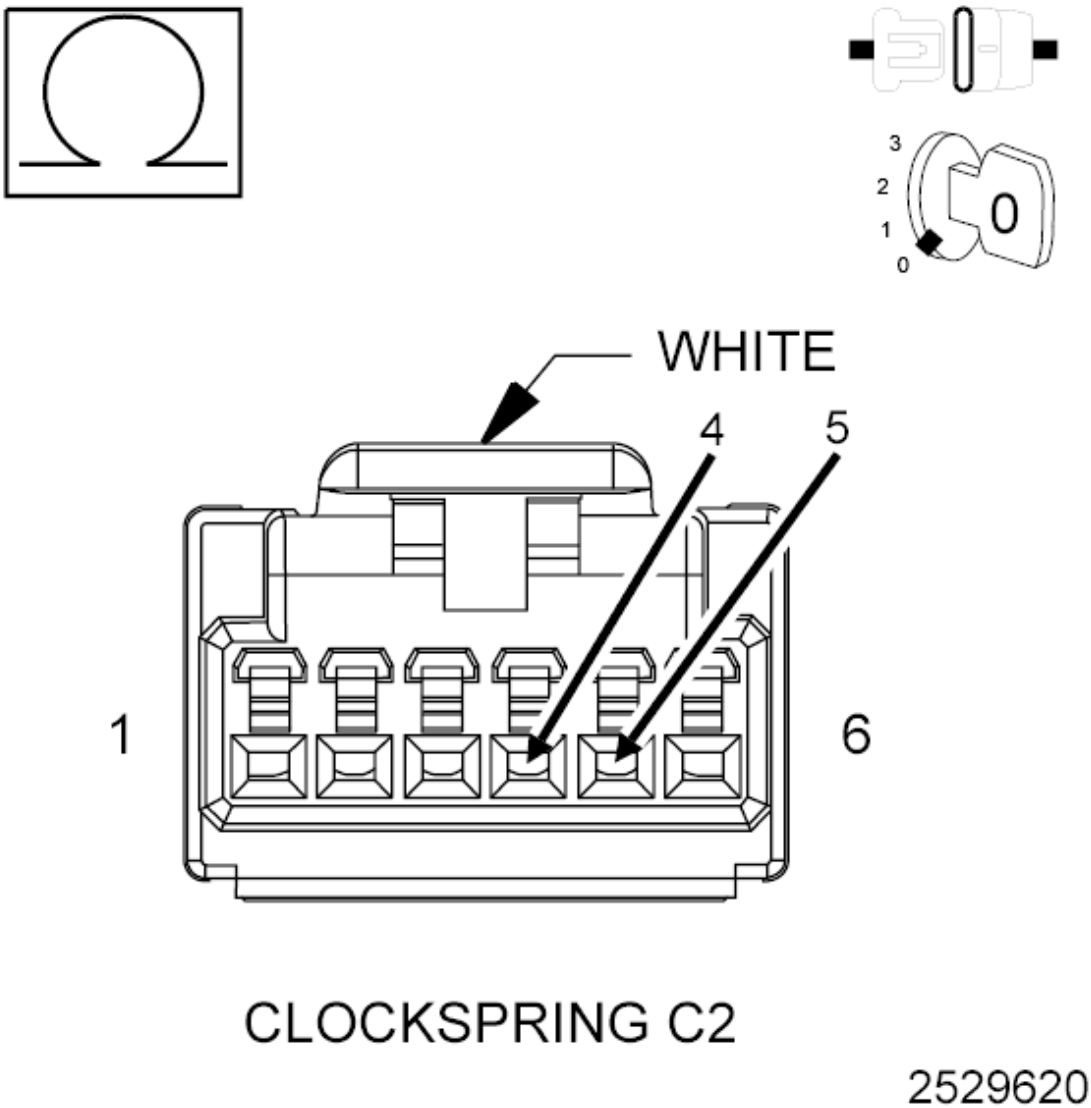

Fig. 80: Measuring Resistance Between S/C Switch Sense Circuit And S/C Switch Return Circuit In Clockspring C2 Harness Connector
Courtesy of CHRYSLER GROUP, LLC

1. Measure the resistance between the (V38) S/C Switch Sense 2 circuit and the (V937) S/C Switch Return circuit in the Clockspring C2 harness connector.

   Is the resistance above 10k Ohms?

   Yes

   - Go To 6.

   No

   - Repair the short between the (V38) S/C Switch Sense 2 circuit and the (V937) Switch Return circuit.
   - Perform the POWERTRAIN VERIFICATION TEST. Refer to **POWERTRAIN VERIFICATION TEST - 6.7L** .

6. **CLOCKSPRING**
   1. Disconnect the Clockspring C8 harness connector.
   2. Measure the resistance of the (V38) S/C Switch Sense 2 circuit between the Clockspring C2 and C8 at the Clockspring connectors.
   3. Measure the resistance of the (V937) Switch Return circuit between the Clockspring C2 and C8 at the Clockspring connectors.

      Is the resistance above 5.0 Ohms for either reading?

      Yes

      - Replace the Clockspring in accordance with the service information.
      - Perform the POWERTRAIN VERIFICATION TEST. Refer to **POWERTRAIN VERIFICATION TEST - 6.7L** .

      No

      - Go To 7.

7. **STEERING WHEEL JUMPER HARNESS**

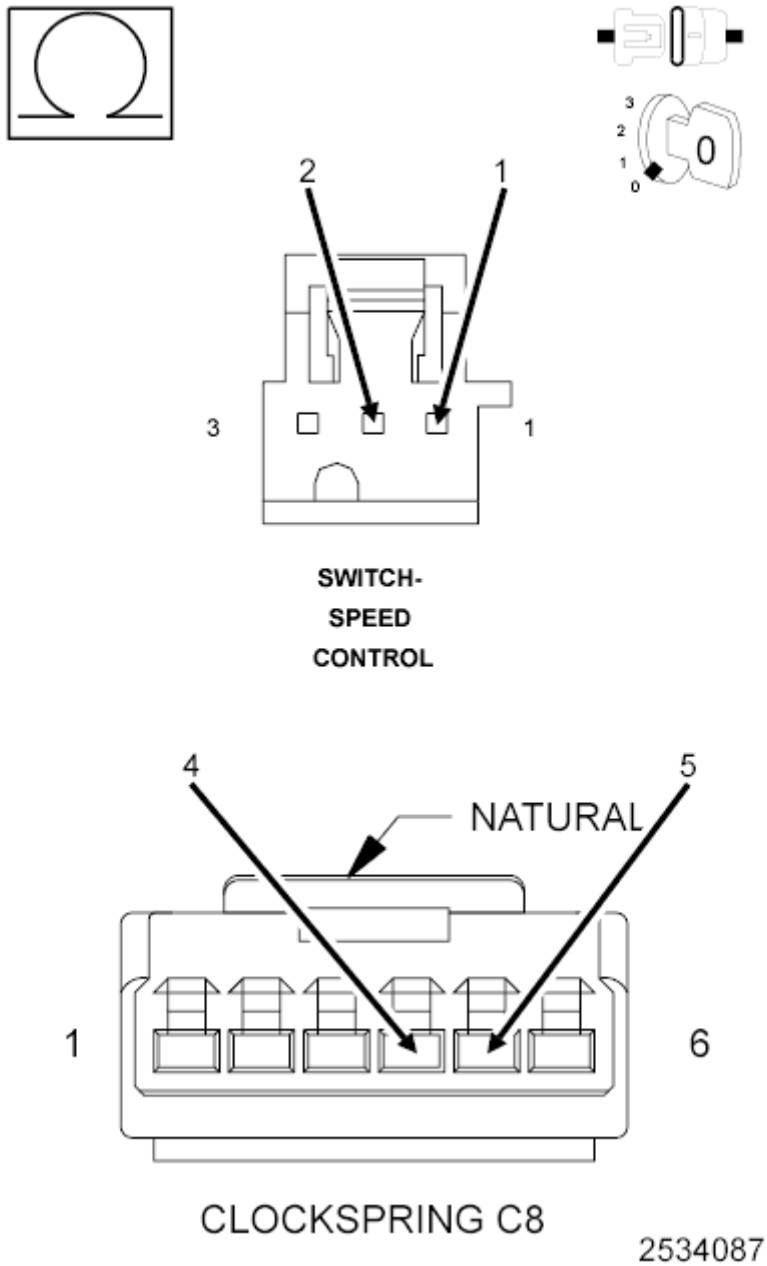

Fig. 81: Measuring Resistance Of S/C Switch Sense 2 Circuit Switch Return Circuit Between Clockspring Harness Connector And S/C Switch Harness Connector
Courtesy of CHRYSLER GROUP, LLC

1. Measure the resistance of the (V38) S/C Switch Sense 2 circuit between the Clockspring C8 harness connector and S/C Switch harness connector.
2. Measure the resistance of the (V937) Switch Return circuit between the Clockspring C8 harness connector and S/C Switch harness connector.

   Is the resistance above 5.0 Ohms for either reading?

Yes

- Replace the Steering Wheel Jumper harness in accordance with the service information.
- Perform the POWERTRAIN VERIFICATION TEST. Refer to **POWERTRAIN VERIFICATION TEST - 6.7L** .

No

- Go To 8.

8. **(V937) S/C SWITCH RETURN OPEN**
   1. Measure the resistance of the (V937) S/C Switch Return circuit between the Clockspring C2 harness connector and the of PCM C2 harness connector.

      Is the resistance below 5.0 Ohms?

      Yes

      - Go To 9.

      No

      - Repair the open in the (V937) S/C Switch Return circuit.
      - Perform the POWERTRAIN VERIFICATION TEST. Refer to **POWERTRAIN VERIFICATION TEST - 6.7L** .
9. **(V38) S/C SWITCH SENSE 2 CIRCUIT OPEN**
   1. Measure the resistance of the (V38) S/C Switch Sense 2 circuit between the Clockspring C2 harness connector and the of PCM C2 harness connector.

      Is the resistance below 5.0 Ohms?

      Yes

      - Go To 10.

      No

      - Repair the open in the (V38) S/C Switch Sense 2 circuit.
      - Perform the POWERTRAIN VERIFICATION TEST. Refer to **POWERTRAIN VERIFICATION TEST - 6.7L** .
10. **SPEED CONTROL SWITCH VOLTAGE VALUES**
    1. Reconnect the Speed Control Switch harness connector.
    2. Reconnect the Clockspring harness connectors.
    3. Reconnect the PCM C2 harness connector.
    4. Back probe the (V37) S/C Switch Sense 1 circuit and the (V38) S/C Switch Sense 2 circuit at the

PCM C2 harness connector.

CAUTION: Use only approved back probe tools when back probing a connector so as not to cause damage to the terminals or insulation of the connector. Damage to the terminals can cause poor terminal contact or retention. Damage to the insulation can introduce corrosion due to water infiltration.

5. Turn the ignition on.
6. Using the scan tool, monitor the S/C Switch voltage readings.
7. Using a Voltmeter check the voltage on the (V71) S/C Switch Sense 1 circuit and the (V38) S/C Switch Sense 2 circuit at the PCM C2 harness connector.
8. Monitor the Voltmeter.
9. Using the scan tool, monitor the S/C Switch voltage readings.

SWITCH POSITION	SWITCH No. 1 VOLTAGE VALUE	SWITCH No. 2 VOLTAGE VALUE
NO SWITCHES PRESSED	4.31 to 4.78 Volts	4.31 to 4.78 Volts
ON/OFF PRESSED	0.59 to 1.13 Volts	3.53 to 3.92 Volts
RES/ACCEL PRESSED	3.88 to 4.17 Volts	2.04 to 2.47 Volts
SET/DECEL PRESSED	3.16 to 3.56 Volts	1.17 to 1.56 Volts
CANCEL PRESSED	1.59 to 1.99 Volts	2.84 to 3.25 Volts

10. Compare the voltage readings on the Voltmeter to what the scan tool displayed.

    Are the voltage readings out of the listed specification and is there less than a 0.2 Volt difference between the Voltmeter switch values and the scan tool switch values?

    Yes

    - Replace the Speed Control Switch in accordance with the service information.
    - Perform the POWERTRAIN VERIFICATION TEST. Refer to **POWERTRAIN VERIFICATION TEST - 6.7L** .

    No

    - Go To 11.

11. **POWERTRAIN CONTROL MODULE (PCM)**
    1. Using the wiring diagram/schematic as a guide, inspect the wiring and connectors between the Speed Control Switch and the Powertrain Control Module (PCM).
    2. Look for any chafed, pierced, pinched or partially broken wires.
    3. Look for broken, bent, pushed out or corroded terminals. Verify that there is good pin to terminal contact in the Switch and Powertrain Control Module connectors.

4. Perform any Technical Service Bulletins that may apply.

   Were there any problems found?

   Yes

   - Repair as necessary.
   - Perform the POWERTRAIN VERIFICATION TEST. Refer to **POWERTRAIN VERIFICATION TEST - 6.7L** .

   No

   - Replace and program the Powertrain Control Module in accordance with the service information. Refer to **MODULE, POWERTRAIN CONTROL, 6.7L DIESEL, REMOVAL** and **PCM/ECM / TCM PROGRAMMING** .
   - Perform the POWERTRAIN VERIFICATION TEST. Refer to **POWERTRAIN VERIFICATION TEST - 6.7L** .

P0592-SPEED CONTROL SWITCH 2 CIRCUIT LOW

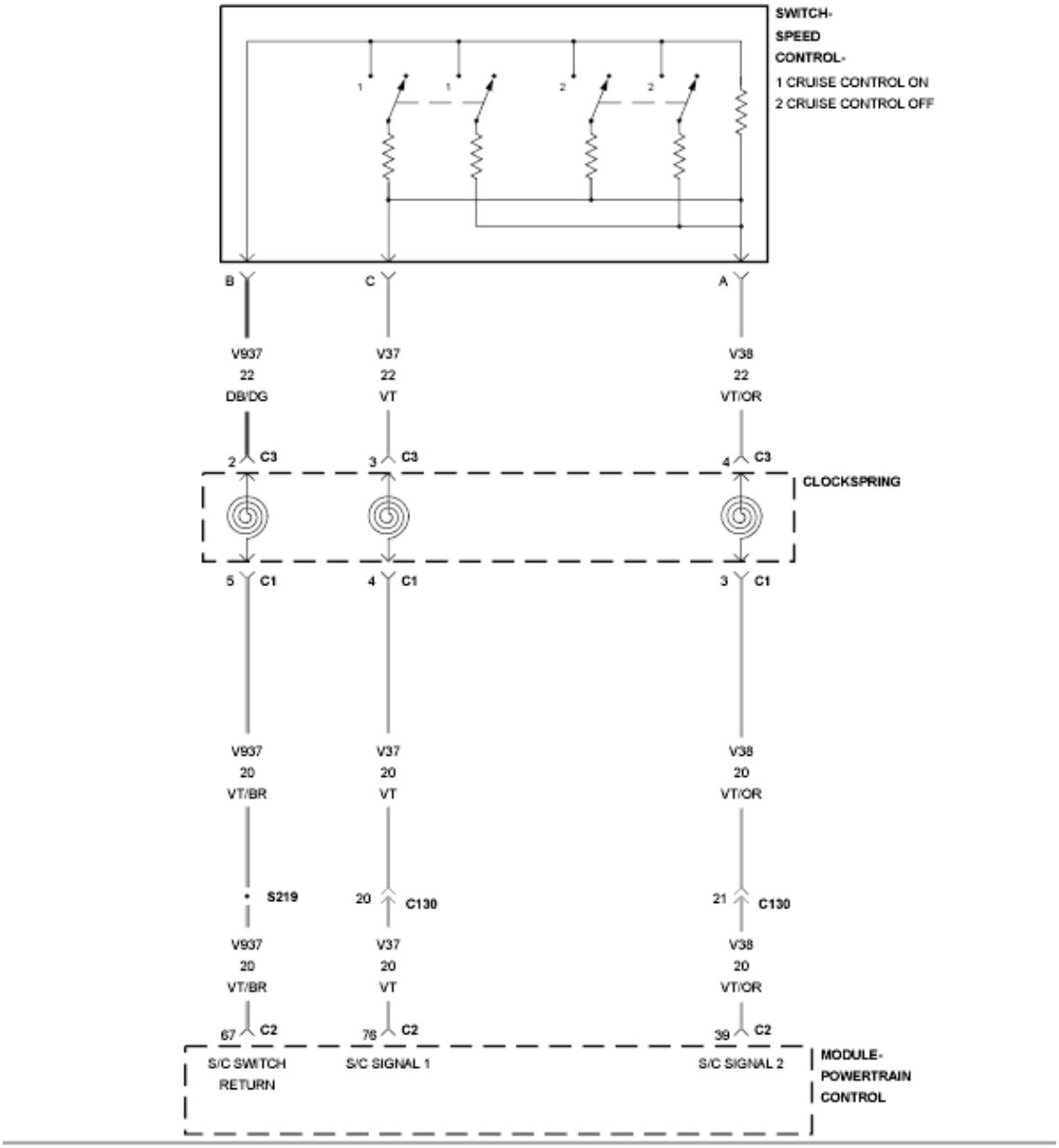

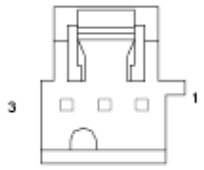

SWITCH-
SPEED
CONTROL

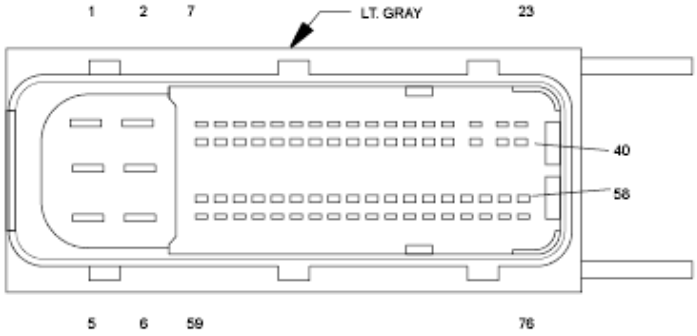

MODULE-
POWERTRAIN
CONTROL C2

Fig. 82: Speed Control Switch Circuit Schematic
Courtesy of CHRYSLER GROUP, LLC

For a complete wiring diagram, **refer to appropriate SYSTEM WIRING DIAGRAMS article** .

WHEN MONITORED:

While the ignition is on.

SET CONDITION:

Speed control MUX switch below 1.0 Volt for five seconds.

POSSIBLE CAUSES

Possible Causes
S/C WIRING HARNESS OBSERVABLE PROBLEM
S/C SWITCH (ON/OFF)
CLOCKSPRING
S/C SWITCH (RESUME/ACCEL)
(V38) S/C SWITCH 2 SIGNAL CIRCUIT SHORTED TO GROUND
(V38) S/C SWITCH 2 SIGNAL CIRCUIT SHORTED TO THE (V937) S/C SWITCH RETURN CIRCUIT
POWERTRAIN CONTROL MODULE (PCM)

Always perform the Pre-Diagnostic Troubleshooting procedure before proceeding. Refer to PRE-DIAGNOSTIC TROUBLESHOOTING PROCEDURE - 6.7L .

DIAGNOSTIC TEST

1. **S/C SWITCH VOLTAGE BELOW 1.0 VOLT**
    1. Turn the ignition on.
    2. With the scan tool, read the S/C Switch Volts status in the PCM.

       Is the S/C Switch voltage below 1.0 Volt?

       Yes

       - Go To 3.

       No

       - Go To 2.
2. **VISUALLY INSPECT THE S/C WIRING HARNESS**
    1. Turn the ignition off.

2. Using the Schematics as a guide, inspect the Wiring and Connectors.

   Were any problems found?

   Yes

   - Repair as necessary.
   - Perform the POWERTRAIN VERIFICATION TEST - 6.7L. Refer to **POWERTRAIN VERIFICATION TEST - 6.7L** .

   No

   - Go To 3.

3. **S/C SWITCH (ON/OFF)**
   1. Turn the ignition off.
   2. Disconnect the S/C ON/OFF Switch harness connector.

      NOTE: Check connectors - Clean/repair as necessary.

   3. Turn the ignition on.
   4. With the scan tool in Sensors, read the S/C Switch Volts in the PCM.

      Did the S/C Switch voltage change to 5.0 Volts?

      Yes

      - Replace the S/C ON/OFF Switch in accordance with the service information.
      - Perform the POWERTRAIN VERIFICATION TEST - 6.7L. Refer to **POWERTRAIN VERIFICATION TEST - 6.7L** .

      No

      - Go To 4.

4. **S/C SWITCH (RESUME/ACCEL)**
   1. Turn the ignition off.
   2. Disconnect the S/C RESUME/ACCEL Switch harness connector.

      NOTE: Check connectors - Clean/repair as necessary.

   3. Ignition on, engine not running.
   4. With the scan tool in Sensors, read the S/C Switch Volts in the PCM.

      Did the S/C Switch voltage go above 4.0 Volts?

Yes

- Replace the Resume/Accel Switch in accordance with the service information.
- Perform the POWERTRAIN VERIFICATION TEST - 6.7L. Refer to **POWERTRAIN VERIFICATION TEST - 6.7L** .

No

- Go To 5.

5. **CLOCKSPRING**
   1. Turn the ignition off.
   2. Disconnect the Clockspring C1 harness connector (instrument panel wiring side).
   3. Turn the ignition on.
   4. With the scan tool in sensors, read the S/C Switch Volts in the PCM.

      Did the S/C Switch voltage change to 5.0 Volts?

      Yes

      - Replace the Clockspring in accordance with the service information.
      - Perform the POWERTRAIN VERIFICATION TEST - 6.7L. Refer to **POWERTRAIN VERIFICATION TEST - 6.7L** .

      No

      - Go To 6.

6. **CHECK THE (V38) S/C SWITCH 2 SIGNAL CIRCUIT FOR A SHORT TO GROUND**
   1. Turn the ignition off.
   2. Disconnect the S/C ON/OFF Switch harness connector.
   3. Disconnect the PCM C2 harness connector.

      NOTE: Check connectors - Clean/repair as necessary.

   4. Measure the resistance between ground and the (V38) S/C Switch 2 Signal circuit at S/C ON/OFF Switch harness connector.

      Is the resistance below 5.0 Ohms?

      Yes

      - Repair (V38) S/C Switch 2 Signal circuit for a short to ground.
      - Perform the POWERTRAIN VERIFICATION TEST - 6.7L. Refer to **POWERTRAIN VERIFICATION TEST - 6.7L** .

No

- Go To 7.

7. **CHECK FOR THE (V38) S/C SWITCH 2 SIGNAL CIRCUIT SHORTED TO THE (V937) S/C SWITCH RETURN CIRCUIT**
   1. Measure the resistance between the (V38) S/C Switch 2 Signal circuit and the (V937) S/C Switch Return circuit at the ON/OFF switch harness connector.

      Is the resistance below 5.0 Ohms?

      Yes

      - Repair the short between the (V38) S/C Switch 2 Signal circuit and the (V937) S/C Switch Return circuit.
      - Perform the POWERTRAIN VERIFICATION TEST - 6.7L. Refer to **POWERTRAIN VERIFICATION TEST - 6.7L** .

      No

      - Replace and program the Powertrain Control Module in accordance with the service information. Refer to **MODULE, POWERTRAIN CONTROL, 6.7L DIESEL, REMOVAL** and **PCM/ECM / TCM PROGRAMMING** .
      - Perform the POWERTRAIN VERIFICATION TEST - 6.7L. Refer to **POWERTRAIN VERIFICATION TEST - 6.7L** .

P0593-SPEED CONTROL SWITCH 2 CIRCUIT HIGH

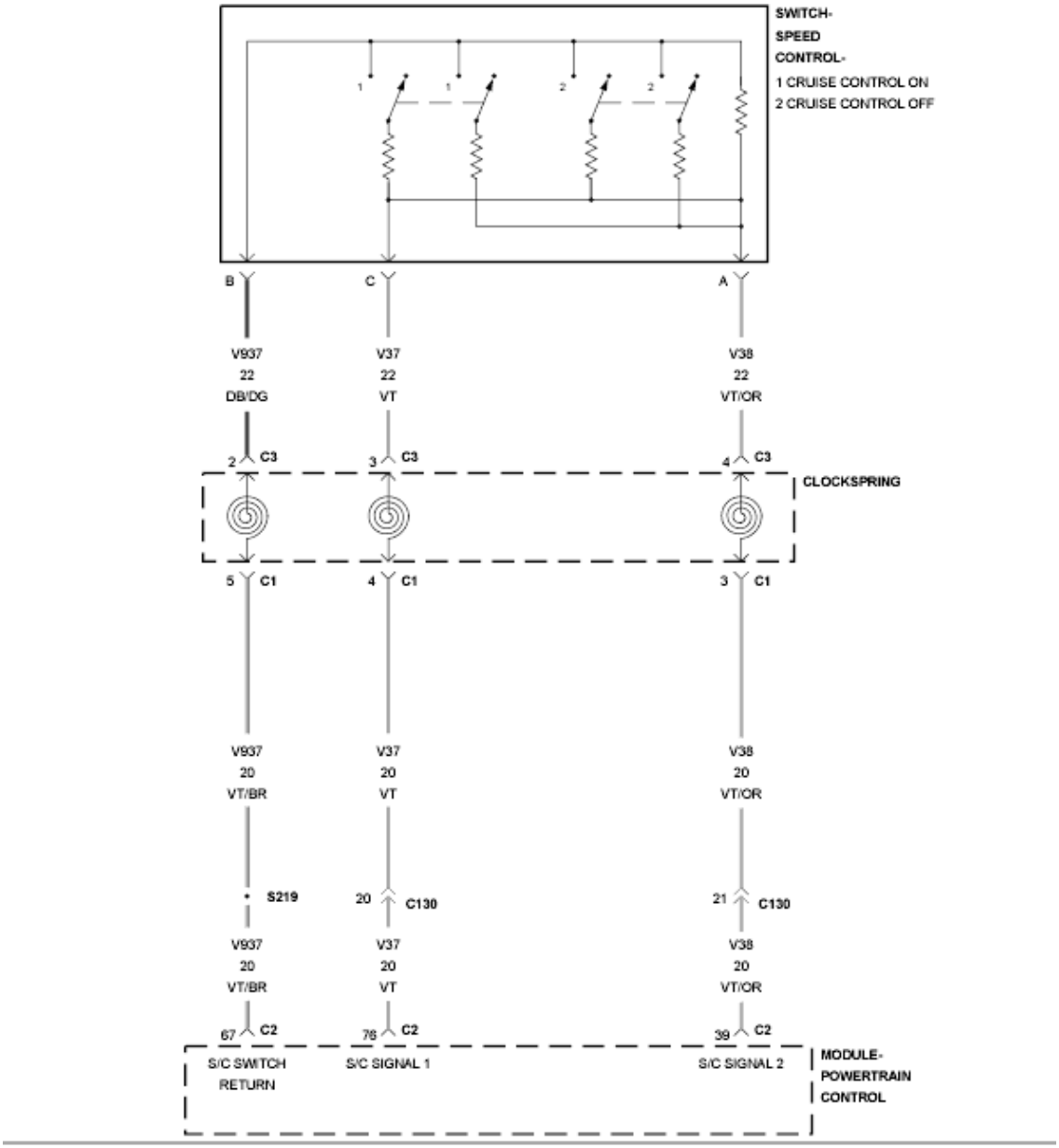

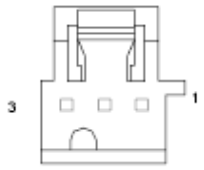

SWITCH-
SPEED
CONTROL

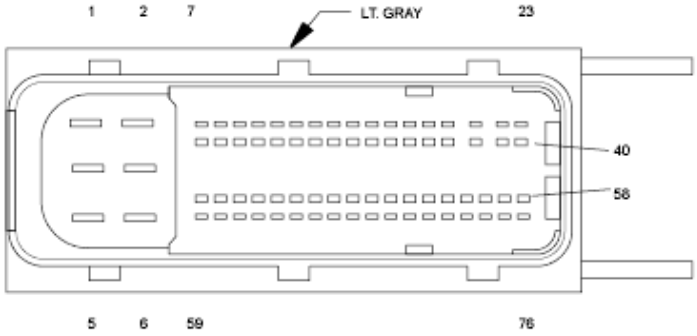

MODULE-
POWERTRAIN
CONTROL C2

Fig. 83: Speed Control Switch Circuit Schematic
Courtesy of CHRYSLER GROUP, LLC

For a complete wiring diagram, **refer to appropriate SYSTEM WIRING DIAGRAMS article** .

WHEN MONITORED:

Key on or engine running.

SET CONDITION:

Speed Control MUX switch above 11.5 Volts for five seconds.

POSSIBLE CAUSES

Possible Causes
S/C WIRING HARNESS OBSERVABLE PROBLEM
CLOCKSPRING
SPEED CONTROL ON/OFF SWITCH
(V38) S/C SWITCH 2 SIGNAL CIRCUIT SHORTED TO VOLTAGE
(V38) S/C SWITCH 2 SIGNAL CIRCUIT OPEN PCM TO CLOCK SPRING
(V38) S/C SWITCH 2 SIGNAL CIRCUIT OPEN CLOCKSPRING TO S/C SWITCH
(V937) S/C SWITCH RETURN CIRCUIT OPEN CLOCKSPRING TO S/C SWITCH
(V937) S/C SWITCH RETURN CIRCUIT OPEN PCM TO CLOCKSPRING
POWERTRAIN CONTROL MODULE (PCM)

Always perform the Pre-Diagnostic Troubleshooting procedure before proceeding. Refer to PRE-DIAGNOSTIC TROUBLESHOOTING PROCEDURE - 6.7L .

DIAGNOSTIC TEST

1. **SCAN TOOL SHOWS SPEED CONTROL SWITCH ON/OFF**
    1. Turn the ignition on.
    2. With the scan tool in Inputs/Outputs, read the Speed Control inputs state in PCM.
    3. While monitoring the scan tool, push the Speed Control On/Off Switch several times, then leave it on.

    Did the scan tool show Speed Control Switch off and on?

    Yes

    - Perform the INTERMITTENT CONDITION diagnostic procedure. Refer to **INTERMITTENT CONDITION - 6.7L** .

    No

- Go To 2.

2. **S/C WIRING HARNESS VISUAL INSPECTION**
    1. Turn the ignition off.
    2. Using the Schematics as a guide, inspect the Wiring and Connectors.

    Were any problems found?

    Yes

    - Repair as necessary.
    - Perform the POWERTRAIN VERIFICATION TEST - 6.7L. Refer to **POWERTRAIN VERIFICATION TEST - 6.7L** .

    No

    - Go To 3.

3. **CHECK THE CLOCKSPRING**

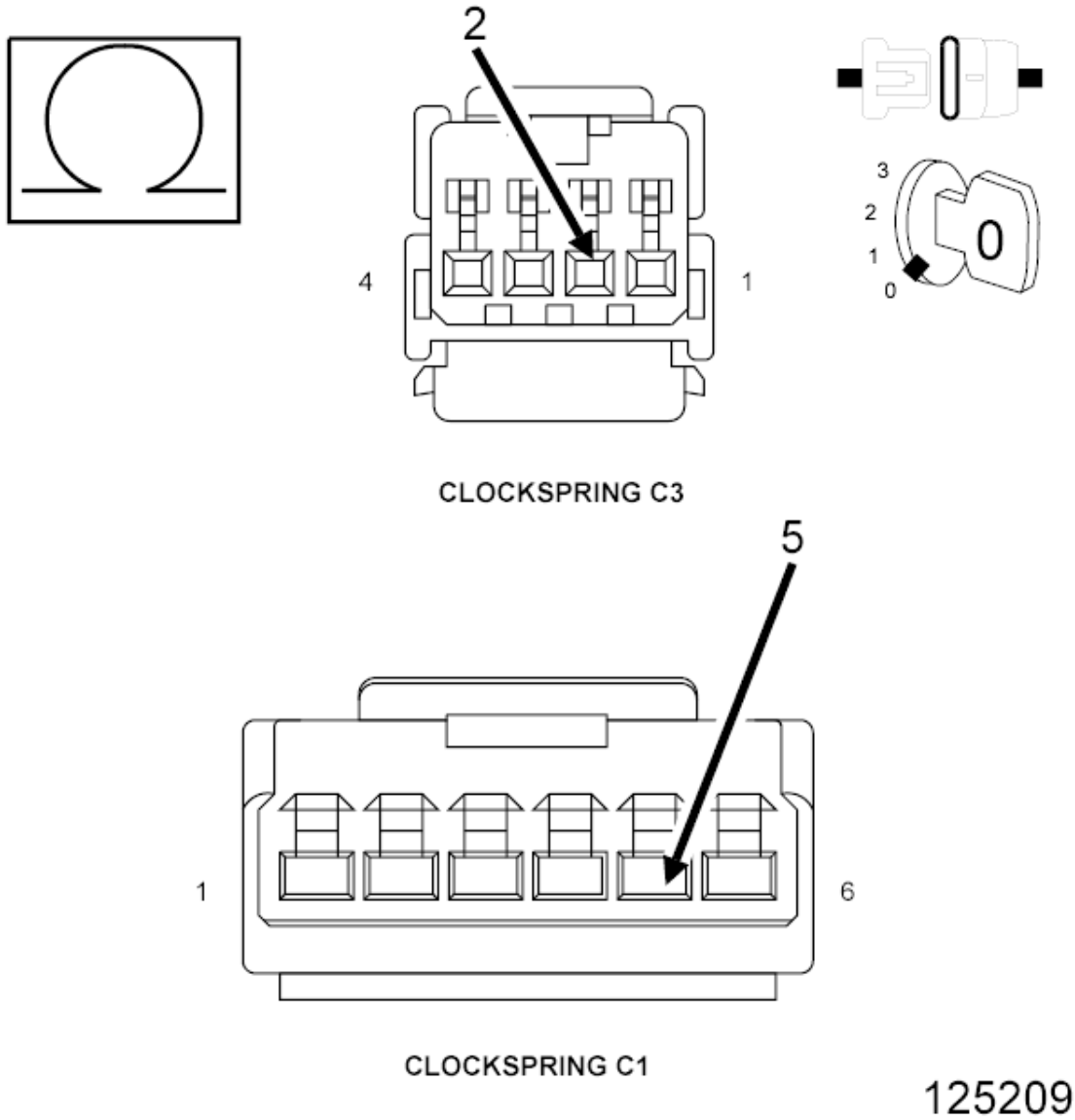

Fig. 84: Measuring Resistance Of S/C Switch Return Circuit Between Upper And Lower Clockspring Harness Connectors
Courtesy of CHRYSLER GROUP, LLC

1. Disconnect the Clockspring C1 and C3 harness connectors.

   NOTE: Check connectors - Clean/repair as necessary.

2. Measure the resistance of the (V937) S/C Switch Return circuit between the Clockspring C1 and C3 harness connectors.

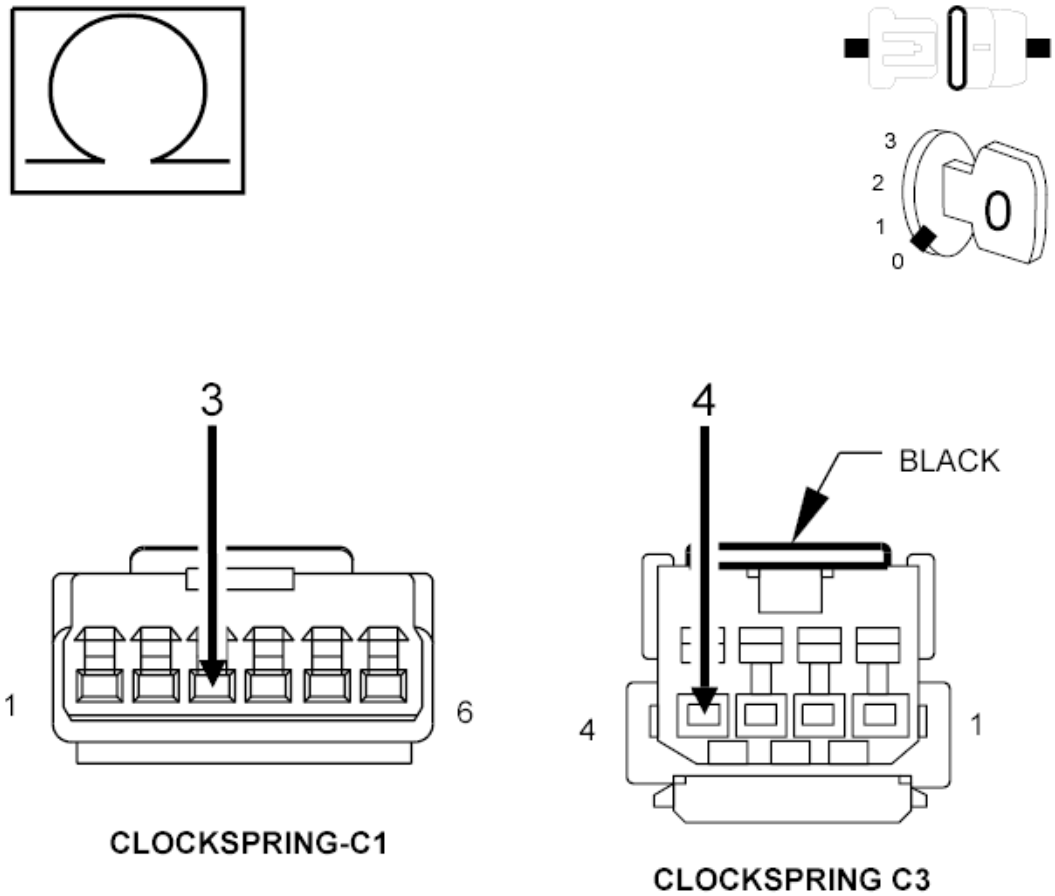

Fig. 85: Measuring Resistance Of S/C Switch Signal Circuits Between Clockspring Harness Connectors
Courtesy of CHRYSLER GROUP, LLC

3. Measure the resistance of the (V38) S/C Switch 2 Signal circuit between the Clockspring C1 and C3 harness connectors.

   Was the resistance above 5.0 Ohms for either circuit?

   Yes

   - Replace the Steering Column Control Module in accordance with the service information.
   - Perform the POWERTRAIN VERIFICATION TEST - 6.7L. Refer to **POWERTRAIN VERIFICATION TEST - 6.7L** .

   No

   - Go To 4.

4. **SPEED CONTROL ON/OFF SWITCH**

1. Disconnect the Speed Control On/Off Switch harness connector only.

NOTE: Check connectors - Clean/repair as necessary.

2. Measure the resistance across the S/C On/Off Switch.

   Is the resistance between 20.3K and 20.7K Ohms?

   Yes

   - Go To 5.

   No

   - Replace the On/Off Switch in accordance with the service information.
   - Perform the POWERTRAIN VERIFICATION TEST - 6.7L. Refer to **POWERTRAIN VERIFICATION TEST - 6.7L** .

5. **CHECK THE (V38) S/C SWITCH 2 SIGNAL CIRCUIT FOR A SHORT TO VOLTAGE**
   1. Turn the ignition on.
   2. Measure the voltage of the (V38) S/C Switch 2 Signal circuit at both S/C Switch harness connectors.

      Is the voltage above 6.0 Volts?

      Yes

      - Repair the (V38) S/C Switch 2 Signal circuit for a short to voltage.
      - Perform the POWERTRAIN VERIFICATION TEST - 6.7L. Refer to **POWERTRAIN VERIFICATION TEST - 6.7L** .

      No

      - Go To 6.

6. **CHECK THE (V38) S/C SWITCH 2 SIGNAL CIRCUIT FOR AN OPEN BETWEEN THE PCM AND CLOCKSPRING**
   1. Turn the ignition off.
   2. Disconnect the PCM harness connector.

      NOTE: Check connectors - Clean/repair as necessary.

   3. Measure the resistance of the (V38) S/C Switch Signal 2 circuit between the PCM connector and the Clockspring C1 harness connector.

      Is the resistance below 5.0 Ohms?

Yes

- Go To 7.

No

- Repair the (V38) S/C Switch 2 Signal circuit for an open between the PCM and the Clockspring.
- Perform the POWERTRAIN VERIFICATION TEST - 6.7L. Refer to **POWERTRAIN VERIFICATION TEST - 6.7L** .

7. **CHECK THE (V38) S/C SWITCH 2 SIGNAL CIRCUIT FOR AN OPEN BETWEEN THE CLOCKSPRING AND S/C SWITCH**
   1. Measure the resistance of the (V38) S/C Switch 2 Signal circuit from the Clockspring C3 harness connector to the S/C Switch harness connectors.

      Is the resistance below 5.0 Ohms?

      Yes

      - Go To 8.

      No

      - Repair the (V38) S/C Switch 2 Signal circuit for an open between the Clockspring and the S/C switches.
      - Perform the POWERTRAIN VERIFICATION TEST - 6.7L. Refer to **POWERTRAIN VERIFICATION TEST - 6.7L** .
8. **CHECK THE (V937) S/C SWITCH RETURN CIRCUIT FOR AN OPEN BETWEEN THE CLOCKSPRING AND S/C SWITCHES**
   1. Measure the resistance of the (V937) S/C Switch Return circuit between the S/C harness connectors to the Clockspring C3 harness connector.

      Is the resistance below 5.0 Ohms?

      Yes

      - Go To 9.

      No

      - Repair the (V937) S/C Switch Return circuit for an open between the Clockspring and the S/C switches.
      - Perform the POWERTRAIN VERIFICATION TEST - 6.7L. Refer to **POWERTRAIN VERIFICATION TEST - 6.7L** .
9. **CHECK THE (V937) S/C SWITCH RETURN CIRCUIT FOR AN OPEN BETWEEN THE PCM**

AND CLOCKSPRING

1. Measure the resistance of the (V38) S/C Switch Return circuit between the PCM harness connector and the Clockspring C1 harness connector.

   Is the resistance below 5.0 Ohms?

   Yes

   - Replace and program the Powertrain Control Module in accordance with the service information. Refer to **MODULE, POWERTRAIN CONTROL, 6.7L DIESEL, REMOVAL** and **PCM/ECM / TCM PROGRAMMING** .
   - Perform the POWERTRAIN VERIFICATION TEST - 6.7L. Refer to **POWERTRAIN VERIFICATION TEST - 6.7L** .

   No

   - Repair the (V937) S/C Switch Return circuit for an open between the PCM and Clockspring.
   - Perform the POWERTRAIN VERIFICATION TEST - 6.7L. Refer to **POWERTRAIN VERIFICATION TEST - 6.7L** .

P0601-INTERNAL MEMORY CHECKSUM ERROR

For a complete wiring diagram, **refer to appropriate SYSTEM WIRING DIAGRAMS article** .

WHEN MONITORED:

While the ignition is on.

SET CONDITION:

A deviation between the Powertrain Control Module memory and a stored calibration.

POSSIBLE CAUSES

Possible Causes
FLASH PCM POWERTRAIN CONTROL MODULE (PCM)

Always perform the Pre-Diagnostic Troubleshooting procedure before proceeding. Refer to PRE-DIAGNOSTIC TROUBLESHOOTING PROCEDURE - 6.7L .

DIAGNOSTIC TEST

1. **FLASH PCM**
   1. Using the scan tool, reflash the PCM with the proper calibration for the particular truck.

Is the flash successful?

Yes

- Repair complete.

No

- Go To 2.

2. **POWERTRAIN CONTROL MODULE**
    1. With the scan tool, read DTCs.

    Did P0601 set after the reflash?

    Yes

    - Replace the Powertrain Control Module in accordance with the service information.
    - Perform the POWERTRAIN VERIFICATION TEST - 6.7L. Refer to **POWERTRAIN VERIFICATION TEST - 6.7L** .

    No

    - Test Complete.
    - Perform the POWERTRAIN VERIFICATION TEST - 6.7L. Refer to **POWERTRAIN VERIFICATION TEST - 6.7L** .

P0604-INTERNAL CONTROL MODULE RAM ERROR

For a complete wiring diagram, **refer to appropriate SYSTEM WIRING DIAGRAMS article** .

WHEN MONITORED:

While the key is on.

SET CONDITION:

Internal Powertrain Control Module software error.

POSSIBLE CAUSES

Possible Causes
REFLASH PCM POWERTRAIN CONTROL MODULE

Always perform the Pre-Diagnostic Troubleshooting procedure before proceeding. Refer to PRE-DIAGNOSTIC TROUBLESHOOTING PROCEDURE - 6.7L .

DIAGNOSTIC TEST

1. **REFLASH PCM**
    1. Using the scan tool, reflash the module with latest calibration.

       Was the flash successful?

       Yes

       - Go To 2.

       No

       - Replace the Powertrain Control Module in accordance with the service information.
       - Perform the POWERTRAIN VERIFICATION TEST - 6.7L. Refer to **POWERTRAIN VERIFICATION TEST - 6.7L** .
2. **POWERTRAIN CONTROL MODULE**
    1. Run the engine for one minute and shut off.
    2. With the scan tool, read DTCs.

       Did P0604 set?

       Yes

       - Replace the Powertrain Control Module in accordance with the service information.
       - Perform the POWERTRAIN VERIFICATION TEST - 6.7L. Refer to **POWERTRAIN VERIFICATION TEST - 6.7L** .

       No

       - Test Complete.

P0606-INTERNAL CONTROL PROCESSOR

THEORY OF OPERATION

This fault code is triggered when the internal Powertrain Control Module (PCM) diagnostics detect a read or write error internal to the module. The PCM illuminates the MIL light immediately when the diagnostic runs and fails. The PCM will turn off the MIL light immediately after the diagnostic runs and passes. This fault code can only be caused by an internal PCM problem and may prevent the engine from starting.

WHEN MONITORED:

With ignition on.

SET CONDITION:

Powertrain Control Module has detected internal failures.

POSSIBLE CAUSES

Possible Causes
ENGINE OR FUEL MODIFICATIONS THAT EXCEED OEM SPECIFICATIONS
POWERTRAIN CONTROL MODULE (PCM)

Always perform the Pre-Diagnostic Troubleshooting procedure before proceeding. Refer to PRE-DIAGNOSTIC TROUBLESHOOTING PROCEDURE - 6.7L .

DIAGNOSTIC TEST

1. **POWERTRAIN CONTROL MODULE**
    1. Turn the ignition off.
    2. Verify all chassis grounds are properly connected. Perform the CHECKING ECM POWERS AND GROUNDS diagnostic procedure. Refer to **DIAGNOSIS AND TESTING, 6.7L** .
    3. Turn ignition on, engine not running.
    4. With the scan tool, read DTCs.

    Is P0606 stored?

    Yes

    - Repair complete.

    No

    - Replace and program the Powertrain Control Module in accordance with the service information. Refer to **MODULE, POWERTRAIN CONTROL, 6.7L DIESEL, REMOVAL** and **PCM/ECM / TCM PROGRAMMING** .

P0607-ECU INTERNAL PERFORMANCE

For a complete wiring diagram, **refer to appropriate SYSTEM WIRING DIAGRAMS article** .

THEORY OF OPERATION

The purpose of this test is to check the internal Powertrain Control Module (PCM) fuel system diagnostic (ASIC) for proper operation by intentionally inducing a failure and looking for the proper PCM response. At key off, the diagnostic overwrites injector on time and falsely cycles the injectors. If the internal PCM detection chip (ASIC) detects the firing and sets an error then the diagnostic passes. This diagnostic initially only runs at key off. If the diagnostic failed at the last key off cycle, then it will also run at the next cranking event. If the driver stalls the engine (manual transmission only) at the same moment that the key is turned off this diagnostic could fail. When the diagnostic fails, the PCM will flash the ETC lamp.

WHEN MONITORED:

Initially at key off. If the diagnostic fails at last key off then it will also run at the next cranking event.

SET CONDITION:

Induced failure does not set the internal Powertrain Control Module (PCM) detection chip (ASIC) error.

POSSIBLE CAUSES

Possible Causes
FUEL INJECTOR CIRCUIT OPEN/HIGH RESISTANCE
UPRATE KIT THAT MODIFIES INJECTOR ON TIME
POWERTRAIN CONTROL MODULE (PCM)

Always perform the Pre-Diagnostic Troubleshooting procedure before proceeding. Refer to PRE-DIAGNOSTIC TROUBLESHOOTING PROCEDURE - 6.7L .

DIAGNOSTIC TEST

1. **ACTIVE DTC**

   NOTE: **High resistance, opens, or shorts in any fuel injector circuits will cause this DTC to set, but may not set a Fuel Injector circuit DTC. Always check Fuel Injector circuits before replacing the Powertrain Control Module. Pay special attention to the valve cover gasket molded in injector harness.**

   1. Ignition on, engine not running.
   2. With the scan tool check for active DTCs.

      Is the DTC active?

      Yes

      - Go To 2.

      No

      - Perform the INTERMITTENT CONDITION diagnostic procedure. Refer to **INTERMITTENT CONDITION - 6.7L** .
2. **FUEL INJECTOR CIRCUIT DTCS**
   1. Ignition on, engine not running.
   2. With the scan tool, read DTCs.

      Are there any Fuel Injector circuit DTCs present?

Yes

- Repair the Fuel Injector circuit DTCs before proceeding.
- Perform the POWERTRAIN VERIFICATION TEST - 6.7L. Refer to **POWERTRAIN VERIFICATION TEST - 6.7L** .

No

- Go To 3.

3. **INTERMITTENT CONDITION**
   1. Ask customer if the truck was stalled at key off shortly before the ETC lamp started flashing.

      Was the truck stalled at a recent key off event?

      Yes

      - Explain diagnostic to customer. Repair complete.

      No

      - Go To 4.

4. **POWERTRAIN CONTROL MODULE**

   NOTE: High resistance, opens or shorts in any fuel injector circuits will cause this DTC to set, but may not set a Fuel Injector circuit DTC. Always check Fuel Injector circuit wiring before replacing the Powertrain Control Module. Pay special attention to the valve cover gasket molded in injector harness.

   1. Investigate truck for signs of a performance enhancement kit.

      Are there signs that the customer has used a performance enhancement kit?

      Yes

      - Repair complete. Return vehicle to owner.

      No

      - Replace the Powertrain Control Module in accordance with the service information.
      - Perform the POWERTRAIN VERIFICATION TEST - 6.7L. Refer to **POWERTRAIN VERIFICATION TEST - 6.7L** .

P061A-ETC LEVEL 2 TORQUE PERFORMANCE

For a complete wiring diagram, **refer to appropriate SYSTEM WIRING DIAGRAMS article** .

THEORY OF OPERATION

This algorithm monitors the control system to ensure that the fueling output is consistent based on the operating conditions. The Engine Control Module (PCM) will light the ETC lamp immediately after the diagnostic runs and fails. During this time the customer may experience an engine derate or engine running rough. The PCM will turn off the ETC lamp once the diagnostic passes in one drive cycle.

WHEN MONITORED:

With the engine running.

SET CONDITION:

Varies with operation. Verifies the control system fueling output is consistent based on the operating conditions.

POSSIBLE CAUSES

Possible Causes
SOFTWARE REVISION/TSBS
COOLANT TEMPERATURE SENSOR
EXHAUST MANIFOLD PRESSURE SENSOR
INTAKE MANIFOLD PRESSURE SENSOR
BRAKE SWITCH
ENGINE OR FUEL MODIFICATIONS THAT EXCEED OEM SPECIFICATIONS
ACCELERATOR PEDAL POSITION SENSOR
POWERTRAIN CONTROL MODULE (PCM)

Always perform the Pre-Diagnostic Troubleshooting procedure before proceeding. Refer to PRE-DIAGNOSTIC TROUBLESHOOTING PROCEDURE - 6.7L .

DIAGNOSTIC TEST

1. **OTHER DTCS**
    1. Ignition on, engine not running.
    2. With the scan tool, read DTCs.

    Are there any other DTCs?

    Yes

    - Repair all other DTCs first.
    - Perform the POWERTRAIN VERIFICATION TEST - 6.7L. Refer to **POWERTRAIN VERIFICATION TEST - 6.7L** .

    No

- Go To 2.

2. **CHECK THE COOLANT TEMPERATURE SENSOR**
    1. With the scan tool, read the Freeze frame data.

       Is the coolant temperature reading uncharacteristically low for the operating conditions?

       Yes

       - Replace Coolant Temperature Sensor in accordance with the service information.
       - Perform the POWERTRAIN VERIFICATION TEST - 6.7L. Refer to **POWERTRAIN VERIFICATION TEST - 6.7L** .

       No

       - Go To 3.

3. **CHECK THE ACCELERATOR PEDAL POSITION SENSOR**
    1. Monitor the APPS 1 and APPS 2 voltage with scan tool while depressing the throttle pedal.

       Is the voltage transition shown on the scan tool smooth while depressing the throttle and is the Volt swing smooth?

       Yes

       - Go To 4.

       No

       - Replace the APPS in accordance with the service information.
       - Perform the POWERTRAIN VERIFICATION TEST - 6.7L. Refer to **POWERTRAIN VERIFICATION TEST - 6.7L** .

4. **CHECK THE EXHAUST GAS PRESSURE SENSOR**
    1. With the scan tool, read the Freeze frame data.

       Is the Exhaust Gas Pressure Sensor reading higher than the Boost Pressure reading?

       Yes

       - Replace the Exhaust Gas Pressure Sensor in accordance with the service information.
       - Perform the POWERTRAIN VERIFICATION TEST - 6.7L. Refer to **POWERTRAIN VERIFICATION TEST - 6.7L** .

       No

       - Go To 5.

5. **CHECK THE INTAKE MANIFOLD PRESSURE SENSOR**
    1. With the scan tool, read the Freeze frame data.

       Is the Boost Pressure Sensor reading higher than the Exhaust Gas Pressure Sensor reading?

       Yes

       - Replace the Boost Pressure Sensor in accordance with the service information.
       - Perform the POWERTRAIN VERIFICATION TEST - 6.7L. Refer to **POWERTRAIN VERIFICATION TEST - 6.7L** .

       No

       - Go To 6.
6. **CHECK THE BRAKE SWITCH**
    1. Using a scan tool monitor brake switch position while cycling the brake pedal.

       Is the brake switch status changing correctly?

       Yes

       - Go To 7.

       No

       - Replace the Brake Switch or repair the wiring.
       - Perform the POWERTRAIN VERIFICATION TEST - 6.7L. Refer to **POWERTRAIN VERIFICATION TEST - 6.7L** .
7. **CHECK FOR SOFTWARE REVISION/TSBS**
    1. Check TSBs for software releases.

       Are there any new software releases?

       Yes

       - Reflash the Powertrain Control Module in accordance with the service information.
       - Perform the POWERTRAIN VERIFICATION TEST - 6.7L. Refer to **POWERTRAIN VERIFICATION TEST - 6.7L** .

       No

       - Go To 8.
8. **CHECK FOR ENGINE OR FUEL MODIFICATIONS THAT EXCEED OEM SPECIFICATIONS**
    1. An Engine or Fuel modification that exceeds OEM specifications can affect the parameters that this

diagnostic monitors.

2. Any device/software that modifies the values reported by any of the Cummins actuators/sensors could fail this diagnostic.
3. Any device that puts a high parasitic load on the engine could also cause this diagnostic to fail.

Is there evidence of Engine or Fuel modifications that exceed OEM specifications?

Yes

- Return vehicle to customer.

No

- Replace Powertrain Control Module in accordance with the Service Information.
- Perform the POWERTRAIN VERIFICATION TEST - 6.7L. Refer to **POWERTRAIN VERIFICATION TEST - 6.7L** .

P061C-ETC LEVEL 2 RPM PERFORMANCE

For a complete wiring diagram, **refer to appropriate SYSTEM WIRING DIAGRAMS article** .

THEORY OF OPERATION

This diagnostic is testing for an internal Powertrain Control Module (PCM) failure. The PCM redundantly calculates engine speed based crankcase speed sensor. This calculation is done in a different part of the PCM than the primary calculation. It detects if the primary engine speed calculation is lower than the redundant calculation by more than a calibrated amount 675 RPM for a calibrated amount of time two sec. The PCM will light the ETC lamp when the diagnostic runs and fails. The light will remain on for the drive cycle or until both calculations agree for two seconds.

WHEN MONITORED:

Engine speed is detected.

SET CONDITION:

The primary engine speed calculation differs from the redundant engine speed calculation (internal calculation) by a calibrated amount for a calibrated amount of time.

POSSIBLE CAUSES

Possible Causes
OTHER CRANK POSITION SENSOR RELATED DTCS
POWERTRAIN CONTROL MODULE (PCM)

Always perform the Pre-Diagnostic Troubleshooting procedure before proceeding. Refer to PRE-

DIAGNOSTIC TROUBLESHOOTING PROCEDURE - 6.7L .

DIAGNOSTIC TEST

1. **OTHER DTCS**
    1. Ignition on, engine not running.
    2. With the scan tool, read DTCs.

    Are the other DTCs?

    Yes

    - Repair other DTCs first.

    No

    - Go To 2.
2. **CRANK POSITION SENSOR**
    1. Replace the Crank Position Sensor in accordance with the service information.
    2. Ignition on, engine not running.
    3. With the scan tool, erase DTCs.
    4. Test drive the vehicle.
    5. With the scan tool, read DTCs.

    Did the DTC reset?

    Yes

    - Replace the Powertrain Control Module in accordance with the service information.
    - Perform the POWERTRAIN VERIFICATION TEST - 6.7L. Refer to **POWERTRAIN VERIFICATION TEST - 6.7L** .

    No

    - Repair is complete.
    - Perform the POWERTRAIN VERIFICATION TEST - 6.7L. Refer to **POWERTRAIN VERIFICATION TEST - 6.7L** .

P0625-GENERATOR FIELD CONTROL CIRCUIT LOW

For a complete wiring diagram, **refer to appropriate SYSTEM WIRING DIAGRAMS article** .

THEORY OF OPERATION

There are two communication lines between the Powertrain Control Module (PCM) and Generator. Based on

sensed battery voltage, the PCM commands the Generator to charge the batteries to a desired voltage. The max voltage the PCM will command the alternator to charge is 14.75 Volts. The PCM then receives feedback from the Generator on the voltage level it is charging the batteries through a sense line. The PCM will not light a MIL lamp for this fault.

WHEN MONITORED:

When the ignition is on.

SET CONDITION:

The PCM detects that the (K20) Generator Field Control circuit is shorted to ground.

POSSIBLE CAUSES

Possible Causes
(K20) GENERATOR FIELD CONTROL CIRCUIT SHORTED TO GROUND GENERATOR
POWERTRAIN CONTROL MODULE (PCM)

Always perform the Pre-Diagnostic Troubleshooting procedure before proceeding. Refer to PRE-DIAGNOSTIC TROUBLESHOOTING PROCEDURE - 6.7L .

DIAGNOSTIC TEST

1. **ACTIVE DTC**
    1. Turn the ignition on.
    2. With the scan tool, erase DTCs.
    3. Turn the ignition off for 75 seconds.
    4. Start the engine and let idle for up to five minutes.
    5. With the scan tool, read DTCs.

    Did the DTC reset?

    Yes

    - Go To

    No

    - Perform the INTERMITTENT CONDITION diagnostic procedure. Refer to **INTERMITTENT CONDITION - 6.7L** .
2. **CHECK THE (K20) GENERATOR FIELD CONTROL CIRCUIT FOR A SHORT TO GROUND**
    1. Turn the ignition off.
    2. Disconnect the Generator field harness connector.

3. Disconnect the PCM C1 harness connector.
4. Measure the resistance between ground and the (K20) Generator Field Control circuit at the Generator harness connector.

   Is the resistance below 10k Ohms.

   No

   - Go To

   Yes

   - Repair the (K20) Generator Field Control circuit for a short to ground.
   - Perform the POWERTRAIN VERIFICATION TEST - 6.7L. Refer to **POWERTRAIN VERIFICATION TEST - 6.7L** .

3. **CHECK THE GENERATOR**
   1. Reconnect the PCM C1 harness connector.
   2. Connect a jumper between the Generator output stud and the (K20) Generator Field Control circuit at the Generator field harness connector.
   3. Turn the ignition on.
   4. With the scan tool, read DTCs.

      Did DTC P0625 become stored and P0626 become active or pending?

      Yes

      - Replace the Generator in accordance with the service information.
      - Perform he POWERTRAIN VERIFICATION TEST - 6.7L. Refer to .

      No

      - Replace the Powertrain Control Module in accordance with the service information.
      - Perform the POWERTRAIN VERIFICATION TEST - 6.7L. Refer to **POWERTRAIN VERIFICATION TEST - 6.7L** .

P0626-GENERATOR FIELD CONTROL CIRCUIT HIGH

For a complete wiring diagram, **refer to appropriate SYSTEM WIRING DIAGRAMS article** .

THEORY OF OPERATION

There are two communication lines between the Powertrain Control Module (PCM) and Generator. Based on sensed battery voltage, the PCM commands the Generator to charge the batteries to a desired voltage. The max voltage the PCM will command the Generator to charge is 14.75 Volts. The PCM then receives feedback from the alternator on the voltage level it is charging the batteries through a sense line. The PCM will not light a MIL

lamp for this fault.

WHEN MONITORED:

When the engine is running.

SET CONDITION:

The PCM detects that the (K20) Generator Field Control circuit is open or shorted to voltage.

POSSIBLE CAUSES

Possible Causes
(K20) GENERATOR FIELD CONTROL CIRCUIT SHORTED TO VOLTAGE (K20) GENERATOR FIELD CONTROL CIRCUIT OPEN/HIGH RESISTANCE
GENERATOR
POWERTRAIN CONTROL MODULE (PCM)

Always perform the Pre-Diagnostic Troubleshooting procedure before proceeding. Refer to PRE-DIAGNOSTIC TROUBLESHOOTING PROCEDURE - 6.7L .

DIAGNOSTIC TEST

1. **ACTIVE DTC**
    1. Turn the ignition on.
    2. With the scan tool, erase DTCs.
    3. Turn the ignition off for 75 seconds.
    4. Start the engine and let idle for up to five minutes.
    5. With the scan tool, read DTCs.

    Did the DTC reset?

    Yes

    - Go To 2.

    No

    - Perform the INTERMITTENT CONDITION diagnostic procedure. Refer to **INTERMITTENT CONDITION - 6.7L** .
2. **CHECK THE (K20) GENERATOR FIELD CONTROL CIRCUIT FOR A SHORT TO VOLTAGE**
    1. Turn the ignition off.
    2. Disconnect the PCM C1 harness connector.
    3. Turn the ignition on.

4. Measure the voltage on the (K20) Generator Field Control circuit at the Generator harness connector.

   Is there any voltage present?

   Yes

   - Go To 3.

   No

   - Go To 4.

3. **CHECK THE GENERATOR FOR A SHORT TO VOLTAGE**
   1. Disconnect the Generator field harness connector.
   2. Turn the ignition on.
   3. Measure the voltage on the (K20) Generator Field Control circuit at the Generator harness connector.

      Is there any voltage present?

      Yes

      - Repair the (K20) Generator Field Control circuit for a short to voltage.
      - Perform the POWERTRAIN VERIFICATION TEST - 6.7L. Refer to **POWERTRAIN VERIFICATION TEST - 6.7L** .

      No

      - Replace the Generator in accordance with the service information.
      - Perform the POWERTRAIN VERIFICATION TEST - 6.7L. Refer to **POWERTRAIN VERIFICATION TEST - 6.7L** .

4. **CHECK THE (K20) GENERATOR FIELD CONTROL CIRCUIT FOR AN OPEN/HIGH RESISTANCE**
   1. Disconnect the Generator field harness connector.
   2. Measure the resistance of the (K20) Generator Field Control circuit between the Generator harness connector and the PCM C1 harness connector.

      Is the resistance below 5.0 Ohms?

      Yes

      - Replace the Powertrain Control Module in accordance with the service information.
      - Perform the POWERTRAIN VERIFICATION TEST - 6.7L. Refer to **POWERTRAIN VERIFICATION TEST - 6.7L** .

No

- Repair the (K20) Generator Field Control circuit for an open or high resistance.
- Perform the POWERTRAIN VERIFICATION TEST - 6.7L. Refer to **POWERTRAIN VERIFICATION TEST - 6.7L** .

P0628-FUEL PUMP CONTROL CIRCUIT LOW

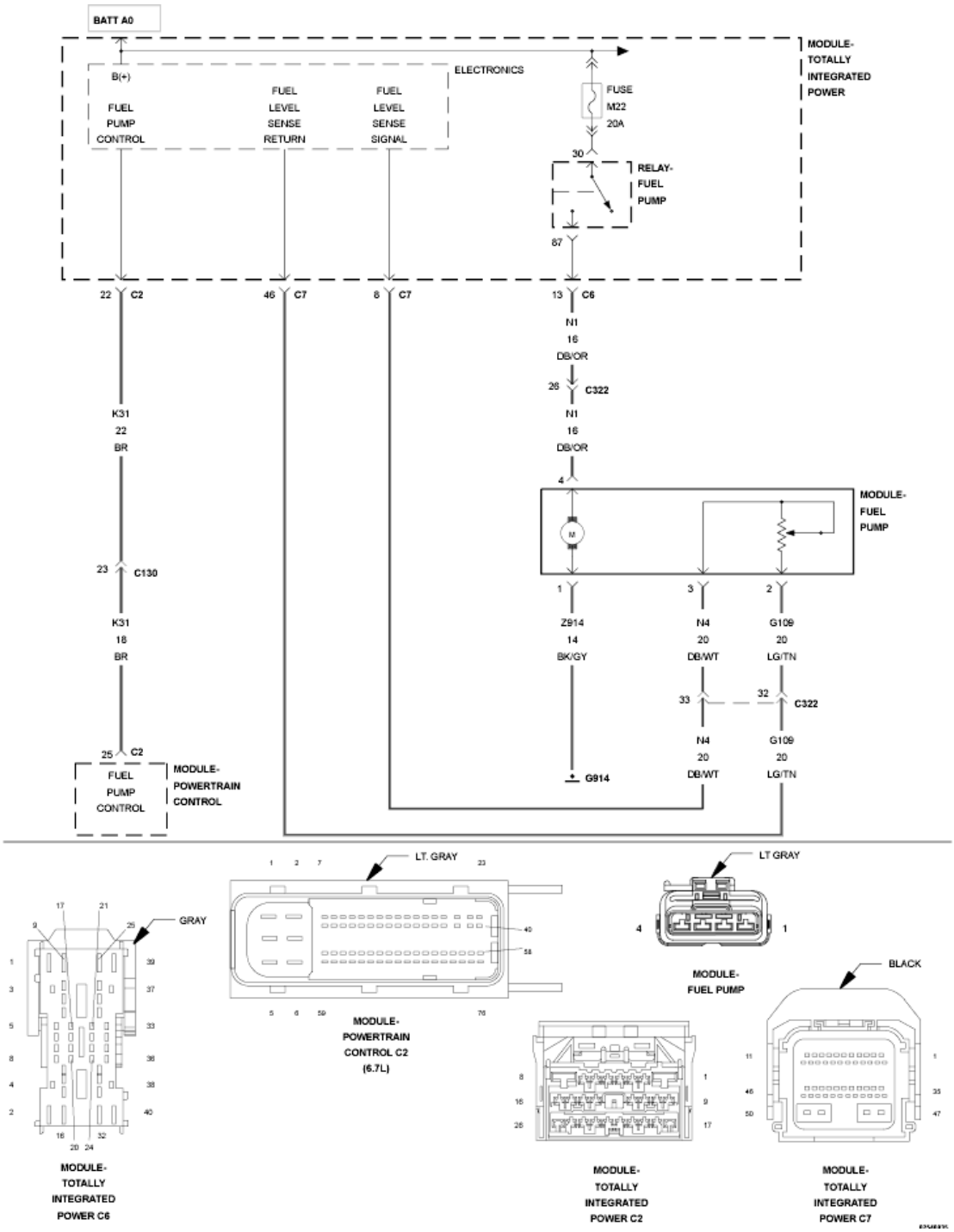

Fig. 86: Fuel Pump Module & TIPM Circuit Schematic
Courtesy of CHRYSLER GROUP, LLC

For a complete wiring diagram, **refer to appropriate SYSTEM WIRING DIAGRAMS article** .

THEORY OF OPERATION

The Fuel Lift Pump Control circuit is a low side driver inside the Powertrain Control Module (PCM). The PCM sends a ground signal to the Totally Integrated Power Module (TIPM). The TIPM then sends a 12 Volt feed to the Fuel Lift Pump. The Fuel Lift Pump grounds through a dedicated ground circuit. The MIL lamp and ETC lamp will illuminate immediately after this diagnostic runs and fails. During this time, the customer may experience engine stumble/stall or low power due to lack of fuel supply to the high pressure system. The PCM will turn off the MIL lamp once the diagnostic runs and passes in four consecutive drive cycles.

WHEN MONITORED:

While the key is on.

SET CONDITION:

The Fuel Lift Pump is commanded off by the PCM, but feedback voltage is high.

POSSIBLE CAUSES

Possible Causes
(K31) FUEL LIFT PUMP CONTROL CIRCUIT SHORTED TO VOLTAGE
POWERTRAIN CONTROL MODULE (PCM)
TOTALLY INTEGRATED POWER MODULE (TIPM)

Always perform the Pre-Diagnostic Troubleshooting procedure before proceeding. Refer to PRE-DIAGNOSTIC TROUBLESHOOTING PROCEDURE - 6.7L .

DIAGNOSTIC TEST

1. **ACTIVE DTC**
    1. Turn the ignition on.
    2. With the scan tool, record all Freeze frame data.
    3. With the scan tool, erase DTCs.
    4. Turn the ignition off for 75 seconds.
    5. Turn the ignition on.
    6. With the scan tool, read DTCs.

    Did the DTC reset?

    Yes

- Go To 2.

No

- Perform the INTERMITTENT CONDITION diagnostic procedure. Refer to **INTERMITTENT CONDITION - 6.7L** .

2. **CHECK THE (K31) FUEL LIFT PUMP CONTROL CIRCUIT FOR A SHORT TO VOLTAGE**

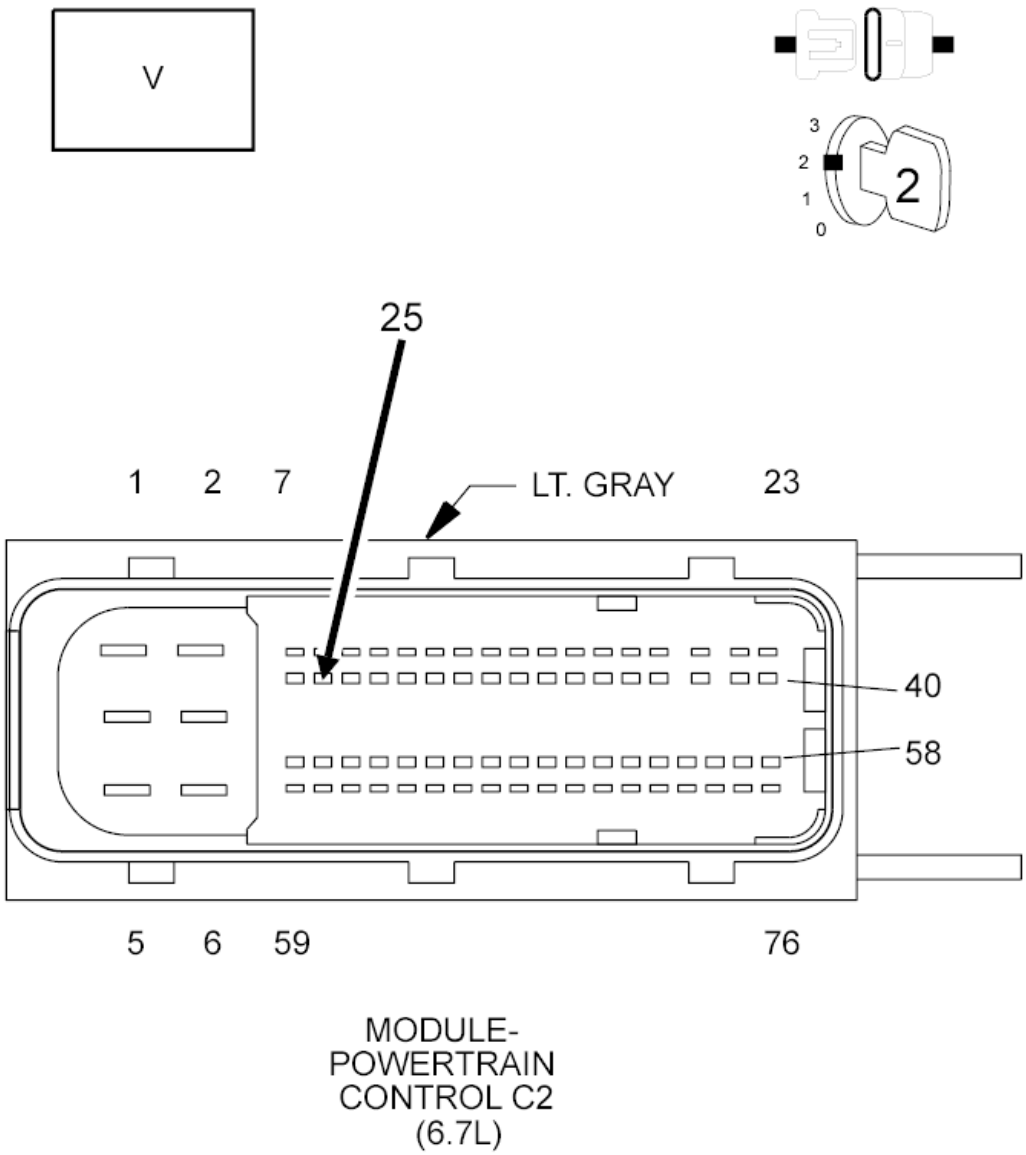

Fig. 87: Checking Fuel Lift Pump Control Circuit For A Short To Voltage
Courtesy of CHRYSLER GROUP, LLC

1. Turn the ignition off.

2. Disconnect the PCM C2 harness connector.

NOTE: Check connectors - Clean/repair as necessary.

3. Turn the ignition on.
4. Measure for voltage on the (K31) Fuel Lift Pump Control circuit at the PCM C2 harness connector.

   Is there any voltage present?

   Yes

   - Repair the (K31) Fuel Lift Pump Control circuit for a short to voltage.
   - Perform the POWERTRAIN VERIFICATION TEST - 6.7L. Refer to **POWERTRAIN VERIFICATION TEST - 6.7L** .

   No

   - Go To 3.

3. **CHECK THE PCM/TIPM**

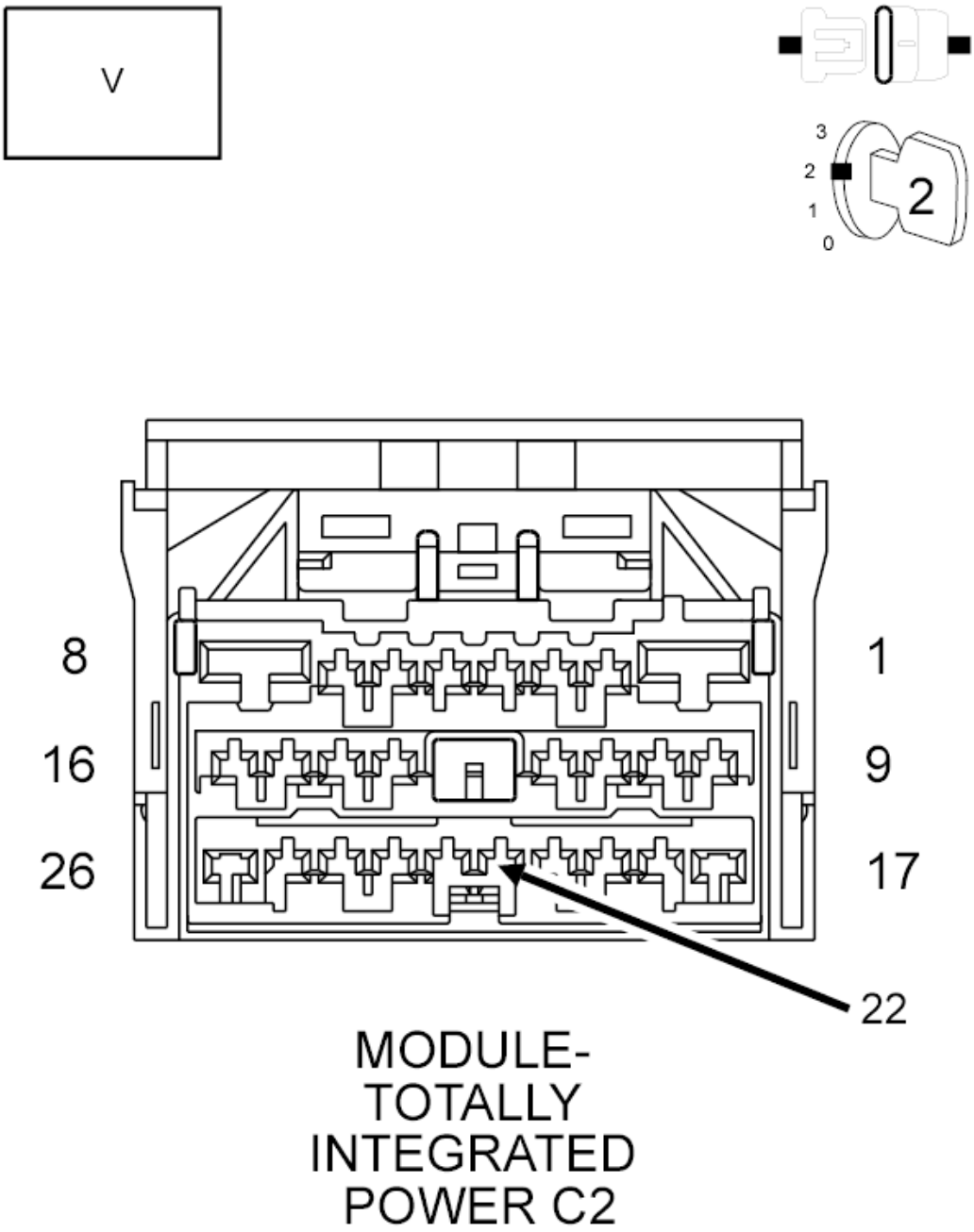

Fig. 88: Checking Fuel Lift Pump Control Circuit
Courtesy of CHRYSLER GROUP, LLC

1. Turn Ignition off.
2. Disconnect the TIPM C2 harness connector.
3. Reconnect the PCM C2 harness connector.
4. Turn the ignition on, engine off.

5. Using a 12-Volt test light connected to 12 Volts, probe the (K31) Fuel Lift Pump Control circuit at the TIPM C2 harness connector.
6. Toggle the lift pump actuator with the scan tool.

NOTE: The test light must illuminate brightly.

7. Compare the brightness to that of a direct connection to the battery.

   Does the test light cycle on and off and illuminate brightly?

   Yes

   - Replace the Totally Integrated Power Module (TIPM) in accordance with the service information.
   - Perform the BODY VERIFICATION TEST. Refer to **STANDARD PROCEDURE** .

   No

   - Replace the Powertrain Control Module (PCM) in accordance with the service information.
   - Perform the POWERTRAIN VERIFICATION TEST - 6.7L. Refer to **POWERTRAIN VERIFICATION TEST - 6.7L** .

P0629-FUEL PUMP CONTROL CIRCUIT HIGH

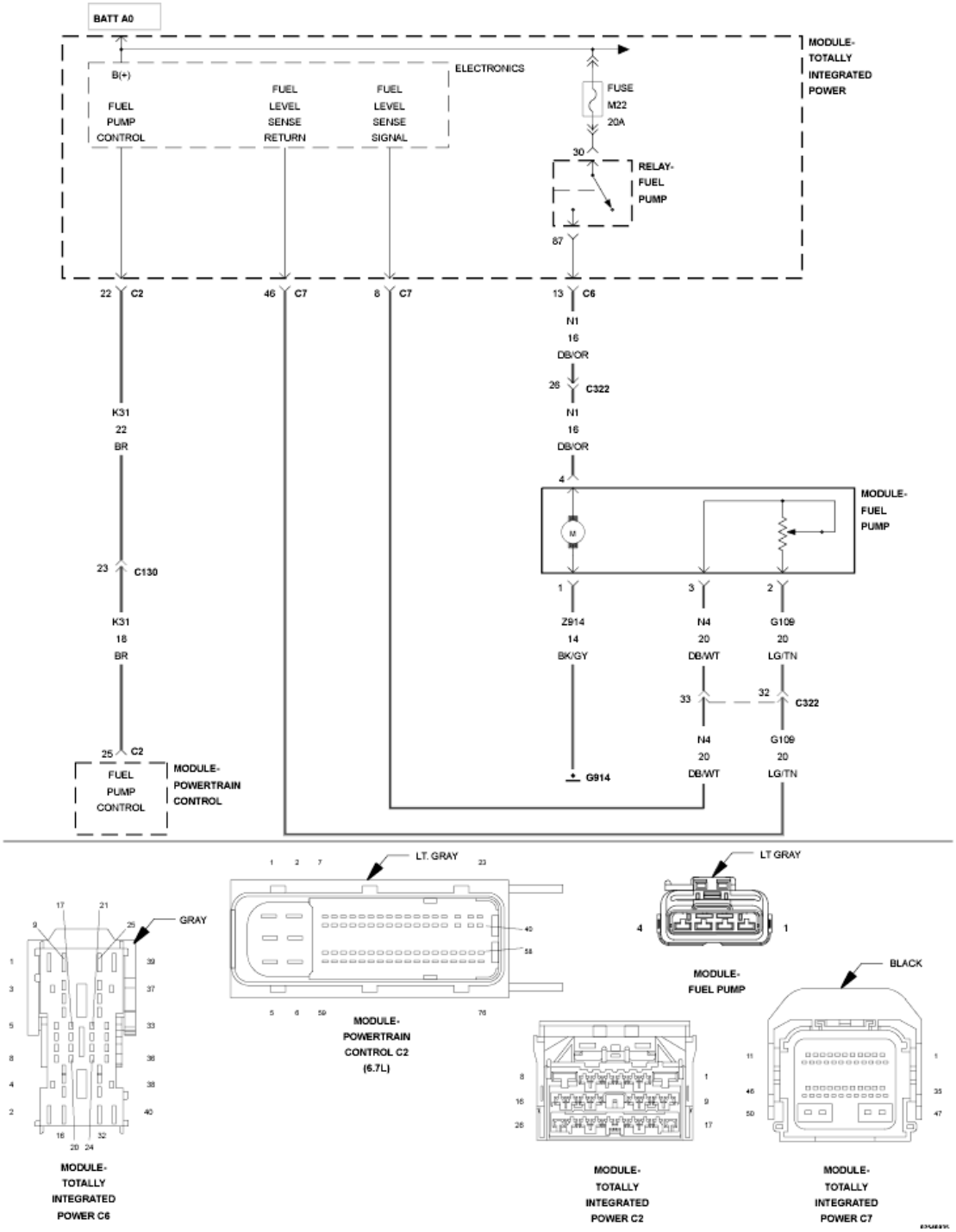

Fig. 89: Fuel Pump Module & TIPM Circuit Schematic
Courtesy of CHRYSLER GROUP, LLC

For a complete wiring diagram, **refer to appropriate SYSTEM WIRING DIAGRAMS article** .

THEORY OF OPERATION

The Fuel Lift Pump Control circuit is a low side driver inside the Powertrain Control Module (PCM). The PCM

sends a ground signal to the Totally Integrated Power Module (TIPM). The TIPM then sends a 12 Volt feed to the Fuel Lift Pump. The Fuel Lift Pump grounds through a dedicated ground circuit. The MIL lamp and ETC lamp will illuminate immediately after this diagnostic runs and fails. During this time, the customer may experience engine stumble/stall or low power due to lack of fuel supply to the high pressure system. The PCM will turn off the MIL lamp once the diagnostic runs and passes in four consecutive drive cycles.

WHEN MONITORED:

While the key is on.

SET CONDITION:

The Fuel Lift Pump is commanded on by the Powertrain Control Module (PCM), but feedback voltage is low.

POSSIBLE CAUSES

Possible Causes
(K31) FUEL LIFT PUMP CONTROL CIRCUIT OPEN/HIGH RESISTANCE
(K31) FUEL LIFT PUMP CONTROL CIRCUIT SHORTED TO GROUND
TOTALLY INTEGRATED POWER MODULE (TIPM)
POWERTRAIN CONTROL MODULE (PCM)

Always perform the Pre-Diagnostic Troubleshooting procedure before proceeding. Refer to PRE-DIAGNOSTIC TROUBLESHOOTING PROCEDURE - 6.7L .

DIAGNOSTIC TEST

1. **ACTIVE DTC**
    1. Turn the ignition on.
    2. With the scan tool, record all Freeze frame data.
    3. With the scan tool, erase DTCs.
    4. Turn the ignition off for 75 seconds.
    5. Turn the ignition on.
    6. With the scan tool, read DTCs.

    Did the DTC return?

    Yes

    - Go To 2.

    No

    - Perform the INTERMITTENT CONDITION diagnostic procedure. Refer to **INTERMITTENT CONDITION - 6.7L** .

2. **CHECK THE (K31) FUEL LIFT PUMP CONTROL CIRCUIT FOR A SHORT TO GROUND**

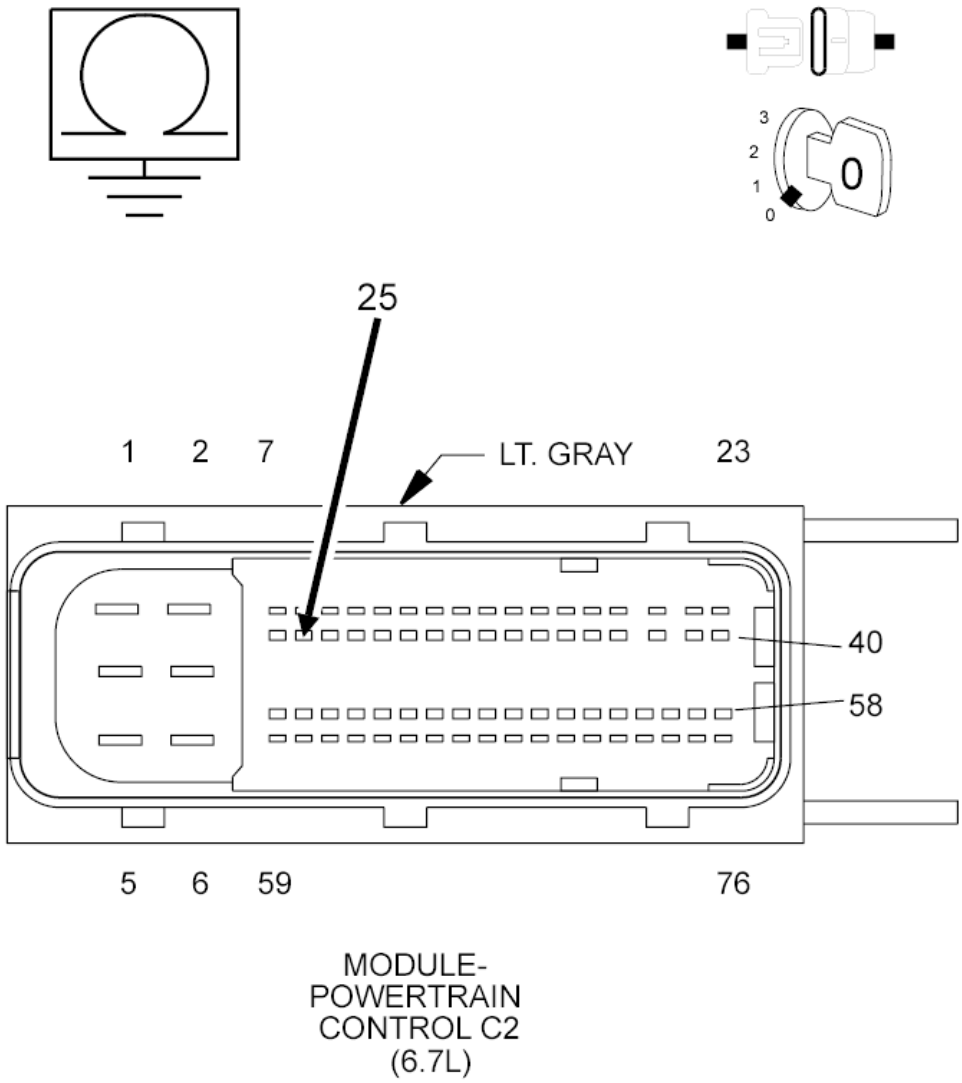

Fig. 90: Checking Fuel Lift Pump Control Circuit For A Short To Ground
Courtesy of CHRYSLER GROUP, LLC

1. Turn the ignition off.
2. Disconnect the PCM C2 harness connector.
3. Disconnect the TIPM C6 harness connector.
4. Measure the resistance between ground and the (K31) Fuel Lift Pump Control circuit at the PCM C2 harness connector.

   Is the resistance below 10k Ohms?

   Yes

- Repair the (K31) Fuel Lift Pump Control circuit for a short to ground.
- Perform the POWERTRAIN VERIFICATION TEST - 6.7L. Refer to **POWERTRAIN VERIFICATION TEST - 6.7L** .

No

- Go To 3.

3. **CHECK THE (K31) FUEL LIFT PUMP CONTROL CIRCUIT FOR AN OPEN/HIGH RESISTANCE**

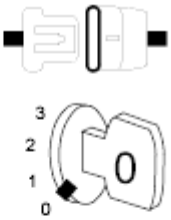

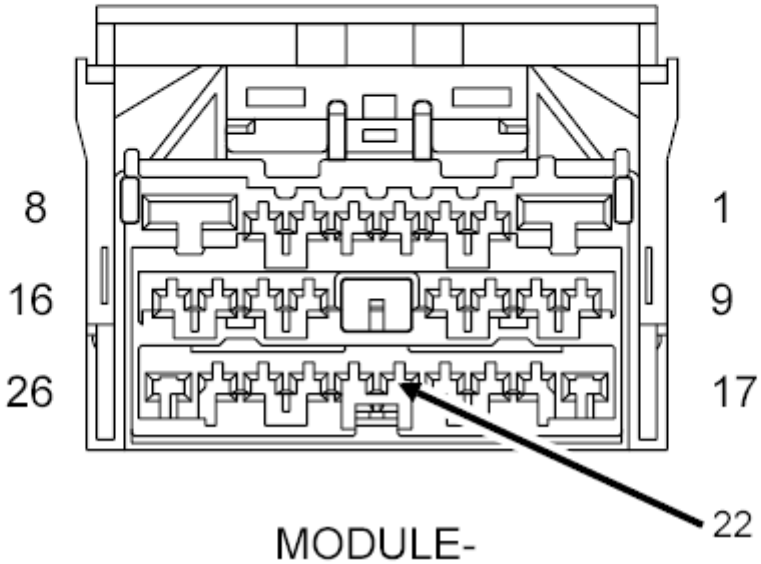

MODULE-
TOTALLY
INTEGRATED
POWER C2

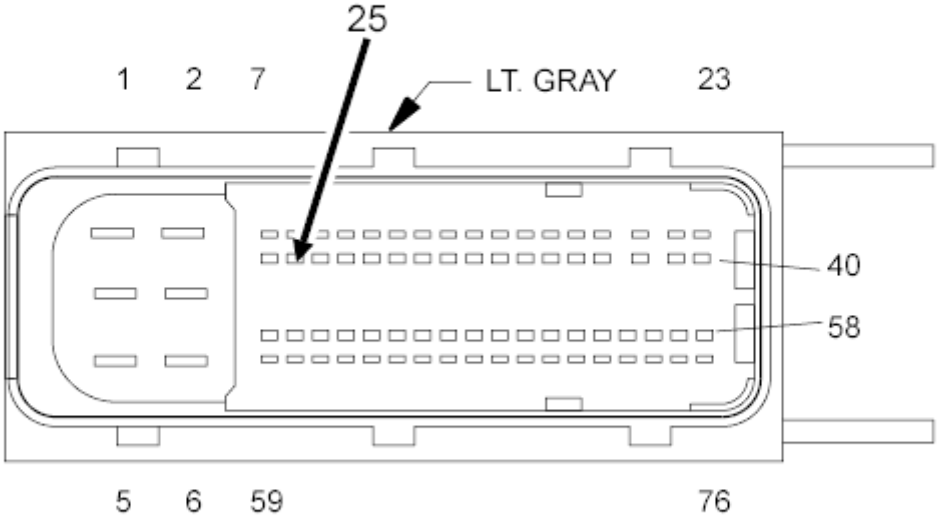

MODULE-
POWERTRAIN
CONTROL C2

Fig. 91: Checking Fuel Lift Pump Control Circuit For An Open/High Resistance
Courtesy of CHRYSLER GROUP, LLC

1. Measure the resistance of the (K31) Fuel Lift Pump Control circuit between the PCM C2 harness connector and the TIPM C2 harness connector.

   Is the resistance below 5.0 Ohms?

   Yes

   - Repair the (K31) Fuel Lift Pump Control circuit for an open or high resistance.
   - Perform the POWERTRAIN VERIFICATION TEST - 6.7L. Refer to **POWERTRAIN VERIFICATION TEST - 6.7L** .

   No

   - Go To 4.

4. **POWERTRAIN CONTROL MODULE**
   1. Reconnect the PCM C2 and TIPM C6 harness connectors.
   2. Using a back probing tool, back probe the (K31) Fuel Lift Pump Control circuit at the TIPM C6 harness connector.
   3. Turn the ignition on.
   4. With the scan tool toggle the Fuel Lift Pump actuator.
   5. Using a 12-volt test light connected to 12 Volts, probe the (K31) Fuel Lift Pump Control circuit at the TIPM C6 harness connector.

      NOTE: The test light should be illuminated and bright. Compare the brightness to that of a direct connection to the battery.

      Does the test light cycle on and off brightly?

      Yes

      - Replace the Totally Integrated Power Module (TIPM) in accordance with the service information.
      - Perform the POWERTRAIN VERIFICATION TEST - 6.7L. Refer to **POWERTRAIN VERIFICATION TEST - 6.7L** .

      No

      - Replace the Powertrain Control Module (PCM) in accordance with the service information.
      - Perform the POWERTRAIN VERIFICATION TEST - 6.7L. Refer to **POWERTRAIN VERIFICATION TEST - 6.7L** .

P062C-ETC LEVEL 2 MPH PERFORMANCE

For a complete wiring diagram, **refer to appropriate SYSTEM WIRING DIAGRAMS article** .

THEORY OF OPERATION

While in cruise control, this monitor verifies that vehicle speed stays within 5 MPH (8 KPH) of cruise control setpoint. The monitor will abort if during this condition engine speed is decreasing by more than 13 RPM/second. This is meant to detect a condition when the vehicle is travelling downhill as that could cause an increase in overall vehicle speed. This monitor will abort if the driver goes out of cruise mode by pressing the brake or accelerator pedal. Cruise will be disabled the rest of the drive cycle (until key off).

WHEN MONITORED:

Engine in cruise control mode but not travelling downhill.

SET CONDITION:

Vehicle speed is more than 5 MPH (8 KPH) over targeted cruise control speed.

POSSIBLE CAUSES

Possible Causes
VEHICLE SPEED SENSOR DTCS
SPEED CONTROL DTCS
POWERTRAIN CONTROL MODULE (PCM)

Always perform the Pre-Diagnostic Troubleshooting procedure before proceeding. Refer to PRE-DIAGNOSTIC TROUBLESHOOTING PROCEDURE - 6.7L .

DIAGNOSTIC TEST

1. **POWERTRAIN CONTROL MODULE**
    1. Ignition on, engine not running.
    2. With the scan tool, read DTCs.

    Are there other DTCs?

    Yes

    - Repair other DTCs first.

    No

    - Replace the Powertrain Control Module in accordance with the service information.
    - Perform the POWERTRAIN VERIFICATION TEST - 6.7L. Refer to **POWERTRAIN VERIFICATION TEST - 6.7L** .

P0630-VIN NOT PROGRAMMED IN PCM

For a complete wiring diagram, **refer to appropriate SYSTEM WIRING DIAGRAMS article** .

WHEN MONITORED:

While the key is on.

SET CONDITION:

The VIN was not calibrated into the Powertrain Control Module (PCM).

POSSIBLE CAUSES

Possible Causes
VIN NOT CALIBRATED INTO PCM

Always perform the Pre-Diagnostic Troubleshooting procedure before proceeding. Refer to PRE-DIAGNOSTIC TROUBLESHOOTING PROCEDURE - 6.7L .

DIAGNOSTIC TEST

1. **VIN NOT CALIBRATED INTO PCM**
    1. Using the scan tool, recalibrate the PCM with the proper VIN.

       Did the DTC P0630 return?

       Yes

       - Replace the Powertrain Control Module (PCM) in accordance with the service information.
       - Perform the POWERTRAIN VERIFICATION TEST - 6.7L. Refer to **POWERTRAIN VERIFICATION TEST - 6.7L** .

       No

       - Test Complete.

P0633-SKIM SECRET KEY NOT STORED IN PCM

For a complete wiring diagram, **refer to appropriate SYSTEM WIRING DIAGRAMS article** .

WHEN MONITORED:

While the key is on.

SET CONDITION:

The SKIM secret key was not calibrated into the Powertrain Control Module (PCM).

POSSIBLE CAUSES

Possible Causes
SKIM NOT CALIBRATED PROPERLY

Always perform the Pre-Diagnostic Troubleshooting procedure before proceeding. Refer to PRE-DIAGNOSTIC TROUBLESHOOTING PROCEDURE - 6.7L .

DIAGNOSTIC TEST

1. **SKIM DTCS**
    1. With the scan tool, read WIN DTC.

       Are any SKIM DTCs present in the WIN?

       Yes

       - Repair all SKIM DTCs first.
       - Perform the POWERTRAIN VERIFICATION TEST - 6.7L. Refer to **POWERTRAIN VERIFICATION TEST - 6.7L** .

       No

       - Go To 2.
2. **SKIM NOT CALIBRATED PROPERLY**
    1. Using the scan tool, recalibrate the PCM with the proper SKIM secret key.
    2. With the scan tool, erase DTCs.
    3. Cycle the ignition switch from on to off to on.
    4. With the scan tool, read DTCs.

       Did the DTC reset?

       No

       - Test Complete.
       - Perform the POWERTRAIN VERIFICATION TEST - 6.7L. Refer to **POWERTRAIN VERIFICATION TEST - 6.7L** .

       Yes

       - Replace the Powertrain Control Module in accordance with the service information.
       - Perform the POWERTRAIN VERIFICATION TEST - 6.7L. Refer to **POWERTRAIN VERIFICATION TEST - 6.7L** .

P063C-GENERATOR VOLTAGE SENSE LOW

For a complete wiring diagram, **refer to appropriate SYSTEM WIRING DIAGRAMS article** .

THEORY OF OPERATION

There are two communication lines between the Powertrain Control Module (PCM) and Generator. Based on sensed battery voltage, the PCM commands the Generator to charge the batteries to a desired voltage. The max voltage the EPCM will command the Generator to charge is 14.75 Volts. The PCM then receives feedback from the Generator on the voltage level it is charging the batteries. The PCM will not light a MIL lamp for this fault.

WHEN MONITORED:

With the engine running.

SET CONDITION:

Battery voltage exceeds charging voltage by more than a calibrated amount for a calibratable period of time.

POSSIBLE CAUSES

Possible Causes
DAMAGED, CORRODED, OR LOOSE CONNECTIONS
(A804) GENERATOR SENSE CIRCUIT SHORTED TO GROUND
(A804) GENERATOR SENSE CIRCUIT OPEN
OPEN CIRCUIT BETWEEN GENERATOR AND AUXILIARY BATTERY
GENERATOR
POWERTRAIN CONTROL MODULE (PCM)

Always perform the Pre-Diagnostic Troubleshooting procedure before proceeding. Refer to PRE-DIAGNOSTIC TROUBLESHOOTING PROCEDURE - 6.7L .

DIAGNOSTIC TEST

1. **BATTERY TERMINALS DAMAGED, CORRODED, OR LOOSE CONNECTIONS**

NOTE: **Batteries must be fully charged and capable of passing a battery load test. The generator belt tension must be within specification. Inspect the vehicle for any aftermarket equipment that may exceed the maximum Generator output.**

1. Visually inspect the positive and negative connections at the battery. Visually inspect the battery negative connections at the engine block.

   Are the connections free of corrosion and are they tight?

Yes

- Go To 2.

No

- Clean and/or tighten the connections.
- Perform the POWERTRAIN VERIFICATION TEST - 6.7L. Refer to **POWERTRAIN VERIFICATION TEST - 6.7L** .

2. **CHECK THE (A804) GENERATOR SENSE CIRCUIT FOR A SHORT TO GROUND**
   1. Turn the ignition off.
   2. Disconnect the Generator harness connector.
   3. Disconnect the PCM C1 harness connector.

      NOTE: Check connectors - Clean/repair as necessary.

   4. Measure the resistance between the (A804) Generator Sense circuit at the PCM C1 harness connector and ground.

      Is the resistance above 10k Ohms?

      Yes

      - Go To 3.

      No

      - Repair the (A804) Generator Sense circuit for a short to ground.
      - Perform the POWERTRAIN VERIFICATION TEST - 6.7L. Refer to **POWERTRAIN VERIFICATION TEST - 6.7L** .

3. **CHECK THE (A804) GENERATOR SENSE CIRCUIT FOR AN OPEN/HIGH RESISTANCE**
   1. Measure the resistance of the (A804) Generator Sense circuit between the Generator harness connector to the PCM C1 harness connector.

      Is the resistance below 5.0 Ohms?

      Yes

      - Go To 4.

      No

      - Repair the (A804) Generator Sense circuit for an open or high resistance.
      - Perform the POWERTRAIN VERIFICATION TEST - 6.7L. Refer to **POWERTRAIN VERIFICATION TEST - 6.7L** .

4. **CHECK FOR AN OPEN CIRCUIT BETWEEN GENERATOR AND AUXILIARY BATTERY**
    1. Disconnect the positive battery cables from both the primary and auxiliary battery.
    2. Disconnect the harness from the auxiliary battery to the Generator.
    3. Measure the resistance in the harness that connects the auxiliary battery to the Generator.

    Is the resistance below 5.0 Ohms?

    Yes

    - Go To 5.

    No

    - Repair/replace open positive battery cable in wiring harness.
    - Perform the POWERTRAIN VERIFICATION TEST - 6.7L. Refer to **POWERTRAIN VERIFICATION TEST - 6.7L** .
5. **CHECK THE GENERATOR**
    1. Measure the resistance between the Generator output stud and the generator Sense circuit on the Generator connector.

    NOTE: There should be approximately 2.4k Ohms resistance.

    Does the resistance measure approximately 2.4k Ohms?

    Yes

    - Replace Powertrain Control Module in accordance with the service information.
    - Perform the POWERTRAIN VERIFICATION TEST - 6.7L. Refer to **POWERTRAIN VERIFICATION TEST - 6.7L** .

    No

    - Replace Generator in accordance with the service information.
    - Perform the POWERTRAIN VERIFICATION TEST - 6.7L. Refer to **POWERTRAIN VERIFICATION TEST - 6.7L** .

P063D-GENERATOR VOLTAGE SENSE HIGH

For a complete wiring diagram, **refer to appropriate SYSTEM WIRING DIAGRAMS article** .

THEORY OF OPERATION

There are two communication lines between the Powertrain Control Module (PCM) and Generator. Based on sensed Battery voltage, the PCM commands the Generator to charge the batteries to a desired voltage. The max voltage the PCM will command the Generator to charge is 14.75-Volts. The PCM then receives feedback from

the Generator on the voltage level it is charging the batteries. The PCM will not light a MIL lamp for this fault, but the ETC lamp will be on solid.

WHEN MONITORED:

With the engine running.

SET CONDITION:

Charging voltage exceeds Battery voltage by more than a calibrated amount for a calibrated period of time.

POSSIBLE CAUSES

Possible Causes
SHORT CIRCUIT BETWEEN THE AUXILIARY BATTERY AND THE PCM
OPEN CIRCUIT BETWEEN THE PRIMARY BATTERY AND THE AUXILIARY BATTERY
SHORT CIRCUIT BETWEEN THE GENERATOR AND PRIMARY BATTERY
OPEN CIRCUIT BETWEEN THE GENERATOR AND PRIMARY BATTERY
POWERTRAIN CONTROL MODULE (PCM)

Always perform the Pre-Diagnostic Troubleshooting procedure before proceeding. Refer to PRE-DIAGNOSTIC TROUBLESHOOTING PROCEDURE - 6.7L .

DIAGNOSTIC TEST

1. **OTHER DTCS**

   NOTE: Batteries must be fully charged and capable of passing a Battery load test. The Generator belt tension must be within specification. Inspect the vehicle for any aftermarket equipment that may exceed the maximum Generator output.

   1. Ignition on, engine not running.
   2. Using the scan tool, read DTCs.

      Are there any other charging related faults?

      Yes

      - Go to and perform the appropriate diagnostic procedure.

      No

      - Go To 2.
2. **CHECK FOR A SHORT CIRCUIT BETWEEN THE AUXILIARY BATTERY AND THE PCM**
   1. Using the scan tool, monitor Battery voltage in the PCM.

2. Measure battery voltage of the primary Battery (one that powers PCM) using a Voltmeter.

   Is the reported voltage from the scan tool equal to both Battery voltages?

   Yes

   - Go To 3.

   No

   - Repair or replace open/short circuit in harness from Battery to PCM.
   - Perform the POWERTRAIN VERIFICATION TEST - 6.7L. Refer to **POWERTRAIN VERIFICATION TEST - 6.7L** .

3. **CHECK THE CIRCUIT BETWEEN THE PRIMARY BATTERY AND THE AUXILIARY BATTERY**
   1. Turn the ignition off.
   2. Using a Voltmeter, measure Battery voltage of the auxiliary Battery (one that Generator charges).

      Is the measured voltage of the auxiliary Battery equal to the measured voltage of the primary battery? NOTE: Primary battery voltage was measured in step 2.

      Yes

      - Go To 6.

      No

      - Go To 4.

4. **CHECK FOR AN OPEN CIRCUIT BETWEEN THE PRIMARY BATTERY AND THE AUXILIARY BATTERY**
   1. Disconnect the positive Battery cables from both the primary and auxiliary Battery.
   2. Disconnect the cable that connects the primary battery to the auxiliary Battery.

      NOTE: Check connectors - Clean/repair as necessary.

   3. Measure the resistance in the cable that connects the primary Battery to the auxiliary Battery.

      Is the resistance below 10.0 Ohms?

      Yes

      - Go To 5.

      No

- Repair/replace open circuit in the wiring harness.
- Perform the POWERTRAIN VERIFICATION TEST - 6.7L. Refer to **POWERTRAIN VERIFICATION TEST - 6.7L** .

5. **CHECK FOR A SHORT CIRCUIT BETWEEN THE GENERATOR AND PRIMARY BATTERY**
   1. Turn the ignition off.
   2. Measure the resistance between each end of the harness and Battery ground.

      Is the measured resistance above 10k Ohms?

      Yes

      - Go To 6.

      No

      - Repair/replace short circuit in the wiring harness.
      - Perform the POWERTRAIN VERIFICATION TEST - 6.7L. Refer to **POWERTRAIN VERIFICATION TEST - 6.7L** .
6. **CHECK FOR AN OPEN CIRCUIT BETWEEN THE GENERATOR AND PRIMARY BATTERY**
   1. Disconnect the power cable from the Generator stud to the auxiliary Battery.
   2. Measure the resistance in the harness that connects the auxiliary Battery to the Generator.

      Is the resistance less than 10.0 Ohms?

      Yes

      - Go To 7.

      No

      - Repair/replace open circuit in the wiring harness.
      - Perform the POWERTRAIN VERIFICATION TEST - 6.7L. Refer to **POWERTRAIN VERIFICATION TEST - 6.7L** .
7. **POWERTRAIN CONTROL MODULE**
   1. Disconnect the Generator harness connector.
   2. Disconnect the power cable from the Generator stud to the auxiliary Battery.

      NOTE: Check connectors - Clean/repair as necessary.

   3. Measure the resistance between the Generator output stud and the Generator Sense circuit at the Generator.

      Is the resistance below 10.0 Ohms?

Yes

- Replace the Powertrain Control Module in accordance with the service information.
- Perform the POWERTRAIN VERIFICATION TEST - 6.7L. Refer to **POWERTRAIN VERIFICATION TEST - 6.7L** .

No

- Replace the Generator in accordance with the service information.
- Perform the POWERTRAIN VERIFICATION TEST - 6.7L. Refer to **POWERTRAIN VERIFICATION TEST - 6.7L** .

P0642-SENSOR REFERENCE VOLTAGE 1 CIRCUIT LOW

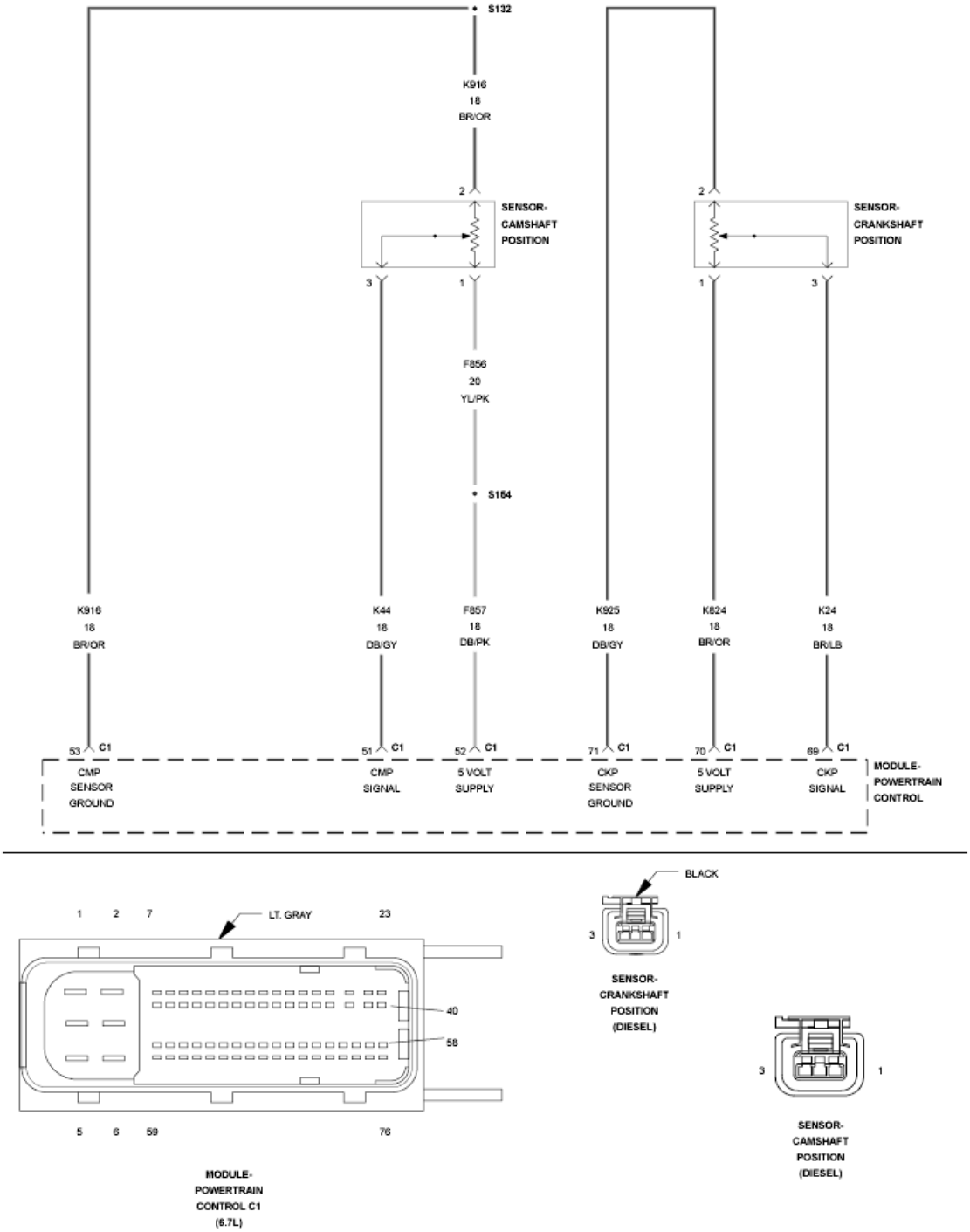

Fig. 92: Crankshaft Position Sensor & Camshaft Position Sensor Circuit Schematic
Courtesy of CHRYSLER GROUP, LLC

For a complete wiring diagram, **refer to appropriate SYSTEM WIRING DIAGRAMS article** .

THEORY OF OPERATION

This sensor supply circuit provides a 5-Volt supply to the Crankshaft Position Sensor. A MIL lamp will be lit

immediately after this diagnostic runs and fails. The MIL lamp will turn off once the diagnostic runs and passes in four consecutive drive cycles.

WHEN MONITORED:

With the key on.

SET CONDITION:

Voltage detected on the 5-Volt Supply circuit is below a calibrated value.

POSSIBLE CAUSES

Possible Causes
CRANKSHAFT POSITION SENSOR
(K824) 5-VOLT SHORTED TO GROUND
(K824) 5-VOLT SUPPLY SHORTED TO ANOTHER CIRCUIT
POWERTRAIN CONTROL MODULE (PCM)

Always perform the Pre-Diagnostic Troubleshooting procedure before proceeding. Refer to PRE-DIAGNOSTIC TROUBLESHOOTING PROCEDURE - 6.7L .

DIAGNOSTIC TEST

1. **ACTIVE DTC**
    1. Turn the ignition on.
    2. With the scan tool, record all Freeze frame data.
    3. With the scan tool, erase DTCs.
    4. Turn the ignition off for 75 seconds.
    5. Turn the ignition on.
    6. With the scan tool, read DTCs.

    Did the DTC reset?

    Yes

    - Go To 2.

    No

    - Perform the INTERMITTENT CONDITION diagnostic procedure. Refer to **INTERMITTENT CONDITION - 6.7L** .
2. **CHECK THE CRANKSHAFT POSITION SENSOR**
    1. Ignition on.

2. Disconnect the Crankshaft Position Sensor.

NOTE: Check connectors - Clean/repair as necessary.

3. Measure the voltage on the (K824) 5-Volt Supply circuit at the Crankshaft Position Sensor harness connector.

   Is the voltage reading between 4.9 and 5.1 Volts?

   Yes

   - Replace the Crankshaft Position Sensor in accordance with the service information.
   - Perform the POWERTRAIN VERIFICATION TEST - 6.7L. Refer to **POWERTRAIN VERIFICATION TEST - 6.7L** .

   No

   - Go To 3.

3. **CHECK THE (K824) 5-VOLT FOR A SHORT TO GROUND**

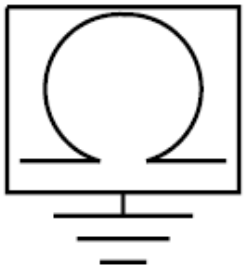

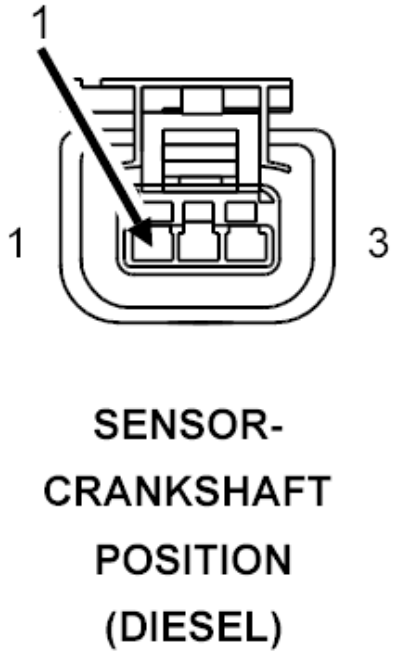

Fig. 93: Measuring Resistance Between 5-Volt Supply Circuit & Battery Negative
Courtesy of CHRYSLER GROUP, LLC

1. Turn the ignition off.
2. Disconnect the PCM C1 harness connector.

NOTE: Check connectors - Clean/repair as necessary.

3. Measure the resistance between ground and the (K824) 5-Volt Supply circuit at the Crankshaft Position Sensor harness connector.

   Is the resistance below 10k Ohms?

   Yes

- Repair the (K824) 5-Volt Supply circuit for a short to ground.
- Perform the POWERTRAIN VERIFICATION TEST - 6.7L. Refer to **POWERTRAIN VERIFICATION TEST - 6.7L** .

No

- Go To 4.

4. **CHECK THE (K824) 5-VOLT SUPPLY CIRCUIT SHORTED TO ANOTHER CIRCUIT**
   1. Measure the resistance between the (K824) 5-Volt Supply circuit and all other circuits in the PCM C1 harness connector.

      Is the resistance below 10k Ohms between the (K854) 5-Volt Supply circuit and any of the circuits?

      Yes

      - Repair the short to the circuit that measured less than 10k Ohms.
      - Perform the POWERTRAIN VERIFICATION TEST - 6.7L. Refer to **POWERTRAIN VERIFICATION TEST - 6.7L** .

      No

      - Replace the Powertrain Control Module in accordance with the service information.
      - Perform the POWERTRAIN VERIFICATION TEST - 6.7L. Refer to **POWERTRAIN VERIFICATION TEST - 6.7L** .

P0643-SENSOR REFERENCE VOLTAGE 1 CIRCUIT HIGH

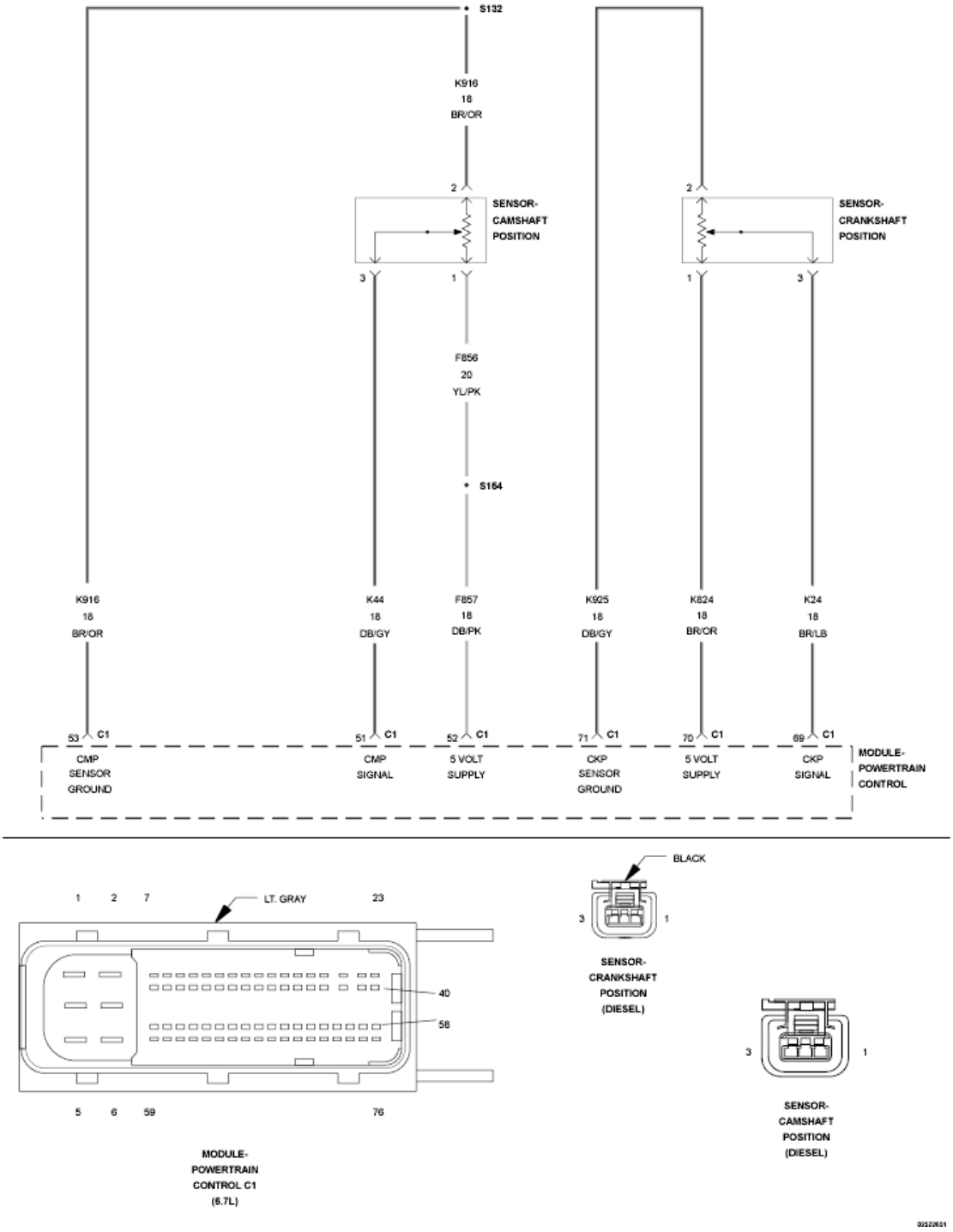

Fig. 94: Crankshaft Position Sensor & Camshaft Position Sensor Circuit Schematic
Courtesy of CHRYSLER GROUP, LLC

For a complete wiring diagram, **refer to appropriate SYSTEM WIRING DIAGRAMS article** .

THEORY OF OPERATION

This sensor supply circuit provides a 5-Volt supply to the Crankshaft Position Sensor. A MIL lamp will be lit

immediately after this diagnostic runs and fails. The MIL lamp will turn off once the diagnostic runs and passes in four consecutive drive cycles.

WHEN MONITORED:

With the key on.

SET CONDITION:

Voltage detected on the 5-Volt Supply circuit was above a calibrated value.

POSSIBLE CAUSES

Possible Causes
(K824) 5-VOLT SUPPLY CIRCUIT SHORTED TO VOLTAGE
POWERTRAIN CONTROL MODULE (PCM)

Always perform the Pre-Diagnostic Troubleshooting procedure before proceeding. Refer to PRE-DIAGNOSTIC TROUBLESHOOTING PROCEDURE - 6.7L .

DIAGNOSTIC TEST

1. **ACTIVE DTC**
    1. Turn the ignition on.
    2. With the scan tool, record all Freeze frame data.
    3. With the scan tool, erase DTCs.
    4. Turn the ignition off for 75 seconds.
    5. Turn the ignition on.
    6. With the scan tool, read DTCs.

    Did the DTC reset?

    Yes

    - Go To 2.

    No

    - Perform the INTERMITTENT CONDITION diagnostic procedure. Refer to **INTERMITTENT CONDITION - 6.7L** .
2. **CHECK THE (K824) 5-VOLT CIRCUIT FOR A SHORT TO VOLTAGE**

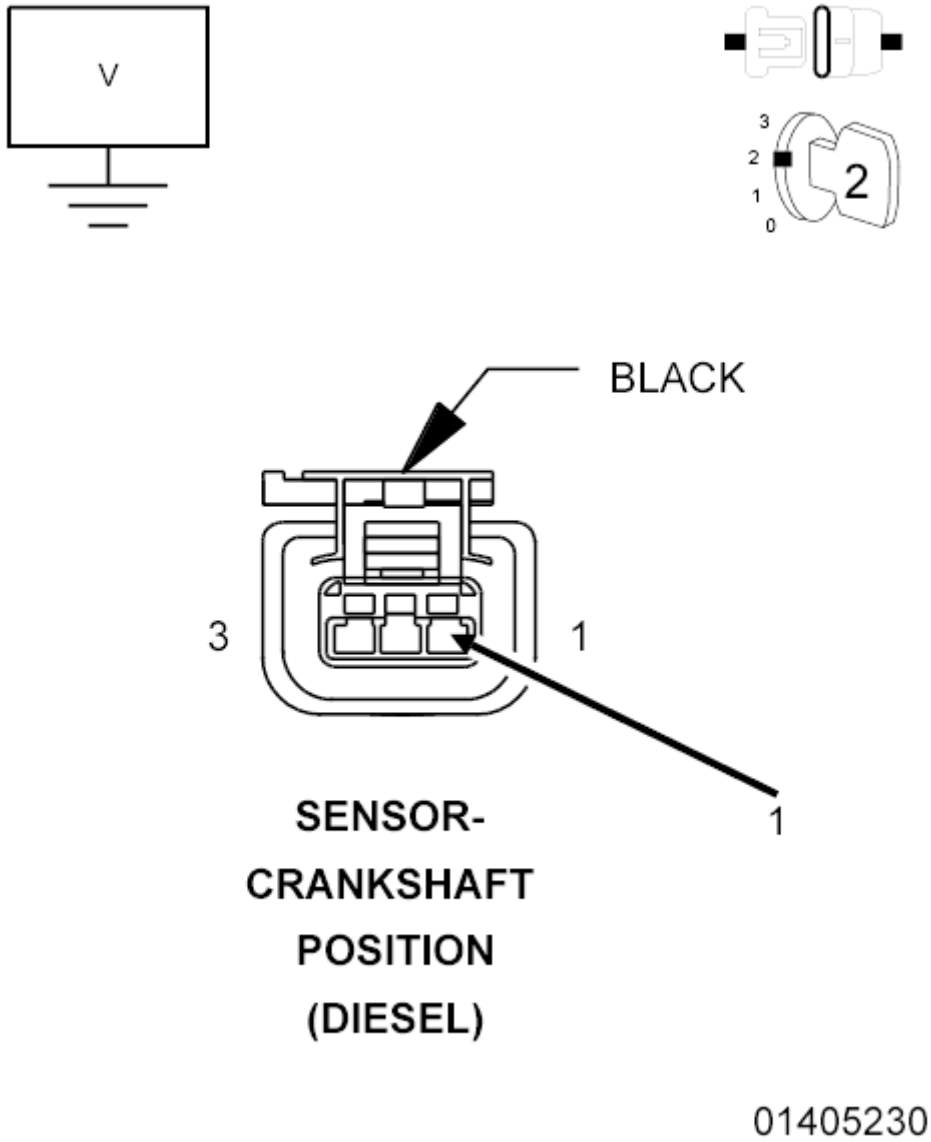

Fig. 95: Checking CKP Sensor 5-Volt Supply Circuit For Short To Voltage
Courtesy of CHRYSLER GROUP, LLC

1. Disconnect the Crankshaft Position Sensor harness connector.

   NOTE: Check connectors - Clean/repair as necessary.

2. Measure the voltage on the (K824) 5-Volt Supply circuit at the Crankshaft Position Sensor harness connector.

   Is the voltage greater than 5.1 Volts?

   Yes

- Go To 3.

No

- Perform the INTERMITTENT CONDITION diagnostic procedure. Refer to **INTERMITTENT CONDITION - 6.7L** .

3. **CHECK THE (K824) 5-VOLT SUPPLY CIRCUIT FOR A SHORT TO ANOTHER CIRCUIT**
   1. Disconnect the PCM C1 harness connector.

      NOTE: Check connectors - Clean/repair as necessary.

   2. Measure the resistance between the (K824) 5-Volt Supply circuit and all other circuits in the PCM C1 connector.

      Is the resistance below 10k Ohms between the (K824) 5-Volt Supply circuit and any of the circuits?

      Yes

      - Repair the short to the circuit that measured below 10k Ohms.
      - Perform the POWERTRAIN VERIFICATION TEST - 6.7L. Refer to **POWERTRAIN VERIFICATION TEST - 6.7L** .

      No

      - Replace the Powertrain Control Module in accordance with the service information.
      - Perform the POWERTRAIN VERIFICATION TEST - 6.7L. Refer to **POWERTRAIN VERIFICATION TEST - 6.7L** .

P0646-A/C CONTROL CIRCUIT LOW

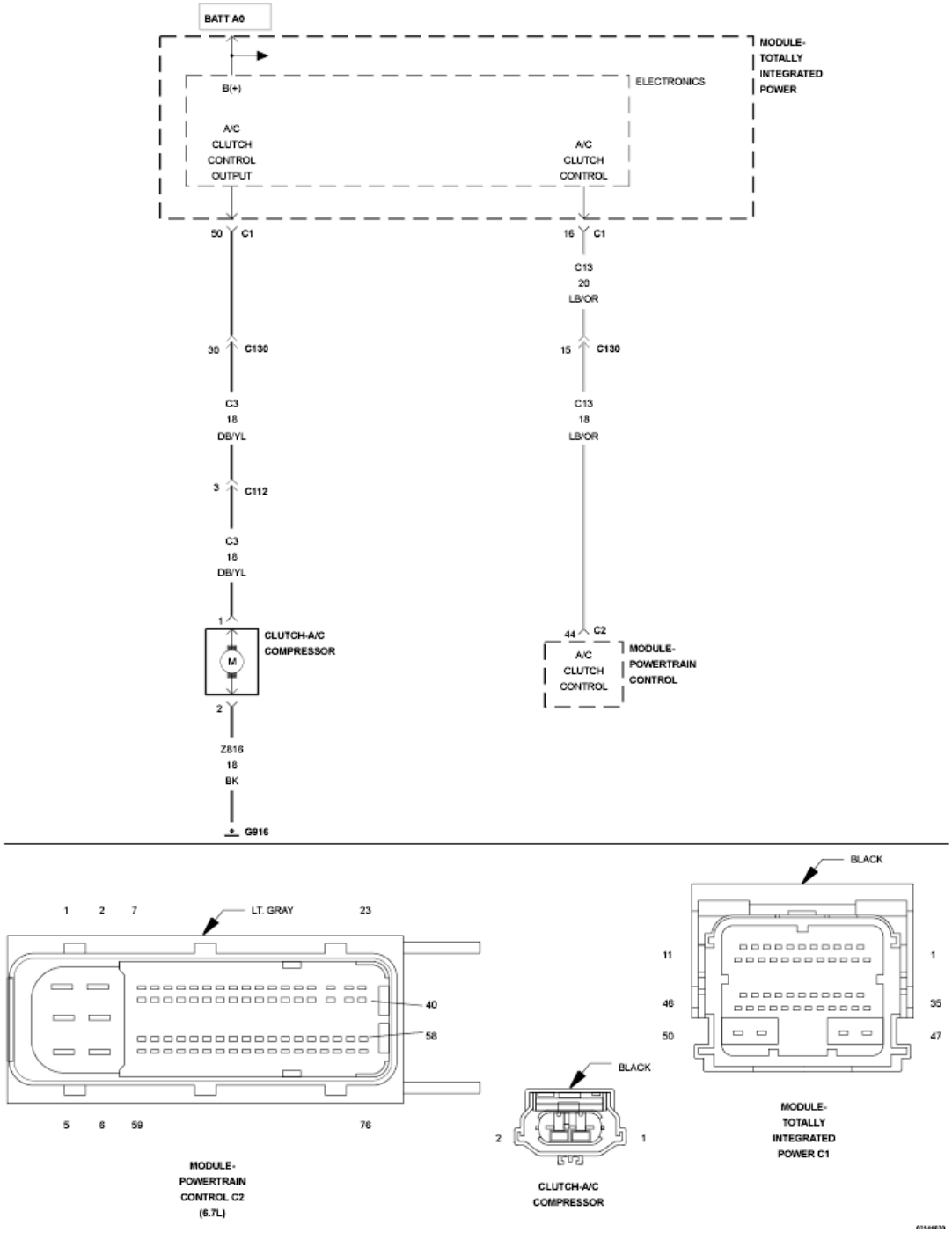

Fig. 96: A/C Compressor Clutch & TIPM Circuit Schematic
Courtesy of CHRYSLER GROUP, LLC

For a complete wiring diagram, **refer to appropriate SYSTEM WIRING DIAGRAMS article** .

THEORY OF OPERATION

The Powertrain Control Module (PCM) receives various information from the operator controls and A/C system to determine when the A/C Compressor Clutch should be turned on. The Totally Integrated Power Module

(TIPM) receives a signal from the PCM to turn on the A/C Compressor Clutch. The TIPM supplies 12 Volts to the A/C Compressor Clutch which has a dedicated ground circuit. You will not receive a MIL lamp for this fault, but the customer may complain of poor A/C performance.

WHEN MONITORED:

When the ignition is on.

SET CONDITION:

When the signal from the A/C Compressor Clutch circuit output does not match the signal from the A/C Clutch feedback.

POSSIBLE CAUSES

Possible Causes
LOW VOLTAGE SUPPLY TO THE TIPM (C13) A/C CLUTCH COMPRESSOR CONTROL CIRCUIT OPEN/HIGH RESISTANCE (C13) A/C CLUTCH CONTROL COMPRESSOR CIRCUIT SHORTED TO GROUND
TOTALLY INTEGRATED POWER MODULE (TIPM) POWERTRAIN CONTROL MODULE (PCM)

Always perform the Pre-Diagnostic Troubleshooting procedure before proceeding. Refer to PRE-DIAGNOSTIC TROUBLESHOOTING PROCEDURE - 6.7L .

DIAGNOSTIC TEST

1. **CHECK THE (C13) A/C COMPRESSOR CLUTCH CONTROL CIRCUIT FOR AN OPEN/HIGH RESISTANCE**

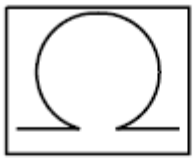

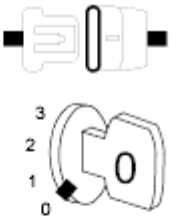

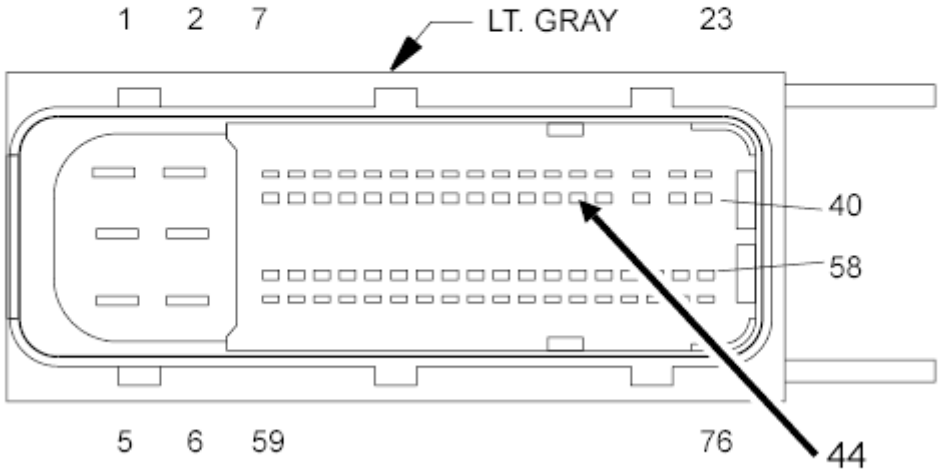

MODULE-
POWERTRAIN
CONTROL C2
(6.7L)

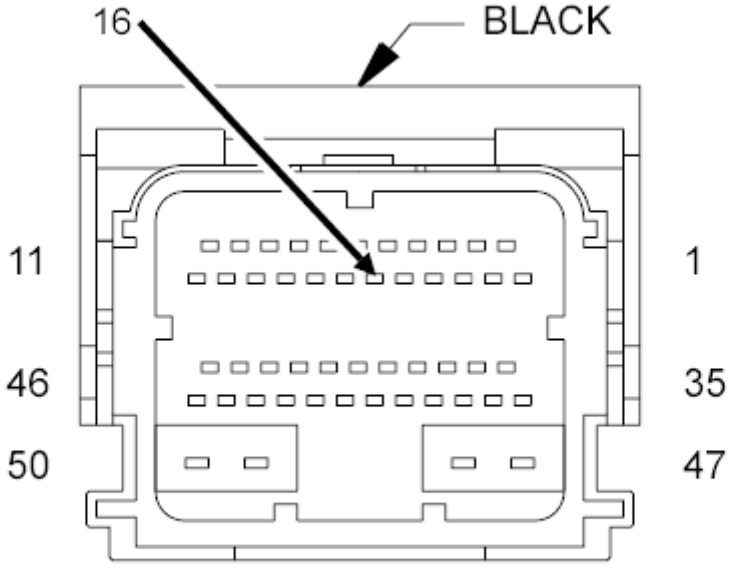

MODULE-
TOTALLY
INTEGRATED
POWER C1

Fig. 97: Checking A/C Compressor Clutch Control Circuit For An Open Or High Resistance
Courtesy of CHRYSLER GROUP, LLC

1. Turn the ignition off.
2. Disconnect the PCM C2 harness connector.
3. Disconnect the TIPM C1 harness connector.

NOTE: Check connectors - Clean/repair as necessary.

4. Measure the resistance of the (C13) A/C Compressor Clutch Control circuit between the PCM C2 and TIPM C1 harness connectors.

   Is the resistance below 5.0 Ohms?

   No

   - Repair the (C13) A/C Compressor Clutch Control circuit for an open or high resistance.
   - Perform the POWERTRAIN VERIFICATION TEST - 6.7L. Refer to **POWERTRAIN VERIFICATION TEST - 6.7L** .

   Yes

   - Go To 2.

2. **CHECK THE (C13) A/C COMPRESSOR CLUTCH CIRCUIT FOR A SHORT TO GROUND**

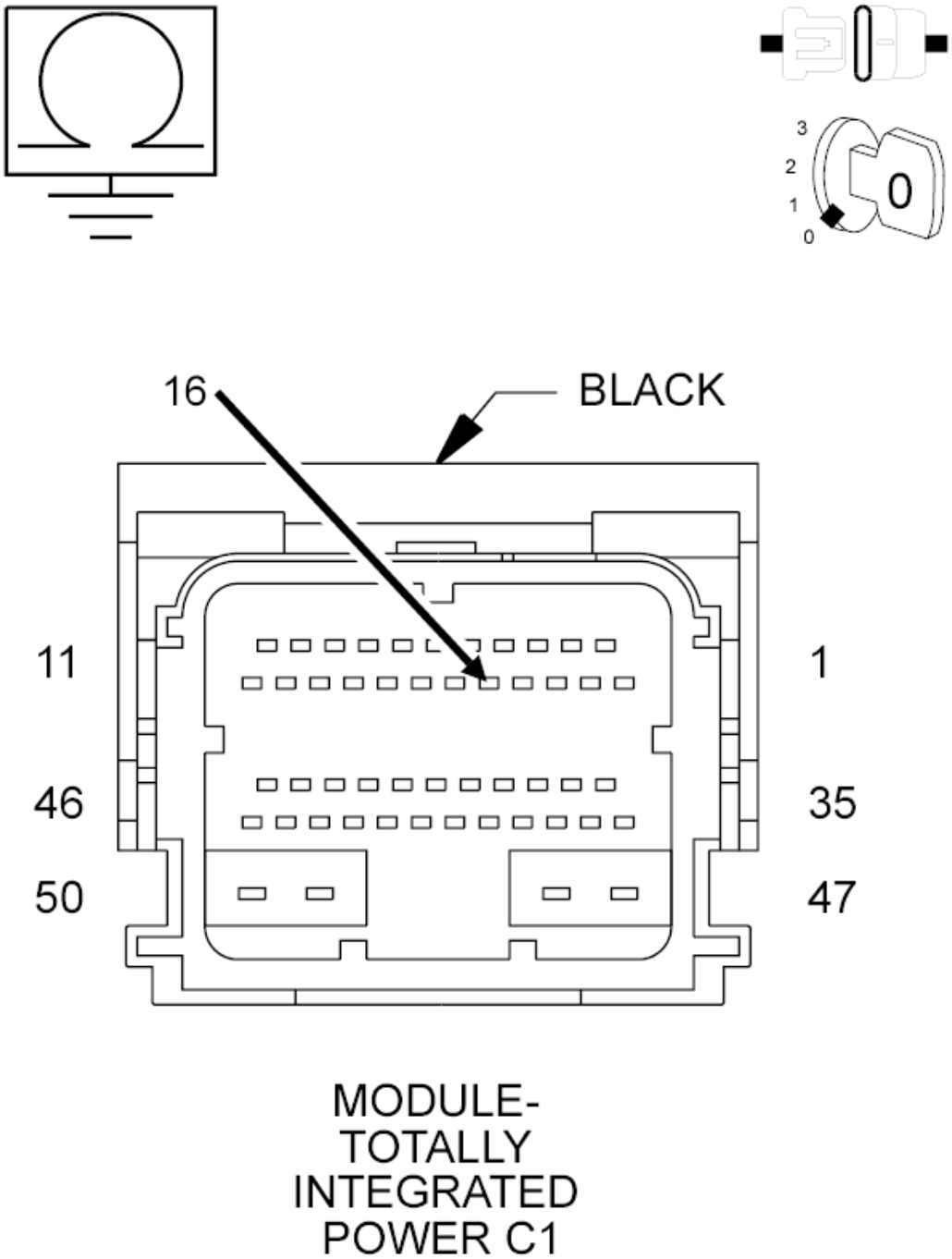

Fig. 98: Checking A/C Compressor Clutch Circuit For A Short To Ground
Courtesy of CHRYSLER GROUP, LLC

1. Measure the resistance between ground and the (C13) A/C Compressor Clutch Control circuit at the TIPM C1 harness connector.

   Is the resistance below 10k Ohms?

Yes

- Go To 3.

No

- Repair the (C13) A/C Compressor Clutch Control circuit for a short to ground.
- Perform the POWERTRAIN VERIFICATION TEST - 6.7L. Refer to **POWERTRAIN VERIFICATION TEST - 6.7L** .

3. **CHECK THE PCM/TIPM**

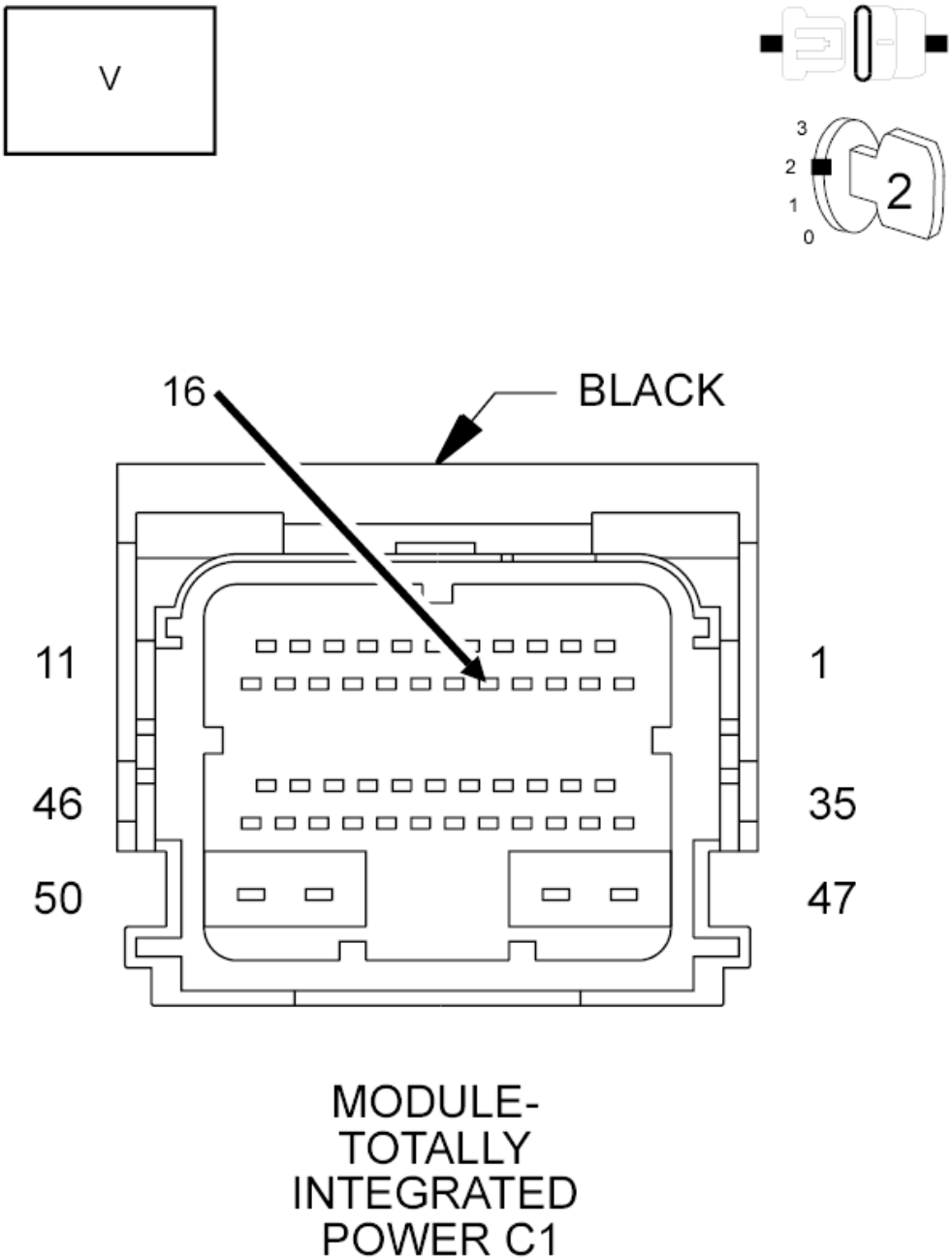

Fig. 99: Checking PCM/TIPM Control Circuits
Courtesy of CHRYSLER GROUP, LLC

1. Reconnect the PCM C2 harness connector.
2. Ignition on, engine not running.
3. Using a 12-Volt test light connected to battery positive, probe the (C13) A/C Clutch Control circuit at the TIPM C1 harness connector while actuating the A/C Compressor Clutch circuit with the scan tool.

NOTE: The test light must illuminate brightly.

4. Compare the brightness to that of a direct connection to the Battery.

   Does the test light illuminate brightly?

   Yes

   - Replace the Totally Integrated Power Module (TIPM) in accordance with the service information.
   - Perform the BODY VERIFICATION TEST. Refer to **STANDARD PROCEDURE** .

   No

   - Replace the Powertrain Control Module (PCM) in accordance with the service information.
   - Perform the POWERTRAIN VERIFICATION TEST - 6.7L. Refer to **POWERTRAIN VERIFICATION TEST - 6.7L** .

P0647-A/C CONTROL CIRCUIT HIGH

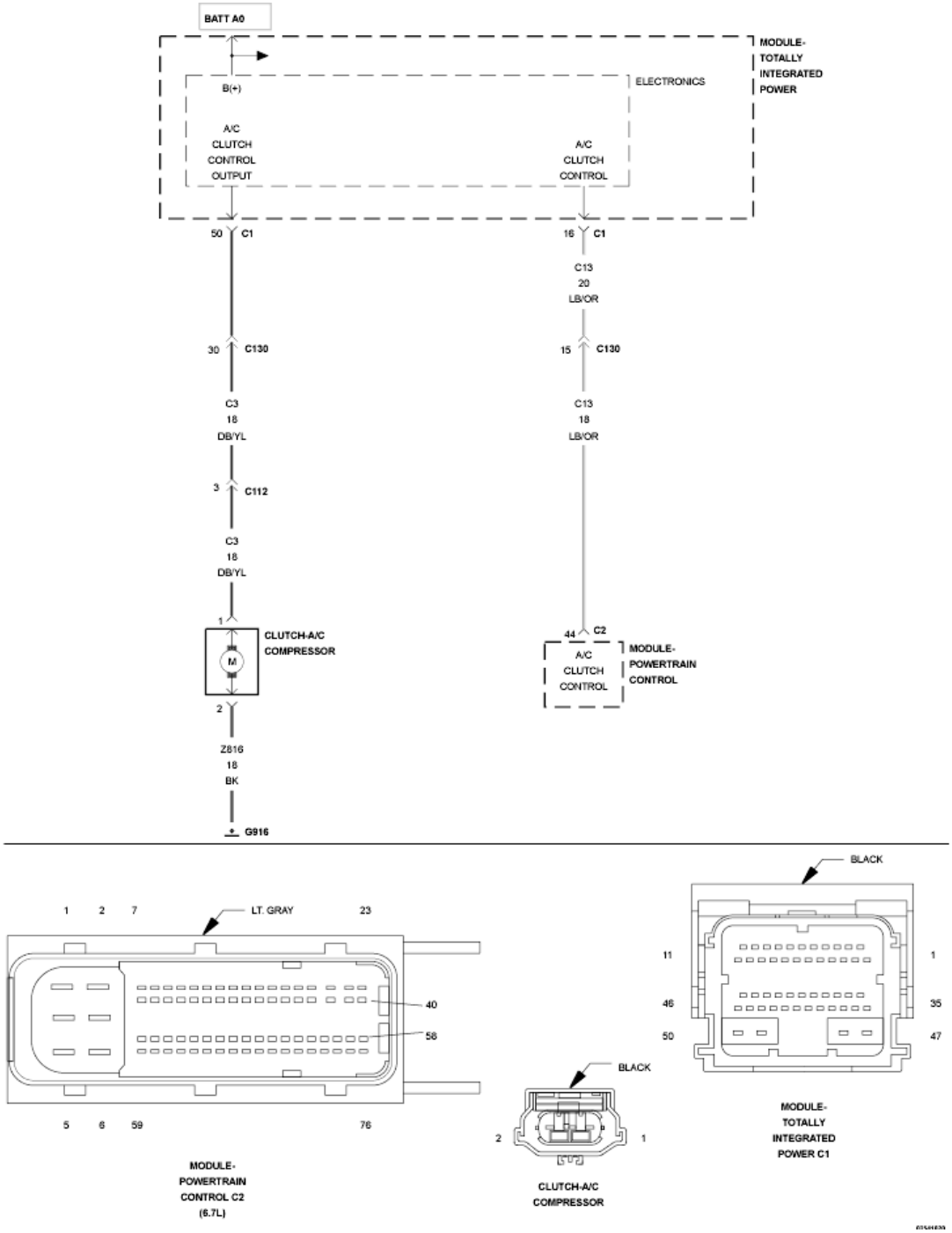

Fig. 100: A/C Compressor Clutch & TIPM Circuit Schematic
Courtesy of CHRYSLER GROUP, LLC

For a complete wiring diagram, **refer to appropriate SYSTEM WIRING DIAGRAMS article** .

THEORY OF OPERATION

The Powertrain Control Module (PCM) receives various information from the operator controls and engine sensor inputs to determine when the A/C Compressor Clutch should be turned on. The Totally Integrated Power

Module (TIPM) receives a signal from the PCM to turn on the A/C Compressor Clutch. The A/C Pressure Sensor information is an input to the TIPM. The TIPM uses the A/C Pressure Sensor input signal to determine if the A/C Compressor Clutch should be turned on. The TIPM supplies 12-Volts to the A/C compressor clutch which has a dedicated ground circuit. You will not receive a MIL lamp for this fault, but the customer may complain of poor A/C performance.

WHEN MONITORED:

When the ignition is on.

SET CONDITION:

When the signal from the A/C Compressor Clutch output does not match the signal from the A/C Compressor Clutch feedback.

POSSIBLE CAUSES

Possible Causes
(C13) A/C COMPRESSOR CLUTCH CONTROL CIRCUIT SHORTED TO VOLTAGE
TOTALLY INTEGRATED POWER MODULE (TIPM)
POWERTRAIN CONTROL MODULE (PCM)

Always perform the Pre-Diagnostic Troubleshooting procedure before proceeding. Refer to PRE-DIAGNOSTIC TROUBLESHOOTING PROCEDURE - 6.7L .

DIAGNOSTIC TEST

1. **CHECK THE (C13) A/C COMPRESSOR CLUTCH CONTROL CIRCUIT FOR A SHORT TO VOLTAGE**

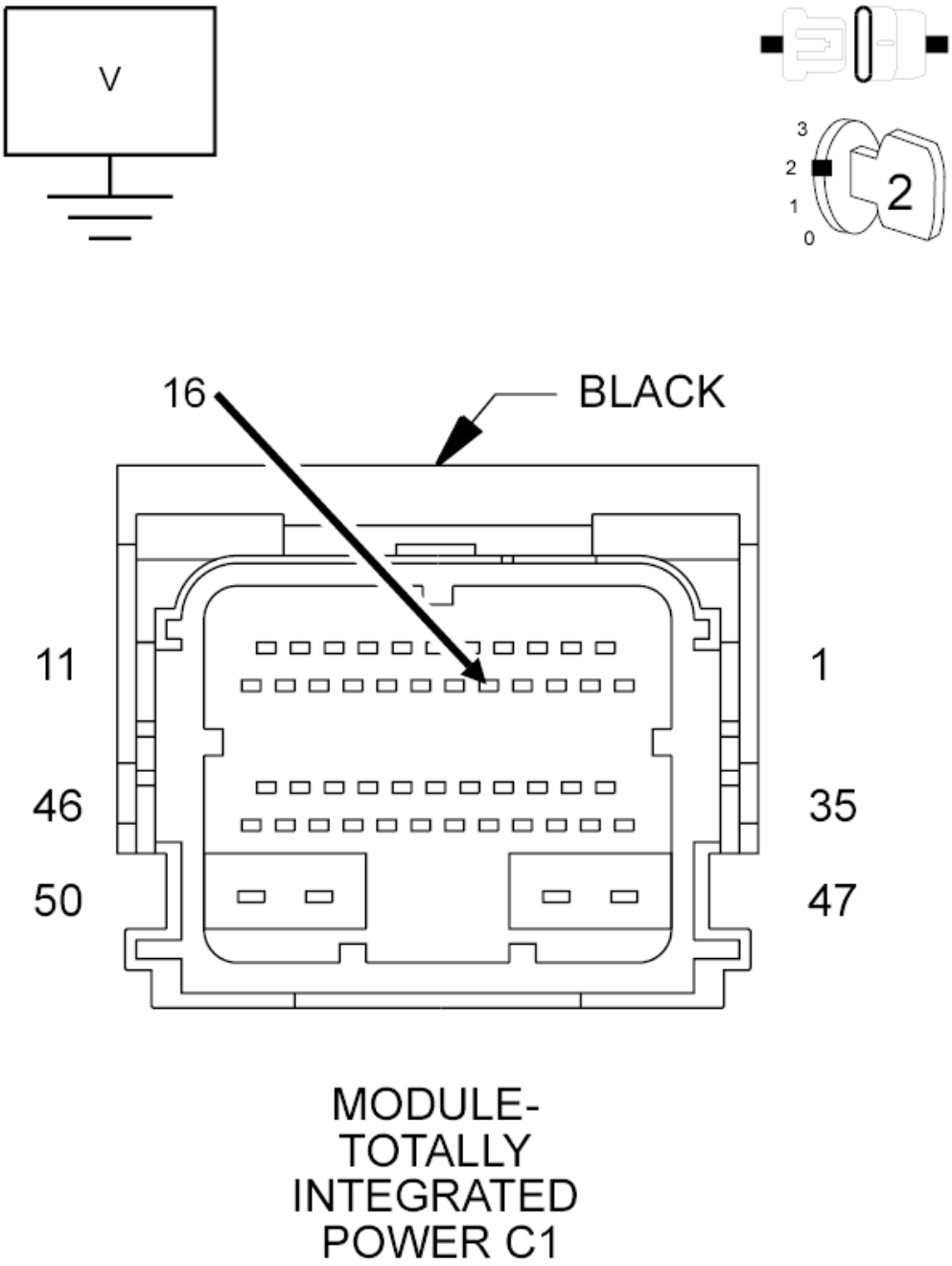

Fig. 101: Checking The A/C Compressor Clutch Control Circuit For A Short To Voltage
Courtesy of CHRYSLER GROUP, LLC

1. Turn the ignition off.
2. Disconnect the TIPM C1 harness connector.

NOTE: **Check connectors - Clean/repair as necessary.**

3. Turn the ignition on, engine not running.

4. Using a Voltmeter, measure the voltage on the (C13) A/C Compressor Clutch Control circuit at the TIPM C1 harness connector.

   Is there any voltage present?

   Yes

   - Repair the (C13) A/C Compressor Clutch Control circuit for a short to voltage.
   - Perform the POWERTRAIN VERIFICATION TEST - 6.7L. Refer to **POWERTRAIN VERIFICATION TEST - 6.7L** .

   No

   - Go To 2.

2. **CHECK THE POWERTRAIN CONTROL MODULE**

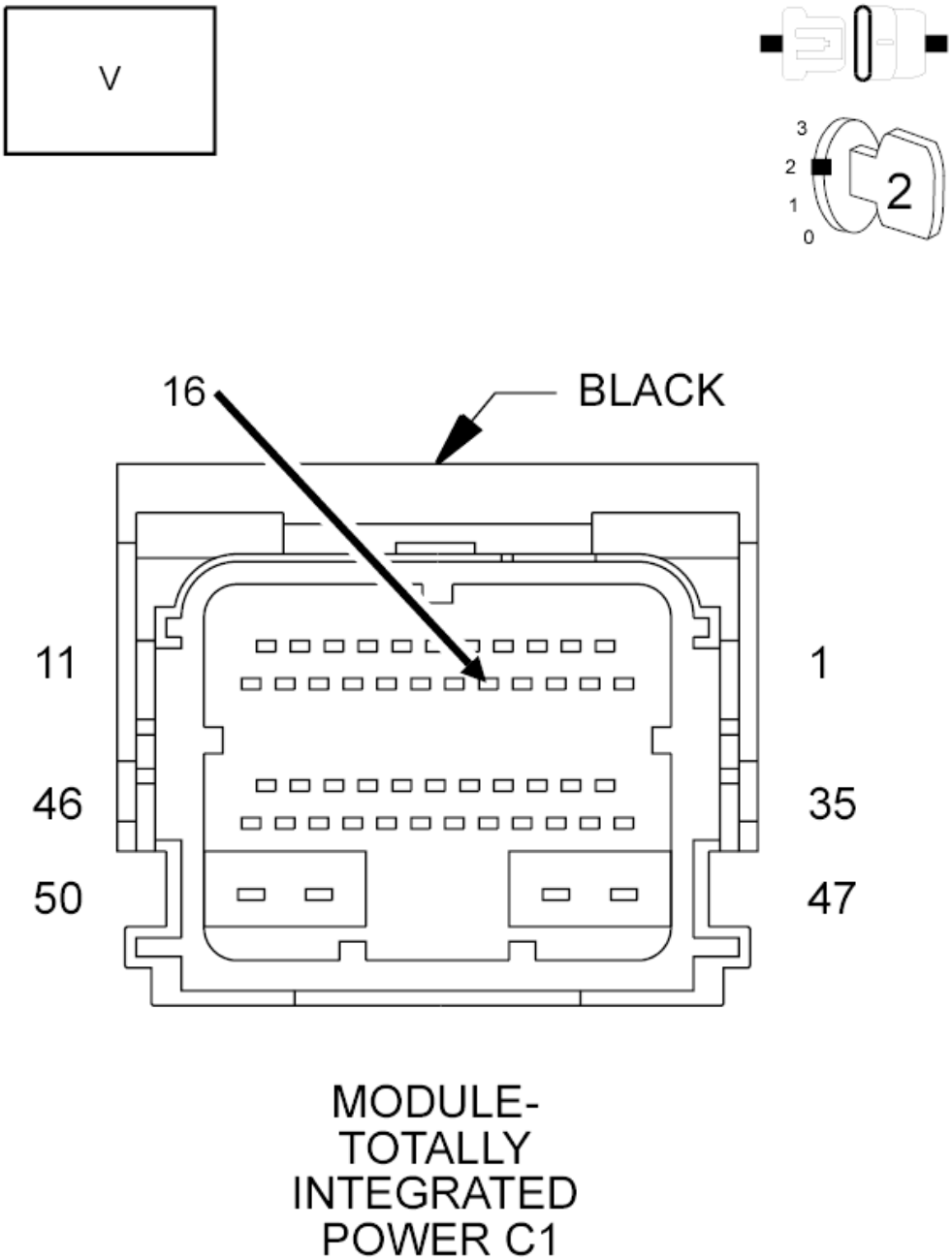

Fig. 102: Checking PCM/TIPM Control Circuits
Courtesy of CHRYSLER GROUP, LLC

1. Using a 12-Volt test light connected battery positive, probe the (C13) A/C Compressor Clutch Control circuit at the TIPM C1 harness connector while actuating the A/C Compressor Clutch with the scan tool.

NOTE: **The test light must illuminate brightly.**

2. Compare the brightness to that of a direct connection to the Battery.

   Does the test light illuminate brightly?

   Yes

   - Go To 3.

   No

   - Replace the Powertrain Control Module in accordance with the service information.
   - Perform the POWERTRAIN VERIFICATION TEST - 6.7L. Refer to **POWERTRAIN VERIFICATION TEST - 6.7L** .

3. **CHECK THE TOTALLY INTEGRATED POWER MODULE**
   1. Reconnect the TIPM C1 harness connector.
   2. Using a back probing tool back probe the (C3) A/C Compressor Clutch Output Control circuit in the TIPM C1 harness connector.
   3. Using a 12-Volt test light connected to ground, probe the (C3) A/C Compressor Clutch Output Control at the TIPM C1 harness connector while actuating the A/C Compressor Clutch circuit with the scan tool.

      NOTE: The test light must illuminate brightly.

   4. Compare the brightness to that of a direct connection to the battery.

      Does the test light illuminate brightly?

      Yes

      - Test complete.
      - Perform the POWERTRAIN VERIFICATION TEST - 6.7L. Refer to **POWERTRAIN VERIFICATION TEST - 6.7L** .

      No

      - Replace the Totally Integrated Power Module in accordance with the service information.
      - Perform the BODY VERIFICATION TEST. Refer to **STANDARD PROCEDURE** .

P064C-GLOW PLUG MODULE INTERNAL PERFORMANCE

For a complete wiring diagram, **refer to appropriate SYSTEM WIRING DIAGRAMS article** .

THEORY OF OPERATION

The glow plugs provide a hot spot in the combustion chamber, and are used to aid in cold starting. The Glow

Plug Control Module (GPCM) controls the glow plug temperature by regulating the current supplied to the glow plugs. The GPCM communicates with the ECM via the J1939 engine datalink, and the glow plug temperature and operation time is based on engine information supplied by the ECM. The GPCM monitors the status of each glow plug individually, and reports diagnostic failures to the ECM via the J1939 datalink. The glow plug system will be disabled when the fault is set. The ECM will turn OFF the MIL after 3 consecutive ignition cycles that the diagnostic runs and passes.

WHEN MONITORED:

Initially at key on and the Glow Plug Control Module is commanding the Glow Plugs on.

SET CONDITION:

The Glow Plug Control Module detects an issue with it's internal circuitry or hardware.

POSSIBLE CAUSES

Possible Causes
FUEL INJECTOR CIRCUIT OPEN/HIGH RESISTANCE
UPRATE KIT THAT MODIFIES INJECTOR ON TIME
POWERTRAIN CONTROL MODULE (PCM)

Always perform the Pre-Diagnostic Troubleshooting procedure before proceeding. Refer to PRE-DIAGNOSTIC TROUBLESHOOTING PROCEDURE - 6.7L .

DIAGNOSTIC TEST

1. **POWERTRAIN CONTROL MODULE CALIBRATION**
    1. Ignition on, engine not running.
    2. With the scan tool, check the PCM for the proper calibration level.

       Is the PCM calibration correct and at the latest version?

       Yes

       - Go To 2.

       No

       - Reprogram the Powertrain Control Module with the latest software version.
       - Perform the POWERTRAIN VERIFICATION TEST - 6.7L. Refer to **POWERTRAIN VERIFICATION TEST - 6.7L** .
2. **ACTIVE DTC**
    1. Turn the ignition off for at least 10 seconds.
    2. Turn the ignition on.

3. With the scan tool, clear DTCs.
4. With the scan tool, navigate to actuator tests and perform the Glow Plug Service Override Test twice without starting the engine.

   Did the DTC become active?

   Yes

   - Replace the Glow Plug Control Module.
   - Perform the POWERTRAIN VERIFICATION TEST - 6.7L. Refer to **POWERTRAIN VERIFICATION TEST - 6.7L** .

   No

   - Perform the INTERMITTENT CONDITION diagnostic procedure. Refer to **INTERMITTENT CONDITION - 6.7L** .

P0652-SENSOR REFERENCE VOLTAGE 2 LOW

For a complete wiring diagram, **refer to appropriate SYSTEM WIRING DIAGRAMS article** .

THEORY OF OPERATION

This sensor supply circuit provides a 5-Volt supply to: Camshaft Position Sensor, Inlet Air Temperature/Pressure Sensor, Exhaust Pressure Sensor, Fuel Pressure Sensor, Boost Pressure/CAC Temperature, EGR Valve, Fan Clutch Assembly, EGR Airflow Control Valve, and Crankcase Pressure Sensor. A MIL lamp will be lit immediately after this diagnostic runs and fails. The MIL lamp will turn off once the diagnostic runs and passes in four consecutive drive cycles.

WHEN MONITORED:

With the key on.

SET CONDITION:

Voltage detected on the 5-Volt supply circuit is below a calibrated value.

POSSIBLE CAUSES

Possible Causes
(F857) 5-VOLT SUPPLY CIRCUIT SHORTED TO GROUND
CAMSHAFT POSITION SENSOR
INLET AIR TEMPERATURE/PRESSURE SENSOR EXHAUST PRESSURE SENSOR FUEL RAIL PRESSURE SENSOR
BOOST PRESSURE/CAC TEMPERATURE SENSOR

EGR VALVE
FAN CLUTCH ASSEMBLY
CRANKCASE PRESSURE SENSOR EGR AIRFLOW CONTROL VALVE
POWERTRAIN CONTROL MODULE (PCM)

Always perform the Pre-Diagnostic Troubleshooting procedure before proceeding. Refer to PRE-DIAGNOSTIC TROUBLESHOOTING PROCEDURE - 6.7L .

DIAGNOSTIC TEST

1. **ACTIVE DIAGNOSTIC TROUBLE CODE (DTC)**
    1. Turn the ignition on.
    2. Using the scan tool, record all Freeze frame data.
    3. Using the scan tool, erase DTCs.
    4. Turn the ignition off for 75 seconds.
    5. Turn the ignition on.
    6. Using the scan tool, read DTCs.

    Did the DTC reset?

    Yes

    - Go To 2.

    No

    - Perform the INTERMITTENT CONDITION diagnostic procedure. Refer to **INTERMITTENT CONDITION - 6.7L** .
2. **CHECK THE CAMSHAFT POSITION SENSOR**

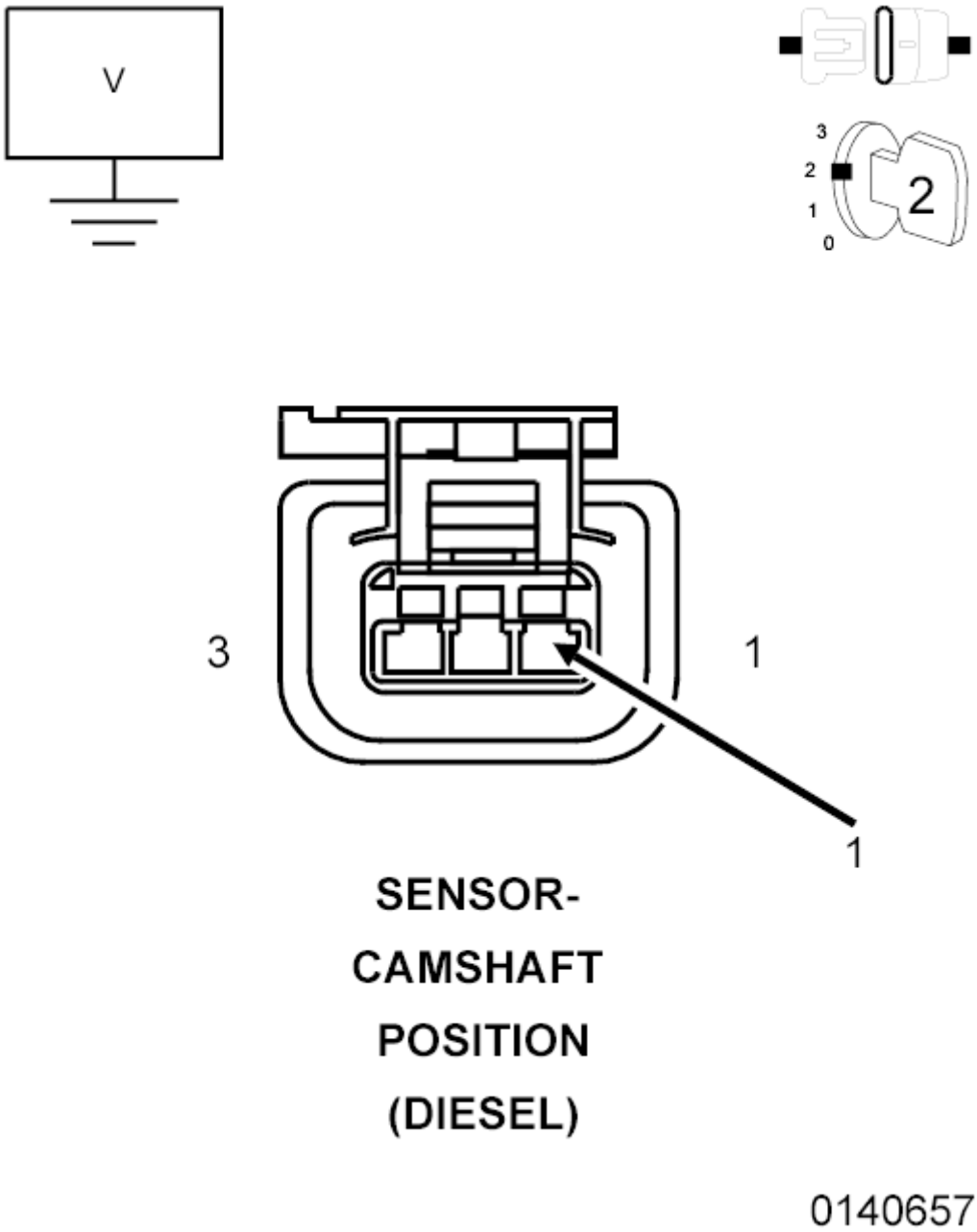

Fig. 103: Measuring Voltage Of 5-Volt Supply Circuit At Camshaft Position Sensor Harness Connector
Courtesy of CHRYSLER GROUP, LLC

1. Turn the ignition off.
2. Disconnect the Camshaft Position Sensor harness connector.
3. Turn the ignition on.
4. Measure the voltage on the (F857) 5-Volt Supply circuit at the Camshaft Position Sensor harness connector.

Is the voltage reading between 4.9 and 5.1 Volts?

Yes

- Replace the Camshaft Position Sensor in accordance with the Service Information.
- Perform the POWERTRAIN VERIFICATION TEST - 6.7L. Refer to **POWERTRAIN VERIFICATION TEST - 6.7L** .

No

- Go To 3.

3. **CHECK THE INLET AIR TEMPERATURE/PRESSURE SENSOR**

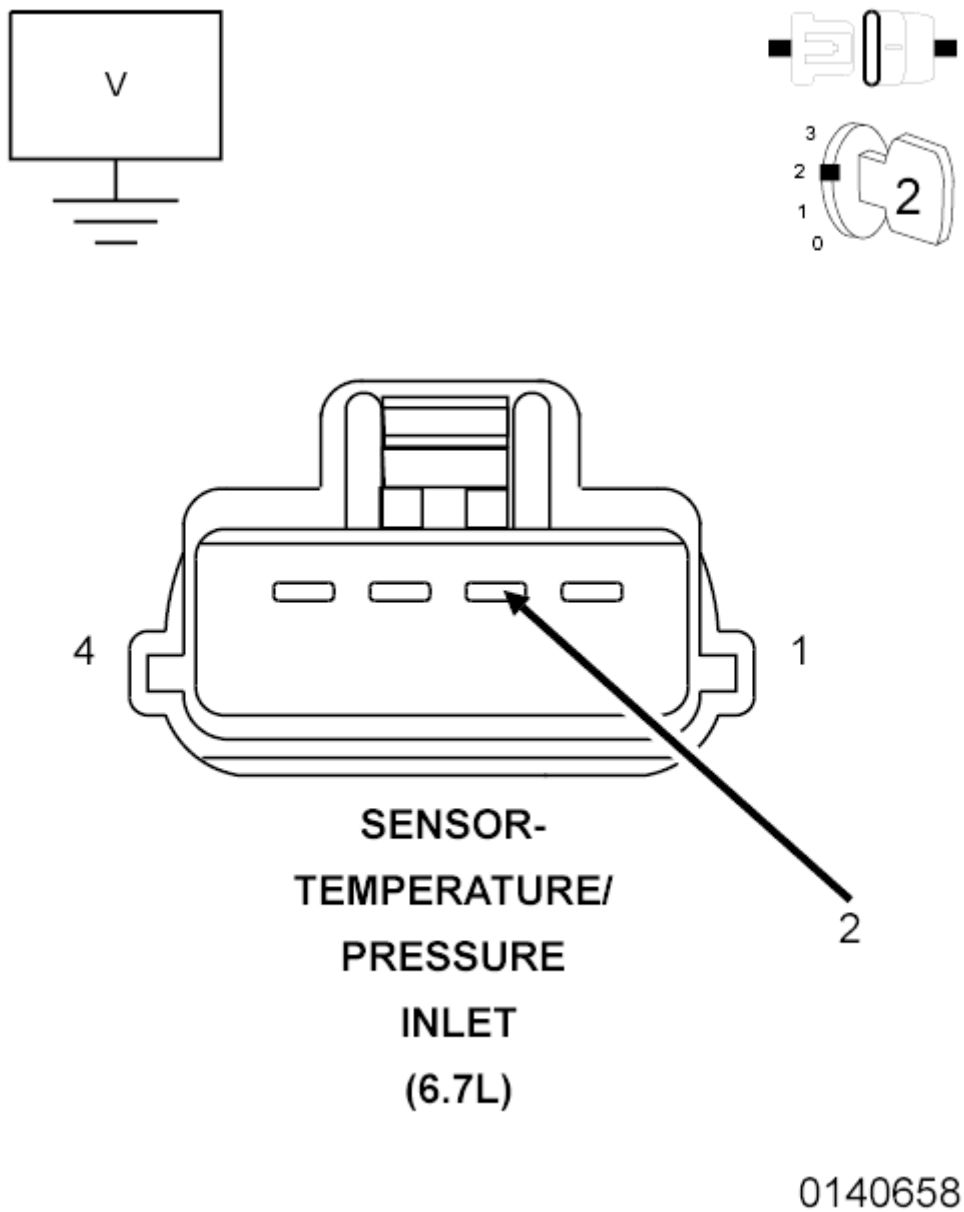

Fig. 104: Measuring Voltage Of 5-Volt Supply Circuit At Inlet Air Temperature/Pressure Sensor Harness Connector
Courtesy of CHRYSLER GROUP, LLC

1. Turn the ignition off.
2. Disconnect the Inlet Air Temperature/Pressure Sensor harness connector.
3. Turn the ignition on.
4. Measure the voltage on the (F857) 5-Volt Supply circuit at the Inlet Air Temperature/Pressure Sensor harness connector.

   Is the voltage reading between 4.9 and 5.1 Volts?

Yes

- Replace the Inlet Air Temperature/Pressure Sensor in accordance with the Service Information.
- Perform the POWERTRAIN VERIFICATION TEST - 6.7L. Refer to **POWERTRAIN VERIFICATION TEST - 6.7L** .

No

- Go To 4.

4. **CHECK THE EXHAUST PRESSURE SENSOR**

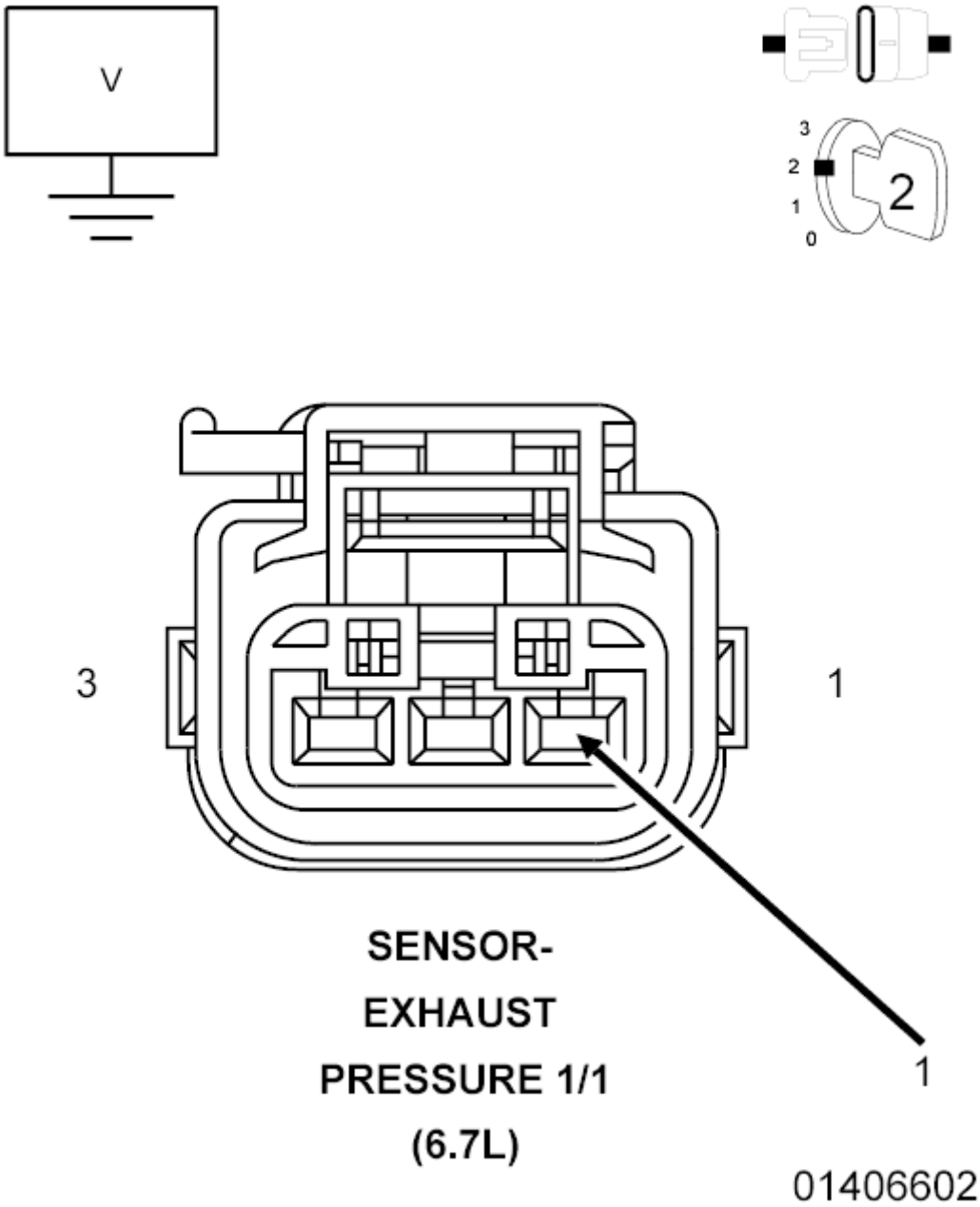

Fig. 105: Measuring Voltage Of 5-Volt Supply Circuit At Inlet Exhaust Pressure Sensor Harness Connector
Courtesy of CHRYSLER GROUP, LLC

1. Turn the ignition off.
2. Disconnect the Exhaust Pressure Sensor harness connector.
3. Turn the ignition on.
4. Measure the voltage on the (F857) 5-Volt Supply circuit at the Inlet Exhaust Pressure Sensor harness connector.

Is the voltage reading between 4.9 and 5.1 Volts?

Yes

- Replace the Exhaust Pressure Sensor in accordance with the Service Information.
- Perform the POWERTRAIN VERIFICATION TEST - 6.7L. Refer to **POWERTRAIN VERIFICATION TEST - 6.7L** .

No

- Go To 5.

5. **CHECK THE FUEL RAIL PRESSURE SENSOR**

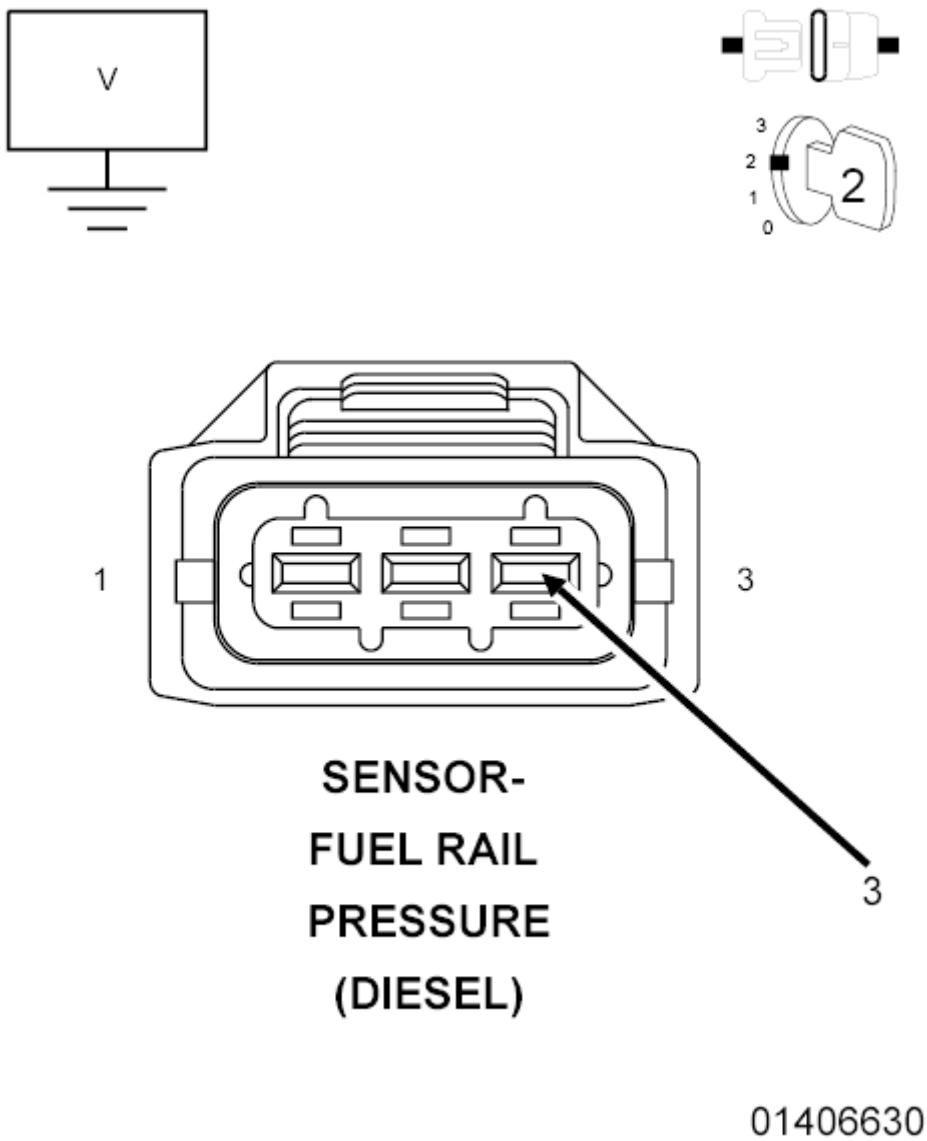

Fig. 106: Measuring Voltage Of 5-Volt Supply Circuit At Fuel Rail Pressure Sensor Harness Connector

Courtesy of CHRYSLER GROUP, LLC

1. Turn the ignition off.
2. Disconnect the Fuel Rail Pressure Sensor harness connector.
3. Turn the ignition on.
4. Measure the voltage on the (F857) 5-Volt Supply circuit at the Fuel Rail Pressure Sensor harness connector.

   Is the voltage reading between 4.9 and 5.1 Volts?

   Yes

   - Replace the Fuel Rail Pressure Sensor n accordance with the Service Information.
   - Perform the POWERTRAIN VERIFICATION TEST - 6.7L. Refer to **POWERTRAIN VERIFICATION TEST - 6.7L** .

   No

   - Go To 6.

6. **CHECK THE BOOST PRESSURE/CAC TEMPERATURE SENSOR**

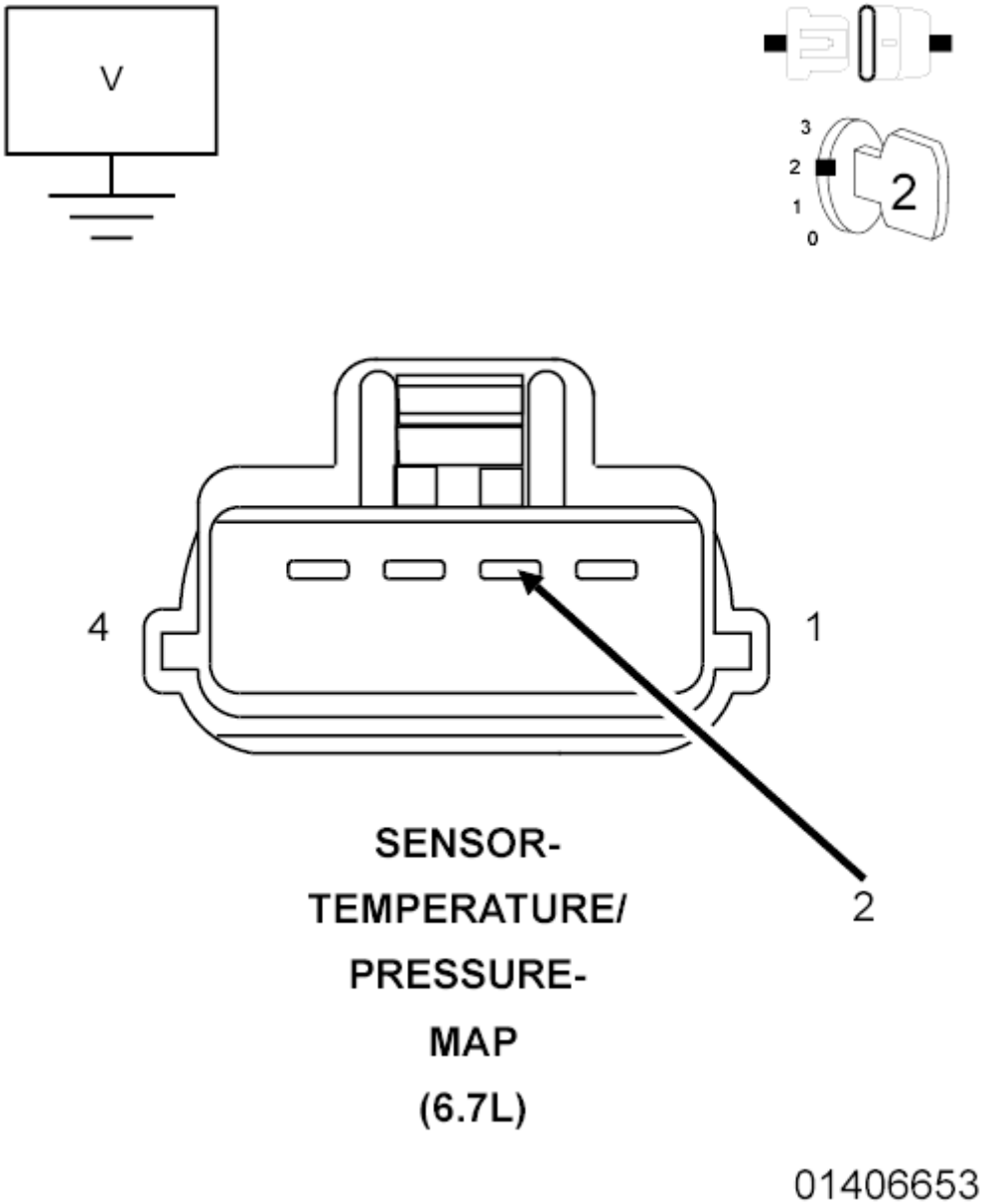

Fig. 107: Measuring Voltage Of 5-Volt Supply Circuit At Boost Pressure/CAC Temperature Sensor Harness Connector
Courtesy of CHRYSLER GROUP, LLC

1. Turn the ignition off.
2. Disconnect the Boost Pressure/CAC Temperature Sensor harness connector.
3. Turn the ignition on.
4. Measure the voltage on the (F857) 5-Volt Supply circuit at the Boost Pressure/CAC Temperature Sensor harness connector.

   Is the voltage reading between 4.9 and 5.1 Volts?

Yes

- Replace the Boost Pressure/CAC Temperature Sensor in accordance with the Service Information.
- Perform the POWERTRAIN VERIFICATION TEST - 6.7L. Refer to **POWERTRAIN VERIFICATION TEST - 6.7L** .

No

- Go To 7.

7. **CHECK THE EGR VALVE**

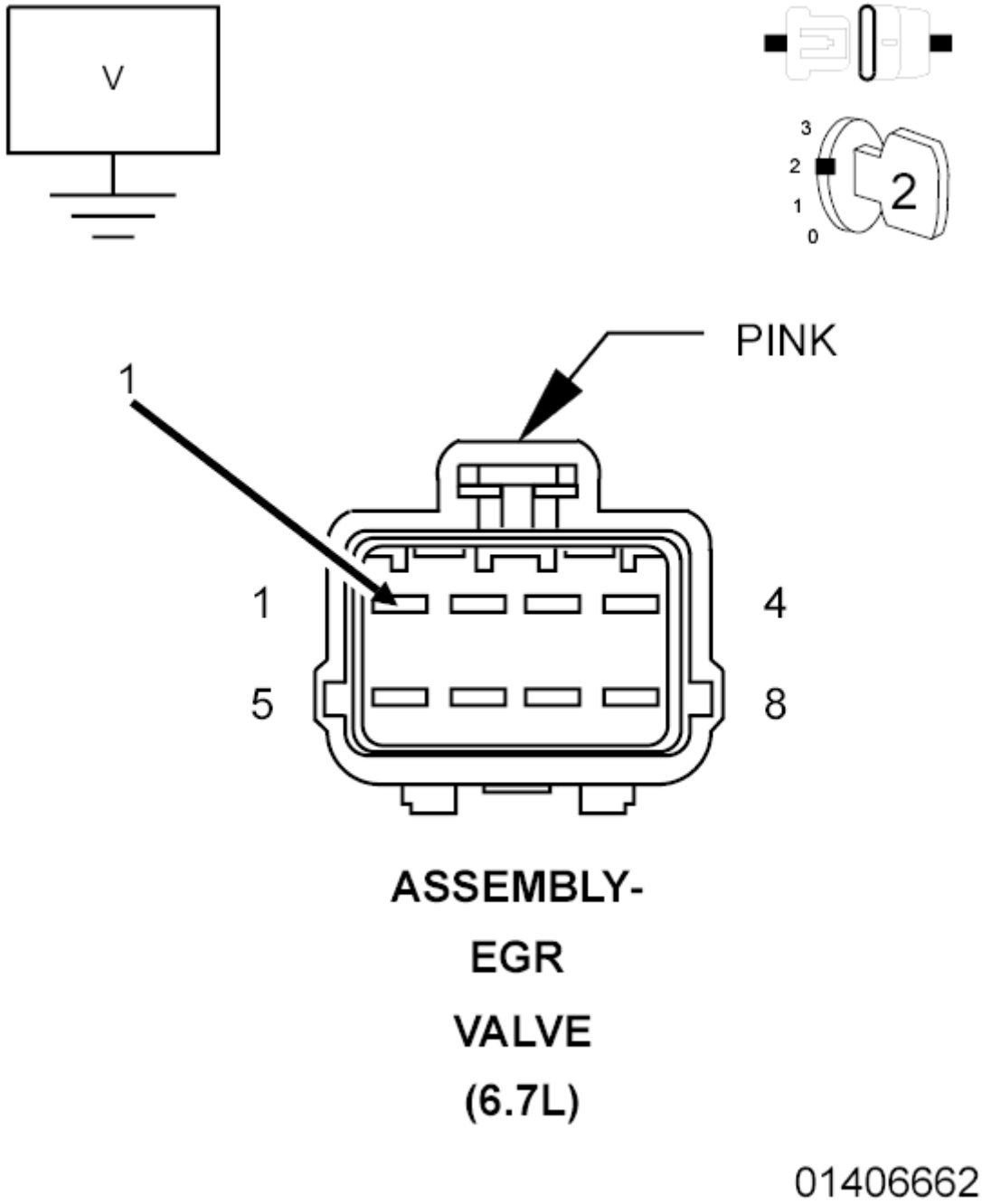

Fig. 108: Measuring Voltage Of 5-Volt Supply Circuit At EGR Valve Harness Connector
Courtesy of CHRYSLER GROUP, LLC

1. Turn the ignition off.
2. Disconnect the EGR Valve harness connector.
3. Turn the ignition on.
4. Measure the voltage on the (F857) 5-Volt Supply circuit at the EGR Valve harness connector.

   Is the voltage reading between 4.9 and 5.1 Volts?

Yes

- Replace the EGR Valve in accordance with the service information.
- Perform the POWERTRAIN VERIFICATION TEST - 6.7L. Refer to **POWERTRAIN VERIFICATION TEST - 6.7L** .

No

- Go To 8.

8. **CHECK THE FAN SPEED SENSOR**

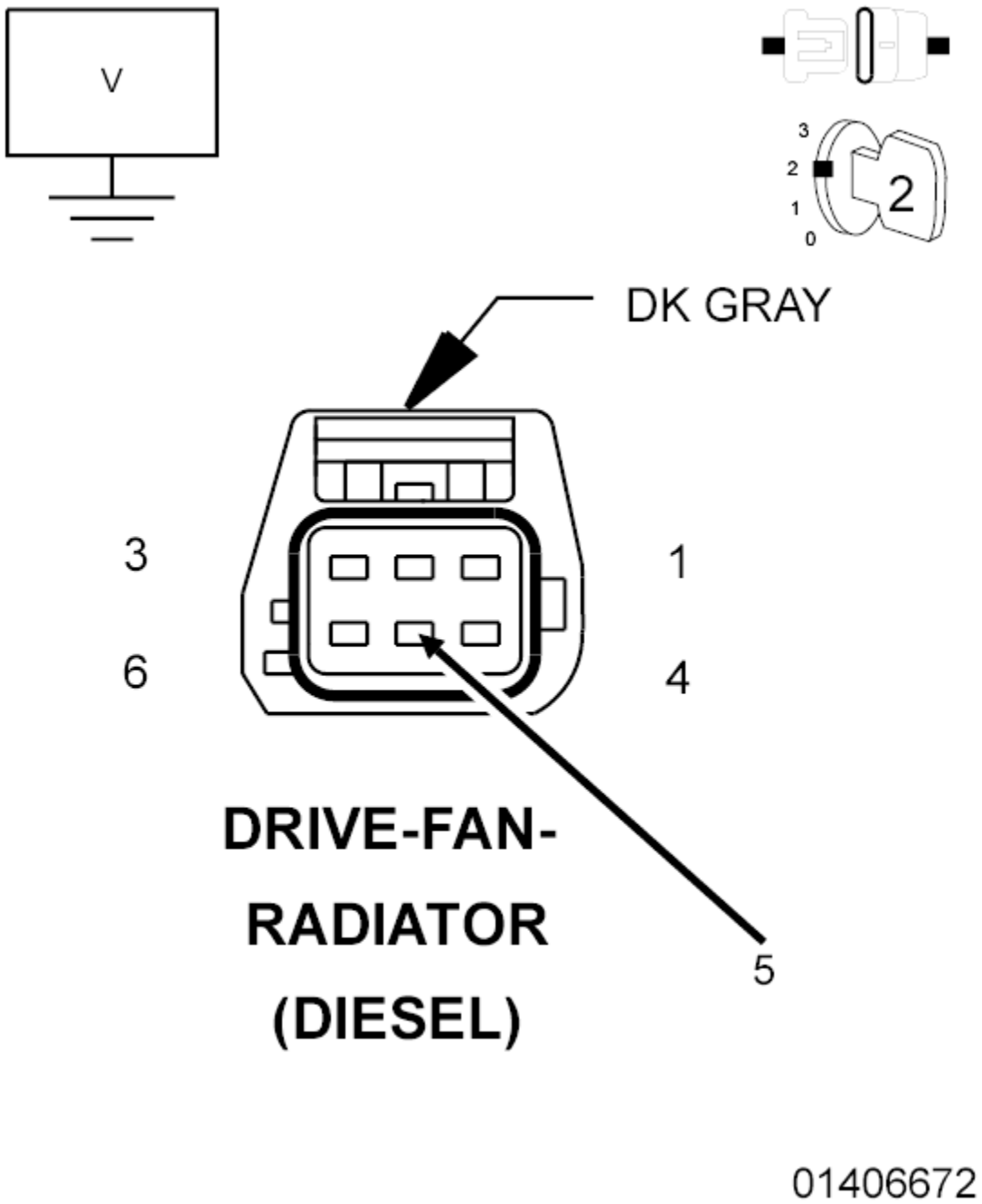

Fig. 109: Measuring Voltage Of 5-Volt Supply Circuit At Fan Clutch Assembly Harness Connector
Courtesy of CHRYSLER GROUP, LLC

1. Turn the ignition off.
2. Disconnect the Fan Clutch Assembly harness connector.
3. Turn the ignition on.
4. Measure the voltage on the (F857) 5-Volt Supply circuit at the Fan Clutch Assembly harness connector.

Is the voltage reading between 4.9 and 5.1 Volts?

Yes

- Replace the Fan Clutch Assembly in accordance with the service information.
- Perform the POWERTRAIN VERIFICATION TEST - 6.7L. Refer to **POWERTRAIN VERIFICATION TEST - 6.7L** .

No

- Go To 9.

9. **CHECK THE CRANKCASE PRESSURE SENSOR**

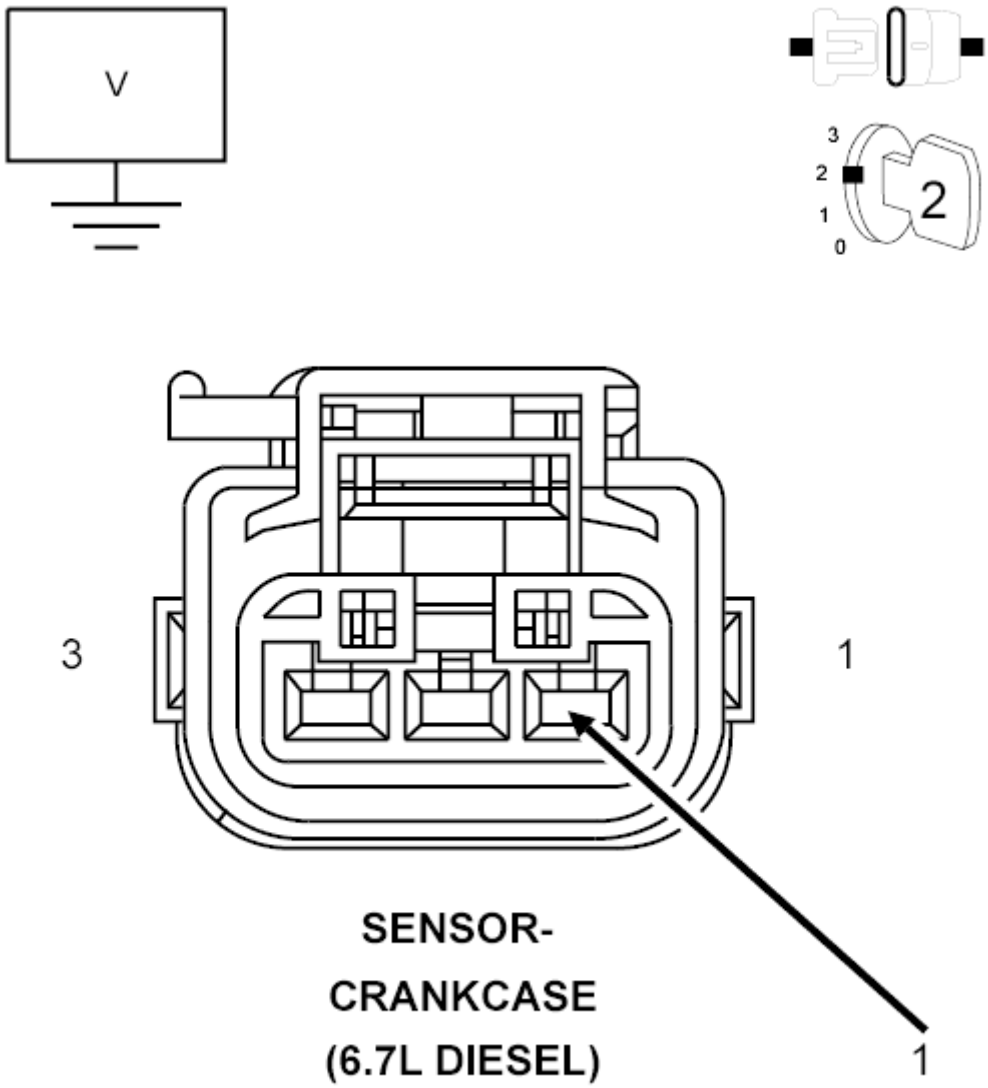

Fig. 110: Measuring Voltage Of 5-Volt Supply Circuit At Crankcase Pressure Sensor Harness Connector
Courtesy of CHRYSLER GROUP, LLC

1. Turn the ignition off.
2. Disconnect the Crankcase Pressure Sensor harness connector.
3. Turn the ignition on.
4. Measure the voltage on the (F857) 5-Volt Supply circuit at the Crankcase Pressure Sensor harness connector.

   Is the voltage reading between 4.9 and 5.1 Volts?

   Yes

   - Replace the Crankcase Pressure Sensor in accordance with the service information.
   - Perform the POWERTRAIN VERIFICATION TEST - 6.7L. Refer to **POWERTRAIN VERIFICATION TEST - 6.7L** .

   No

   - Go To 10.

10. **CHECK THE EGR AIRFLOW CONTROL VALVE**
    1. Turn the ignition off.
    2. Disconnect the EGR Airflow Control Valve harness connector.
    3. Turn the ignition on.
    4. Measure the voltage on the (F857) 5-Volt Supply circuit at the EGR Airflow Control Valve harness connector.

       Is the voltage reading between 4.9 and 5.1 Volts?

       Yes

       - Replace the EGR Airflow Control Valve in accordance with the service information.
       - Perform the POWERTRAIN VERIFICATION TEST - 6.7L. Refer to **POWERTRAIN VERIFICATION TEST - 6.7L** .

       No

       - Go To 11.

11. **CHECK THE (F857) 5-VOLT SUPPLY CIRCUIT FOR A SHORT TO GROUND**
    1. Disconnect the PCM C1 harness connector.
    2. Measure the resistance between ground and the (F857) 5-Volt Supply circuit at the PCM C1 harness connector.

Is the resistance below 10k Ohms?

Yes

- Repair the (F857) 5-Volt Supply circuit for a short to ground.
- Perform the POWERTRAIN VERIFICATION TEST - 6.7L. Refer to **POWERTRAIN VERIFICATION TEST - 6.7L** .

No

- Replace the Powertrain Control Module in accordance with the service information.
- Perform the POWERTRAIN VERIFICATION TEST - 6.7L. Refer to **POWERTRAIN VERIFICATION TEST - 6.7L** .

P0653-SENSOR REFERENCE VOLTAGE 2 HIGH

For a complete wiring diagram, **refer to appropriate SYSTEM WIRING DIAGRAMS article** .

THEORY OF OPERATION

This sensor supply circuit provides a 5-Volt supply to the Camshaft Position Sensor, Inlet Air Temperature/Pressure Sensor, Exhaust Pressure Sensor, Fuel Pressure Sensor, Boost Pressure/CAC Temperature, EGR Valve, Fan Clutch Assembly, and Crankcase Pressure Sensor. A MIL lamp will be lit immediately after this diagnostic runs and fails. The MIL lamp will turn off once the diagnostic runs and passes in four consecutive drive cycles.

WHEN MONITORED:

While the engine is running.

SET CONDITION:

Voltage detected on the 5-Volt Supply circuit is above a calibrated value.

POSSIBLE CAUSES

Possible Causes
(F857) 5-VOLT SUPPLY CIRCUIT SHORTED TO VOLTAGE POWERTRAIN CONTROL MODULE (PCM)

Always perform the Pre-Diagnostic Troubleshooting procedure before proceeding. Refer to PRE-DIAGNOSTIC TROUBLESHOOTING PROCEDURE - 6.7L .

DIAGNOSTIC TEST

1. **ACTIVE DTC**
    1. Turn the ignition on.

2. With the scan tool, record all Freeze frame data.
3. With the scan tool, erase DTCs.
4. Turn the ignition off for 75 seconds.
5. Turn the ignition on.
6. With the scan tool, read DTCs.

   Did the DTC reset?

   Yes

   - Go To 2.

   No

   - Perform the INTERMITTENT CONDITION diagnostic procedure. Refer to **INTERMITTENT CONDITION - 6.7L** .

2. **CHECK THE (F857) 5-VOLT SUPPLY FOR A SHORT TO VOLTAGE**
   1. Turn the ignition off.
   2. Disconnect the connectors for each component listed in the Theory Of Operation.
   3. Turn the ignition on.
   4. Measure the voltage of the (F857) 5-Volt Supply circuit at any of the disconnected component harness connectors.

      Is the voltage reading above 5.1 Volts?

      Yes

      - Repair the (F857) 5-Volt Supply circuit for a short to voltage.
      - Perform the POWERTRAIN VERIFICATION TEST - 6.7L. Refer to **POWERTRAIN VERIFICATION TEST - 6.7L** .

      No

      - Go To 3.

3. **CHECK THE (F857) 5-VOLT SUPPLY CIRCUIT FOR A SHORT TO ANOTHER CIRCUIT**
   1. Turn the ignition off.
   2. Disconnect the PCM C1 harness connector.

      NOTE: Check connectors - Clean/repair as necessary.

   3. Measure the resistance between the (F857) 5-Volt Supply circuit and all other circuits in the PCM C1 connector.

Is the resistance below 10k Ohms between the (F857) 5-Volt Supply circuit and any of the circuits?

Yes

- Repair the short to the circuit that measured below 10k Ohms.
- Perform the POWERTRAIN VERIFICATION TEST - 6.7L. Refer to **POWERTRAIN VERIFICATION TEST - 6.7L** .

No

- Replace the Powertrain Control Module in accordance with the service information.
- Perform the POWERTRAIN VERIFICATION TEST - 6.7L. Refer to **POWERTRAIN VERIFICATION TEST - 6.7L** .

P0658-ACTUATOR SUPPLY VOLTAGE "A" CIRCUIT LOW

For a complete wiring diagram, **refer to appropriate SYSTEM WIRING DIAGRAMS article** .

The EGR Valve receives 12.0 Volts from an internal driver in the Powertrain Control Module (PCM). The PCM monitors this internal power supply to the EGR Valve. The PCM illuminates the MIL Lamp immediately when the monitor runs and fails. The EGR Valve Driver is disabled and can no longer control the EGR Valve. The EGR Valve will default to the closed position. The PCM will turn off the MIL Lamp after the monitor runs and passes.

WHEN MONITORED:

With the key on or the engine running.

SET CONDITION:

The PCM detects low voltage at the EGR Valve driver circuit. The PCM is no longer able to control the EGR Valve.

POSSIBLE CAUSES

Possible Causes
LOW SYSTEM VOLTAGE
POWERTRAIN CONTROL MODULE (PCM)

Always perform the Pre-Diagnostic Troubleshooting procedure before proceeding. Refer to PRE-DIAGNOSTIC TROUBLESHOOTING PROCEDURE - 6.7L .

DIAGNOSTIC TEST

1. **CHECK FOR RELATED DTCS**
    1. Start the engine and allow it to idle for one minute.

2. With the scan tool, read all DTCs.

   Are there any Low Voltage DTCs present?

   Yes

   - Go To 2.

   No

   - Replace and program the Powertrain Control Module in accordance with the service information. Refer to **MODULE, POWERTRAIN CONTROL, 6.7L DIESEL, REMOVAL** and **PCM/ECM / TCM PROGRAMMING** .
   - Perform the POWERTRAIN VERIFICATION TEST - 6.7L. Refer to **POWERTRAIN VERIFICATION TEST - 6.7L** .

2. **VERIFY REPAIR**
   1. Repair the cause of the low battery voltage DTCs.
   2. Turn the ignition on.
   3. With the scan tool, erase DTCs.
   4. Start the engine and allow it to idle for one minute.
   5. With the scan tool, read all DTCs.

      Did the DTC return?

      Yes

      - Replace and program the Powertrain Control Module in accordance with the service information. Refer to **MODULE, POWERTRAIN CONTROL, 6.7L DIESEL, REMOVAL** and **PCM/ECM / TCM PROGRAMMING** .
      - Perform the POWERTRAIN VERIFICATION TEST - 6.7L. Refer to **POWERTRAIN VERIFICATION TEST - 6.7L** .

      No

      - Repair complete.
      - Perform the POWERTRAIN VERIFICATION TEST - 6.7L. Refer to **POWERTRAIN VERIFICATION TEST - 6.7L** .

P0686-POWER ENABLE CONTROL CIRCUIT LOW

For a complete wiring diagram, **refer to appropriate SYSTEM WIRING DIAGRAMS article** .

THEORY OF OPERATION

The Smart Power Relay supplies 12 Volts to the Mass Airflow Sensor, the Exhaust Gas Recirculation (EGR)

Airflow Control Valve and the Variable Geometry Turbocharger. The Smart Power Relay Control circuit is a low side driver controlled by the Powertrain Control Module (PCM). The Smart Power Relay is powered up at key on, and remains powered until just after key off. The power supply to the Smart Power Relay is wired directly from the Totally Integrated Power Module (TIPM). The PCM will illuminate the Malfunction Indicator Lamp (MIL) and disable the regeneration mode immediately after this diagnostic runs and fails. During this time there will likely also be voltage supply faults for the Mass Airflow Sensor, the EGR Airflow Control Valve and the Variable Geometry Turbocharger. The PCM will turn off the MIL once the diagnostic runs and passes in four consecutive drive cycles.

WHEN MONITORED:

Key on, Smart Power Relay commanded on.

SET CONDITION:

The Smart Power Relay is commanded on by the PCM, and feedback voltage is reading high.

POSSIBLE CAUSES

Possible Causes
SMART POWER RELAY
POWERTRAIN CONTROL MODULE (PCM)

Always perform the Pre-Diagnostic Troubleshooting procedure before proceeding. Refer to PRE-DIAGNOSTIC TROUBLESHOOTING PROCEDURE - 6.7L .

DIAGNOSTIC TEST

1. **ACTIVE DTC**
    1. Ignition on, engine not running.
    2. With the scan tool, read DTCs.

       Is DTC active?

       Yes

       - Go To 2.

       No

       - Perform the INTERMITTENT CONDITION diagnostic procedure. Refer to **INTERMITTENT CONDITION - 6.7L** .
2. **POWERTRAIN CONTROL MODULE**
    1. Replace the Smart Power Relay in accordance with the Service Information.
    2. Turn the ignition on.
    3. With the scan tool, erase DTCs.

4. Turn the ignition off for 75 seconds.
5. Turn the ignition on.
6. With the scan tool, read DTCs.

Did the DTC reset?

Yes

- Replace Powertrain Control Module in accordance with the Service Information.
- Perform the POWERTRAIN VERIFICATION TEST - 6.7L. Refer to **POWERTRAIN VERIFICATION TEST - 6.7L** .

No

- Repair complete.
- Perform the POWERTRAIN VERIFICATION TEST - 6.7L. Refer to **POWERTRAIN VERIFICATION TEST - 6.7L** .

P0691-COOLING FAN 1 CONTROL CIRCUIT LOW

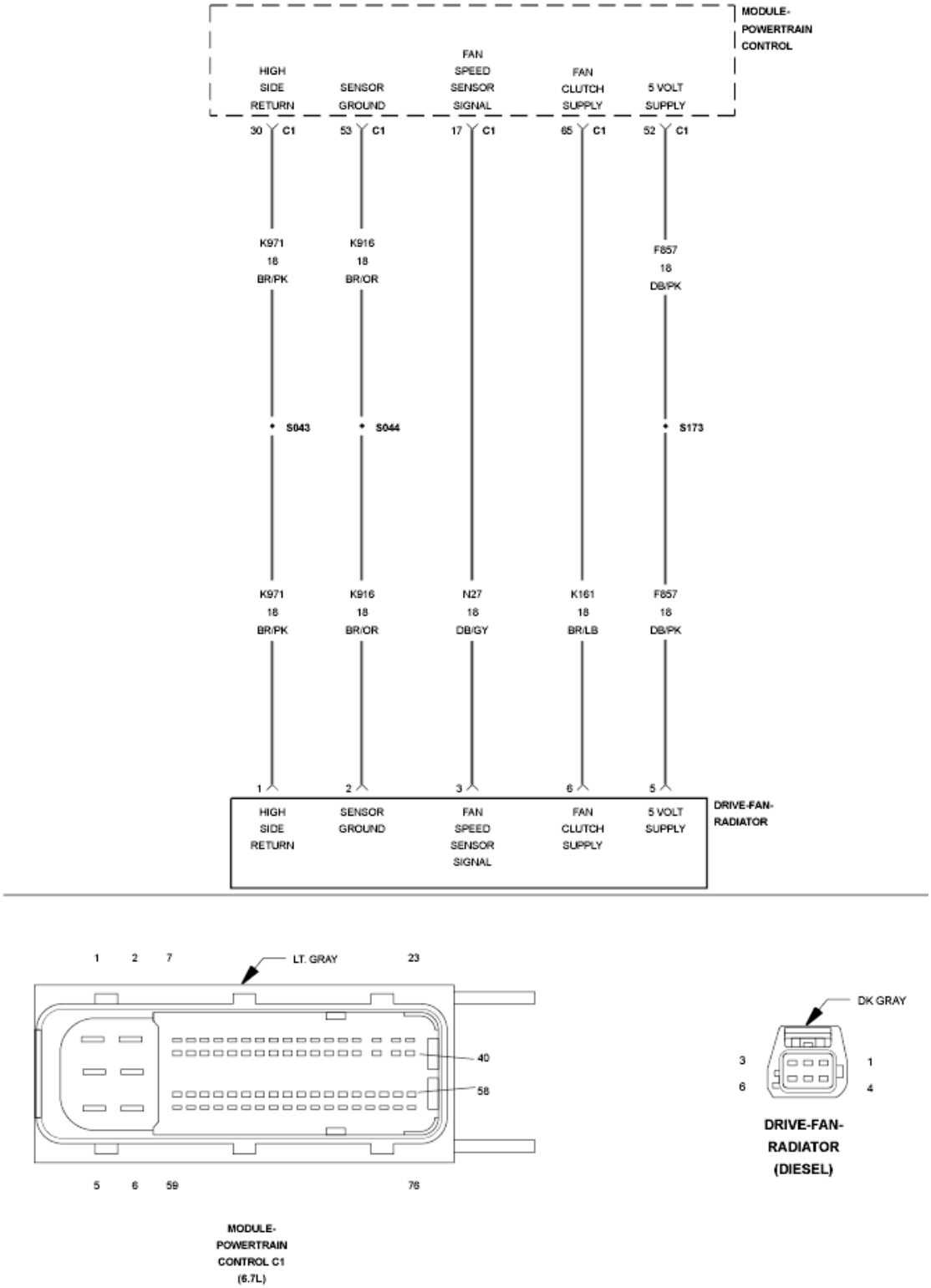

Fig. 111: Radiator Drive Fan Circuit Schematic
Courtesy of CHRYSLER GROUP, LLC

For a complete wiring diagram, **refer to appropriate SYSTEM WIRING DIAGRAMS article** .

THEORY OF OPERATION

The cooling fan is a hydro-electric controlled device that is engine mounted. The Powertrain Control Module (PCM) monitors various sensors to control fan speed. The cooling fan provides temperature control for engine coolant, engine charged air, A/C Freon and automatic transmission fluid. Fan speed increases as cooling requirements increase. Since the fan is mounted to the engine, fan speed is related to engine speed (RPM). The PCM uses a Pulse Width Modulated (PWM) driver to control the amount of fluid to the clutch fan. When the fan is fully engaged it is capable of speeds about 10% greater than engine speed. The fan will rotate anytime the engine is running, even when the PCM is not sending a PWM signal.

WHEN MONITORED:

When the ignition is on.

SET CONDITION:

When the control coil is electrically shorted or open.

POSSIBLE CAUSES

Possible Causes
(K161) CLUTCH FAN SUPPLY CIRCUIT SHORTED TO GROUND
(K161) CLUTCH FAN SUPPLY CIRCUIT SHORTED TO THE (K971) ACTUATOR GROUND CIRCUIT
RADIATOR FAN
POWERTRAIN CONTROL MODULE (PCM)

Always perform the Pre-Diagnostic Troubleshooting procedure before proceeding. Refer to PRE-DIAGNOSTIC TROUBLESHOOTING PROCEDURE - 6.7L .

DIAGNOSTIC TEST

1. **ACTIVE DTC**
    1. Turn the ignition on.
    2. Using the scan tool, erase DTCs.
    3. Turn the ignition off for 75 seconds.
    4. Turn the ignition on.
    5. Using the scan tool, actuate the Radiator Clutch Fan control on.
    6. Using the scan tool, read DTCs.

    Did the DTC reset?

    Yes

    - Go To 2.

No

- Perform the INTERMITTENT DTC diagnostic procedure. Refer to **INTERMITTENT CONDITION - 6.7L** .

2. **CHECK THE (K161) CLUTCH FAN SUPPLY CIRCUIT FOR A SHORT TO GROUND**

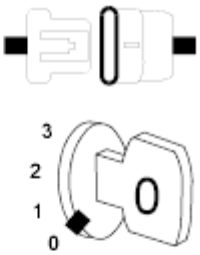

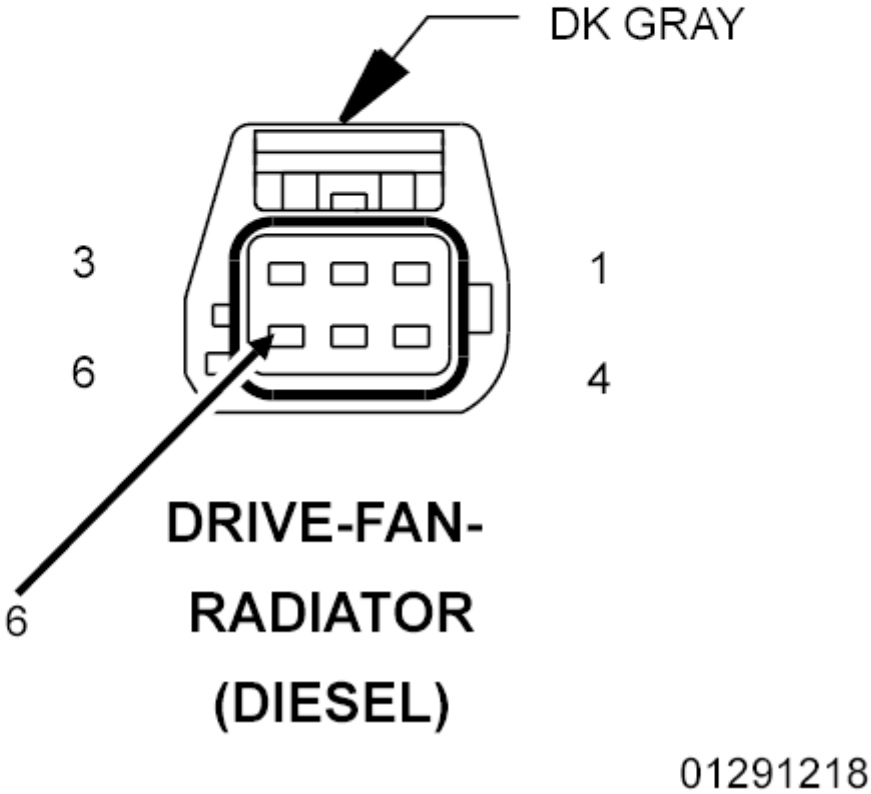

Fig. 112: Radiator Fan Drive Connector Pin ID
Courtesy of CHRYSLER GROUP, LLC

1. Stop actuation of the Radiator Clutch Fan.
2. Disconnect the Radiator Clutch Fan harness connector.

3. Disconnect the PCM C1 harness connector.
4. Measure the resistance between ground and the (K161) Clutch Fan Supply circuit at the Radiator Clutch Fan harness connector.

   Is the resistance below 10k Ohms?

   Yes

   - Repair the (K161) Clutch Fan Supply circuit for a short to ground.
   - Perform the POWERTRAIN VERIFICATION TEST - 6.7L. Refer to **POWERTRAIN VERIFICATION TEST - 6.7L** .

   No

   - Go To 3.

3. **CHECK FOR THE (K161) CLUTCH FAN SUPPLY CIRCUIT SHORTED TO THE (K971) ACTUATOR GROUND CIRCUIT**

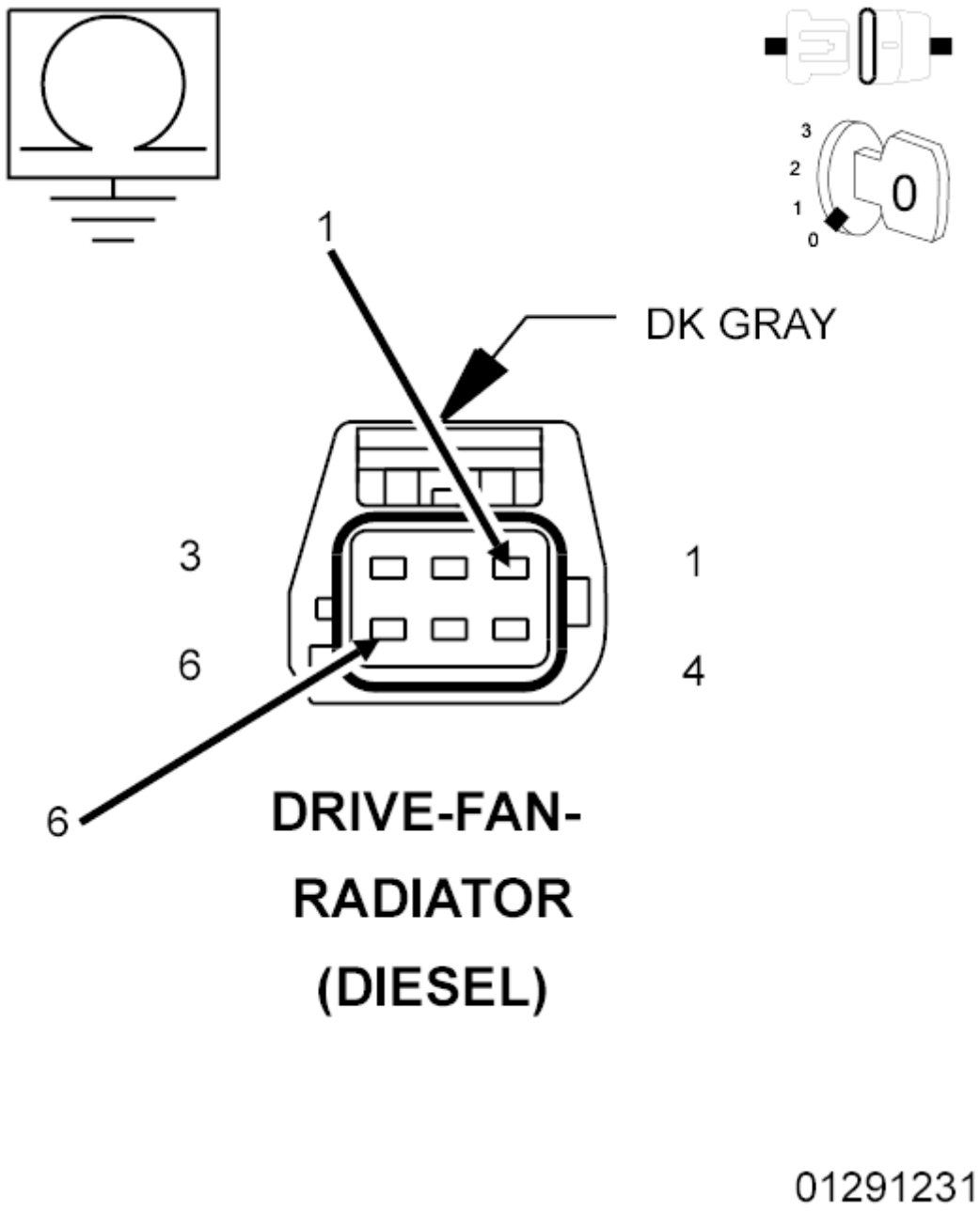

Fig. 113: Radiator Fan Drive Connector Pin ID
Courtesy of CHRYSLER GROUP, LLC

1. Measure the resistance between the (K161) Clutch Fan Supply circuit and the (K971) Actuator Ground circuit at the Radiator Clutch Fan harness connector.

   Is the resistance below 10k Ohms?

   Yes

   - Repair the short between the (K161) Clutch Fan Supply circuit and the (K971) Actuator

Ground circuit.

- Perform the POWERTRAIN VERIFICATION TEST - 6.7L. Refer to **POWERTRAIN VERIFICATION TEST - 6.7L** .

No

- Go To 4.

4. **CHECK THE RADIATOR CLUTCH FAN**
   1. Measure the resistance between ground and the (K161) Clutch Fan Supply circuit at the Radiator Clutch Fan.

      Is the resistance below 10k Ohms?

      Yes

      - Replace the Powertrain Control Module (PCM) in accordance with the Service Information.
      - Perform the POWERTRAIN VERIFICATION TEST - 6.7L. Refer to **POWERTRAIN VERIFICATION TEST - 6.7L** .

      No

      - Replace the Radiator Clutch Fan in accordance with the Service Information.
      - Perform the POWERTRAIN VERIFICATION TEST - 6.7L. Refer to **POWERTRAIN VERIFICATION TEST - 6.7L** .

P0692-COOLING FAN 1 CONTROL CIRCUIT HIGH

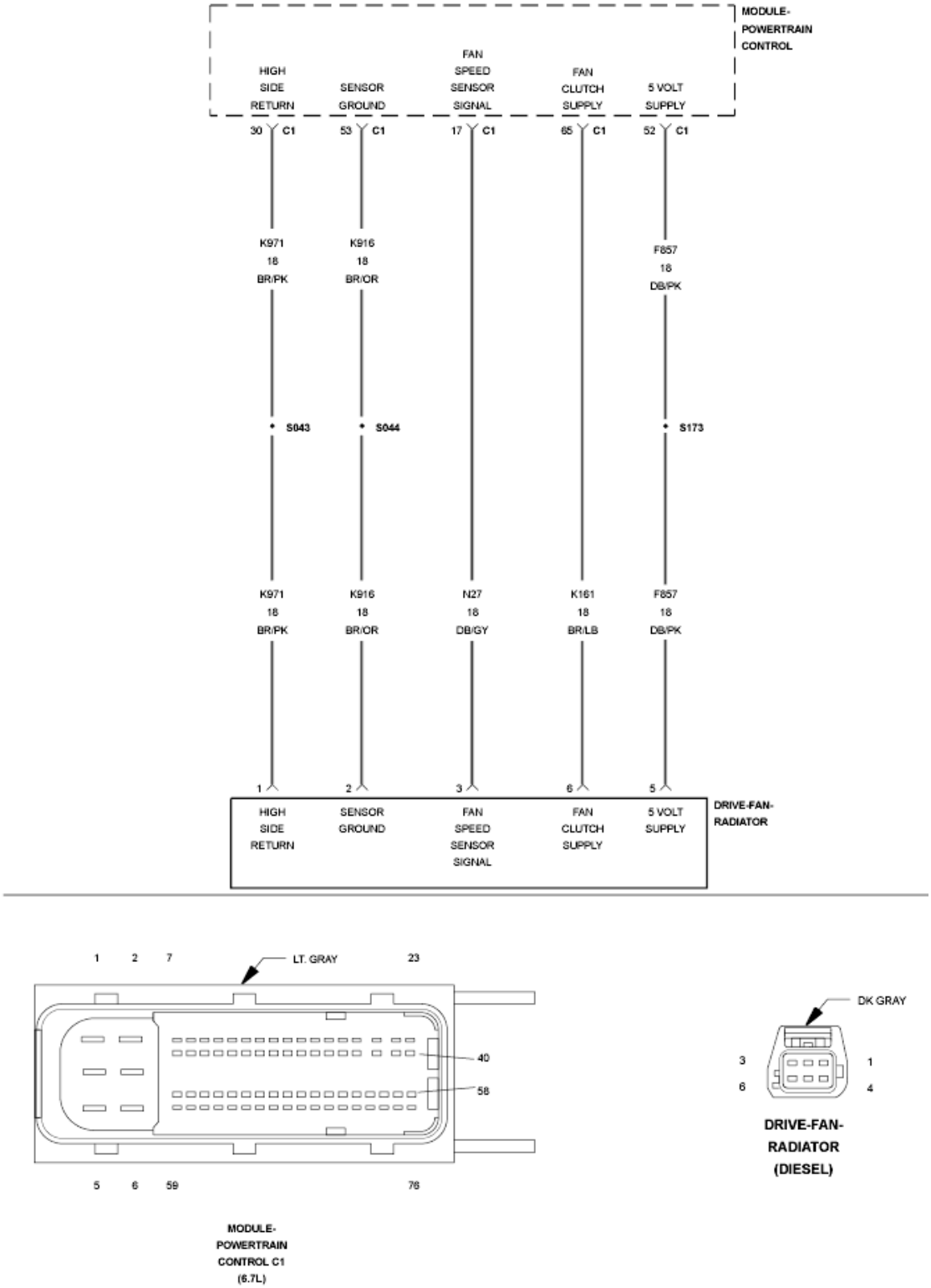

Fig. 114: Radiator Drive Fan Circuit Schematic
Courtesy of CHRYSLER GROUP, LLC

For a complete wiring diagram, **refer to appropriate SYSTEM WIRING DIAGRAMS article** .

THEORY OF OPERATION

The cooling fan is a hydro-electric controlled device that is engine mounted. The Powertrain Control Module (PCM) monitors various sensors to control fan speed. The cooling fan provides temperature control for engine coolant, engine charged air, A/C Freon and automatic transmission fluid. Fan speed increases as cooling requirements increase. Since the fan is mounted to the engine, fan speed is related to engine speed (RPM). The PCM uses a Pulse Width Modulated (PWM) driver to control the amount of fluid to the clutch fan. When the fan is fully engaged it is capable of speeds about 10% greater than engine speed. The fan will rotate anytime the engine is running, even when the PCM is not sending a PWM signal.

WHEN MONITORED:

With the ignition on.

SET CONDITION:

The Smart Power Relay is commanded on by the PCM, and feedback voltage is reading high.

POSSIBLE CAUSES

Possible Causes
(K161) CLUTCH FAN SUPPLY CIRCUIT SHORTED TO VOLTAGE
(K161) CLUTCH FAN SUPPLY CIRCUIT OPEN/HIGH RESISTANCE
(K971) ACTUATOR GROUND CIRCUIT OPEN/HIGH RESISTANCE
RADIATOR FAN
POWERTRAIN CONTROL MODULE (PCM)

Always perform the Pre-Diagnostic Troubleshooting procedure before proceeding. Refer to PRE-DIAGNOSTIC TROUBLESHOOTING PROCEDURE - 6.7L .

DIAGNOSTIC TEST

1. **ACTIVE DTC**
    1. Turn the ignition on.
    2. Using the scan tool, record all Freeze frame data.
    3. Using the scan tool, erase DTCs.
    4. Turn the ignition off for 75 seconds.
    5. Turn the ignition on.
    6. Using the scan tool, actuate the Radiator Clutch Fan control on.
    7. Using the scan tool, read DTCs.

    Did the DTC reset?

    Yes

- Go To 2.

No

- Perform the INTERMITTENT CONDITION diagnostic procedure. Refer to **INTERMITTENT CONDITION - 6.7L** .

2. **CHECK THE (K161) CLUTCH FAN SUPPLY CIRCUIT FOR A SHORT TO VOLTAGE**
   1. Stop actuation of the Radiator Clutch Fan.
   2. Turn the ignition off.
   3. Disconnect the Radiator Clutch Fan harness connector.

      NOTE: Check connectors - Clean/repair as necessary.

   4. Turn the ignition on.
   5. Measure the voltage on the (K161) Clutch Fan Supply circuit at the Radiator Clutch Fan harness connector.

      Is the voltage reading near battery voltage?

      Yes

      - Repair the (K161) Clutch Fan Supply circuit for a short to voltage.
      - Perform the POWERTRAIN VERIFICATION TEST - 6.7L. Refer to **POWERTRAIN VERIFICATION TEST - 6.7L** .

      No

      - Go To 3.

3. **CHECK THE (K161) CLUTCH FAN SUPPLY CIRCUIT FOR AN OPEN/HIGH RESISTANCE**
   1. Turn the ignition off.
   2. Disconnect the PCM C1 harness connector.

      NOTE: Check connectors - Clean/repair as necessary.

   3. Measure the resistance of the (K161) Clutch Fan Supply circuit between the PCM C1 harness connector and the Radiator Clutch Fan harness connector.

      Is the resistance below 5.0 Ohms?

      Yes

      - Go To 4.

      No

- Repair the (K161) Clutch Fan Supply circuit for an open or high resistance.
- Perform the POWERTRAIN VERIFICATION TEST - 6.7L. Refer to **POWERTRAIN VERIFICATION TEST - 6.7L** .

4. **CHECK THE (K971) ACTUATOR GROUND CIRCUIT FOR AN OPEN/HIGH RESISTANCE**
   1. Measure the resistance of the (K971) Actuator Ground circuit between the PCM C1 harness connector and the Radiator Fan harness connector.

      Is the resistance below 5.0 Ohms?

      Yes

      - Go To 5.

      No

      - Repair the (K971) Actuator Ground circuit for an open or high resistance.
      - Perform the POWERTRAIN VERIFICATION TEST - 6.7L. Refer to **POWERTRAIN VERIFICATION TEST - 6.7L** .
5. **CHECK THE RADIATOR CLUTCH FAN**
   1. Measure the resistance between the (K161) Clutch Fan Supply circuit and the (K971) Actuator Ground circuit through the Radiator Clutch Fan.

      Is the resistance between 6.0 and 10.0 Ohms?

      Yes

      - Replace the Powertrain Control Module in accordance with the Service Information.
      - Perform the POWERTRAIN VERIFICATION TEST - 6.7L. Refer to **POWERTRAIN VERIFICATION TEST - 6.7L** .

      No

      - Replace the Radiator Clutch Fan in accordance with the Service Information.
      - Perform the POWERTRAIN VERIFICATION TEST - 6.7L. Refer to **POWERTRAIN VERIFICATION TEST - 6.7L** .

P0698-SENSOR REFERENCE VOLTAGE 3 CIRCUIT LOW

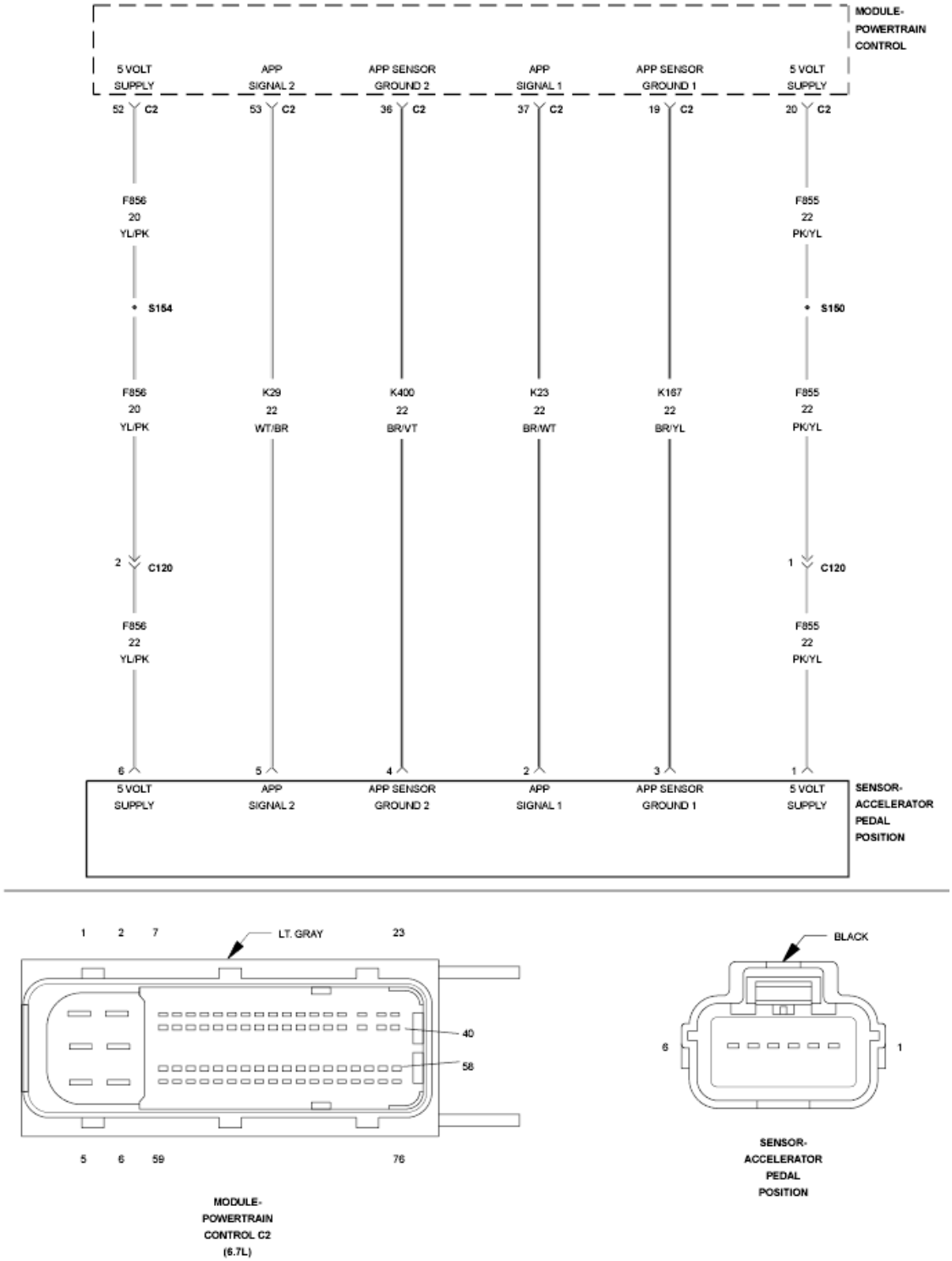

Fig. 115: Accelerator Pedal Position Sensor Circuit Schematic
Courtesy of CHRYSLER GROUP, LLC

For a complete wiring diagram, **refer to appropriate SYSTEM WIRING DIAGRAMS article** .

THEORY OF OPERATION

This sensor supply circuit provides a 5-Volt supply to the Accelerator Pedal Position 1 Sensor (APPS). The Powertrain Control Module (PCM) illuminates the MIL lamp immediately after the diagnostic runs and fails. The ETC lamp will also flash. During this time the customer will be in a limp home mode. The PCM will turn off the MIL lamp after the diagnostic runs and passes in four consecutive drive cycles.

WHEN MONITORED:

With the ignition on, PCM powered.

SET CONDITION:

Low voltage detected at the (F855) 5-Volt Supply circuit.

POSSIBLE CAUSES

Possible Causes
APPS SENSOR 1
(F855) 5-VOLT SUPPLY CIRCUIT SHORTED TO GROUND
(F855) 5-VOLT SUPPLY CIRCUIT SHORTED TO ANOTHER CIRCUIT
POWERTRAIN CONTROL MODULE (PCM)

Always perform the Pre-Diagnostic Troubleshooting procedure before proceeding. Refer to PRE-DIAGNOSTIC TROUBLESHOOTING PROCEDURE - 6.7L .

DIAGNOSTIC TEST

1. **ACTIVE DTC**
    1. Turn the ignition on.
    2. With the scan tool, record all Freeze frame data.
    3. With the scan tool, erase DTCs.
    4. Turn the ignition off for 75 seconds.
    5. Turn the ignition on.
    6. With the scan tool, read DTCs.

    Did the DTC reset?

    Yes

    - Go To 2.

    No

    - Perform the INTERMITTENT CONDITION diagnostic procedure. Refer to

INTERMITTENT CONDITION - 6.7L .

2. **CHECK THE APP SENSOR 1**

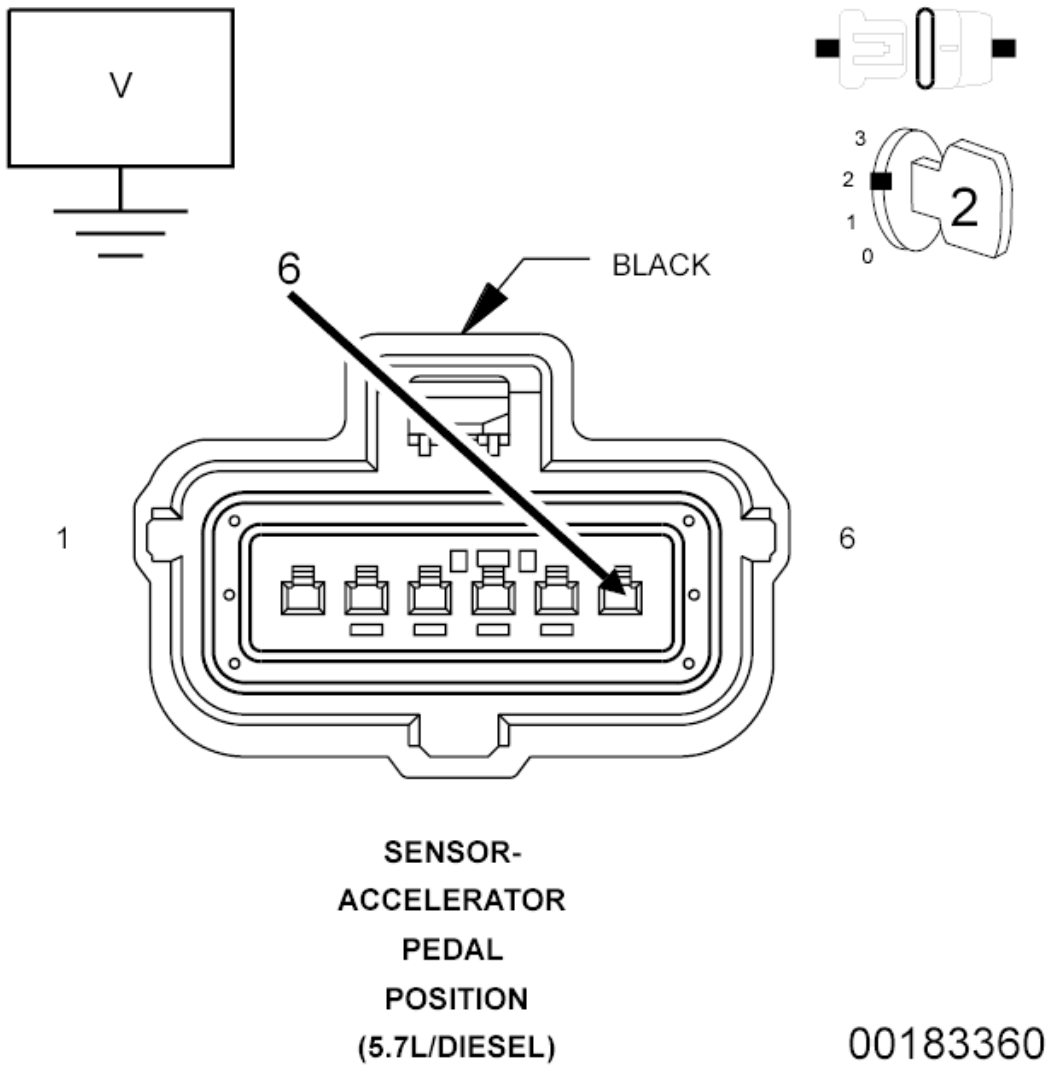

Fig. 116: Measuring Voltage On 5-Volt Supply Circuit At Accelerator Pedal Position Sensor Harness Connector
Courtesy of CHRYSLER GROUP, LLC

1. Ignition on.
2. Disconnect the Accelerator Pedal Position Sensor harness connector.

NOTE: Check connectors - Clean/repair as necessary.

3. Measure the voltage on the (F855) 5-Volt Supply circuit at the Accelerator Pedal Position Sensor harness connector.

   Is the voltage reading between 4.9 and 5.1 Volts?

Yes

- Replace the Accelerator Pedal Position Sensor in accordance with the service information.
- Perform the POWERTRAIN VERIFICATION TEST - 6.7L. Refer to **POWERTRAIN VERIFICATION TEST - 6.7L** .

No

- Go To 3.

3. **CHECK THE (F855) 5-VOLT SUPPLY CIRCUIT FOR A SHORT TO GROUND**

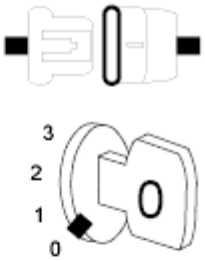

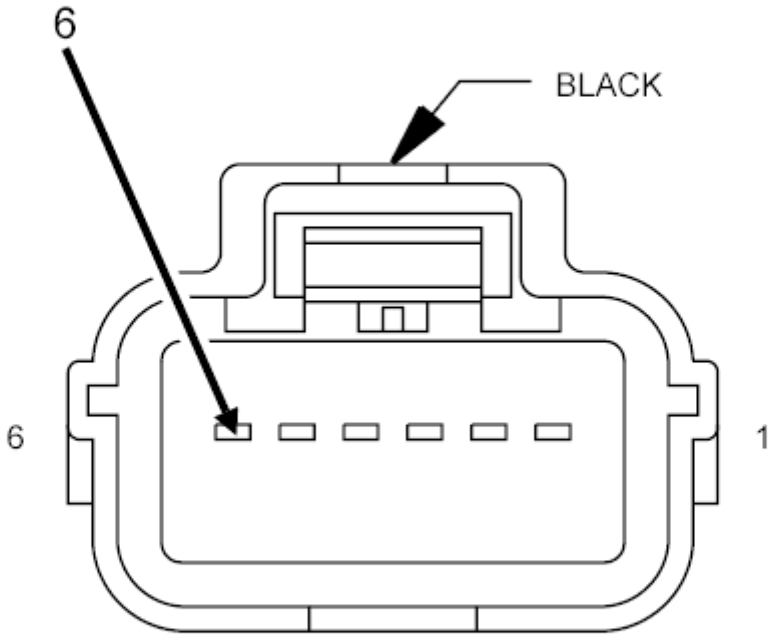

SENSOR-
ACCELERATOR
PEDAL
POSITION

00183354

Fig. 117: Measuring Resistance Between Ground & 5-Volt Supply Circuit At Accelerator Pedal Position Sensor Harness Connector
Courtesy of CHRYSLER GROUP, LLC

1. Turn the ignition off.
2. Disconnect the PCM C2 harness connector.
3. Check connectors - Clean/repair as necessary.
4. Measure the resistance between ground and the (F855) 5-Volt Supply circuit at the Accelerator Pedal Position Sensor harness connector.

   Is the resistance below 10k Ohms?

   Yes

   - Repair the (F855) 5-Volt Supply circuit for a short to ground.
   - Perform the POWERTRAIN VERIFICATION TEST - 6.7L. Refer to **POWERTRAIN VERIFICATION TEST - 6.7L** .

   No

   - Go To 4.

4. **CHECK THE (F855) 5-VOLT SUPPLY CIRCUIT FOR A SHORT TO ANOTHER CIRCUIT**
   1. Measure the resistance between the (F855) 5-Volt Supply circuit and all other circuits at the PCM C2 harness connector.

      Is the resistance below 10k Ohms between the (F855) 5-Volt supply circuit and any of the circuits?

      Yes

      - Repair the short to the circuit that measured below 10k Ohms.
      - Perform the POWERTRAIN VERIFICATION TEST - 6.7L. Refer to **POWERTRAIN VERIFICATION TEST - 6.7L** .

      No

      - Replace and program the Powertrain Control Module in accordance with the service information. Refer to **MODULE, POWERTRAIN CONTROL, 6.7L DIESEL, REMOVAL** and **PCM/ECM / TCM PROGRAMMING** .
      - Perform the POWERTRAIN VERIFICATION TEST - 6.7L. Refer to **POWERTRAIN VERIFICATION TEST - 6.7L** .

P0699-SENSOR REFERENCE VOLTAGE 3 CIRCUIT HIGH

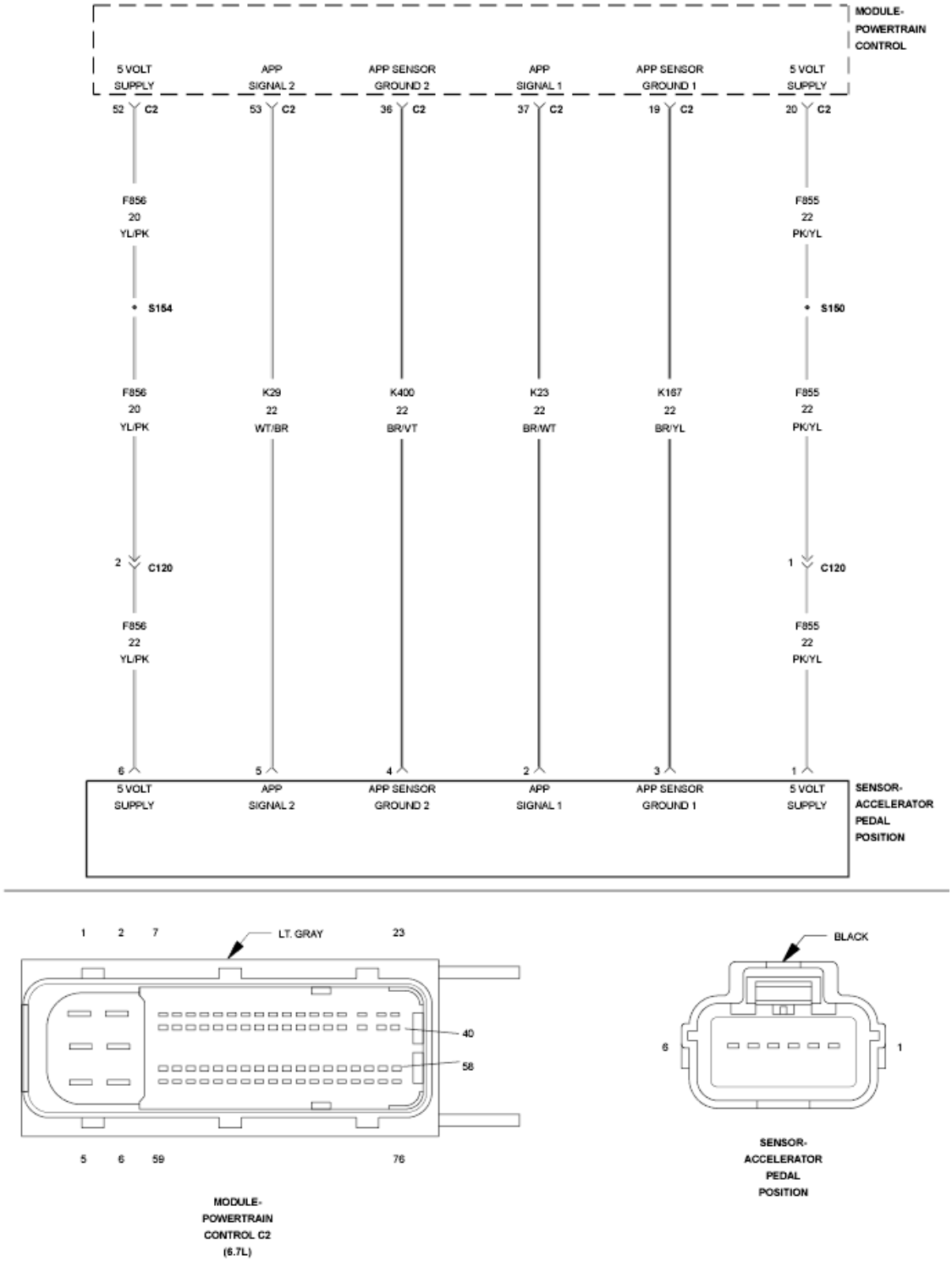

Fig. 118: Accelerator Pedal Position Sensor Circuit Schematic
Courtesy of CHRYSLER GROUP, LLC

For a complete wiring diagram, **refer to appropriate SYSTEM WIRING DIAGRAMS article** .

THEORY OF OPERATION

This sensor supply circuit provides a 5-Volt supply to the Accelerator Pedal Position 1 Sensor (APPS). The Powertrain Control Module (PCM) illuminates the MIL lamp immediately after the diagnostic runs and fails. The ETC lamp will also flash. During this time the customer will be in a limp home mode. The PCM will turn off the MIL lamp after the diagnostic runs and passes in four consecutive drive cycles.

WHEN MONITORED:

With the ignition on, PCM powered.

SET CONDITION:

Voltage detected at the APPS 1 5-Volt Supply circuit is above a calibrated value.

POSSIBLE CAUSES

Possible Causes
(F855) 5-VOLT SUPPLY CIRCUIT SHORTED TO VOLTAGE
POWERTRAIN CONTROL MODULE (PCM)

Always perform the Pre-Diagnostic Troubleshooting procedure before proceeding. Refer to PRE-DIAGNOSTIC TROUBLESHOOTING PROCEDURE - 6.7L .

DIAGNOSTIC TEST

1. **ACTIVE DTC**
    1. Turn the ignition on.
    2. With the scan tool, record all Freeze frame data.
    3. With the scan tool, erase DTCs.
    4. Turn the ignition off for 75 seconds.
    5. Turn the ignition on.
    6. With the scan tool, read DTCs.

    Did the DTC reset?

    Yes

    - Go To 2.

    No

    - Perform the INTERMITTENT CONDITION diagnostic procedure. Refer to **INTERMITTENT CONDITION - 6.7L** .
2. **CHECK THE (F855) 5-VOLT SUPPLY CIRCUIT FOR A SHORT TO VOLTAGE**

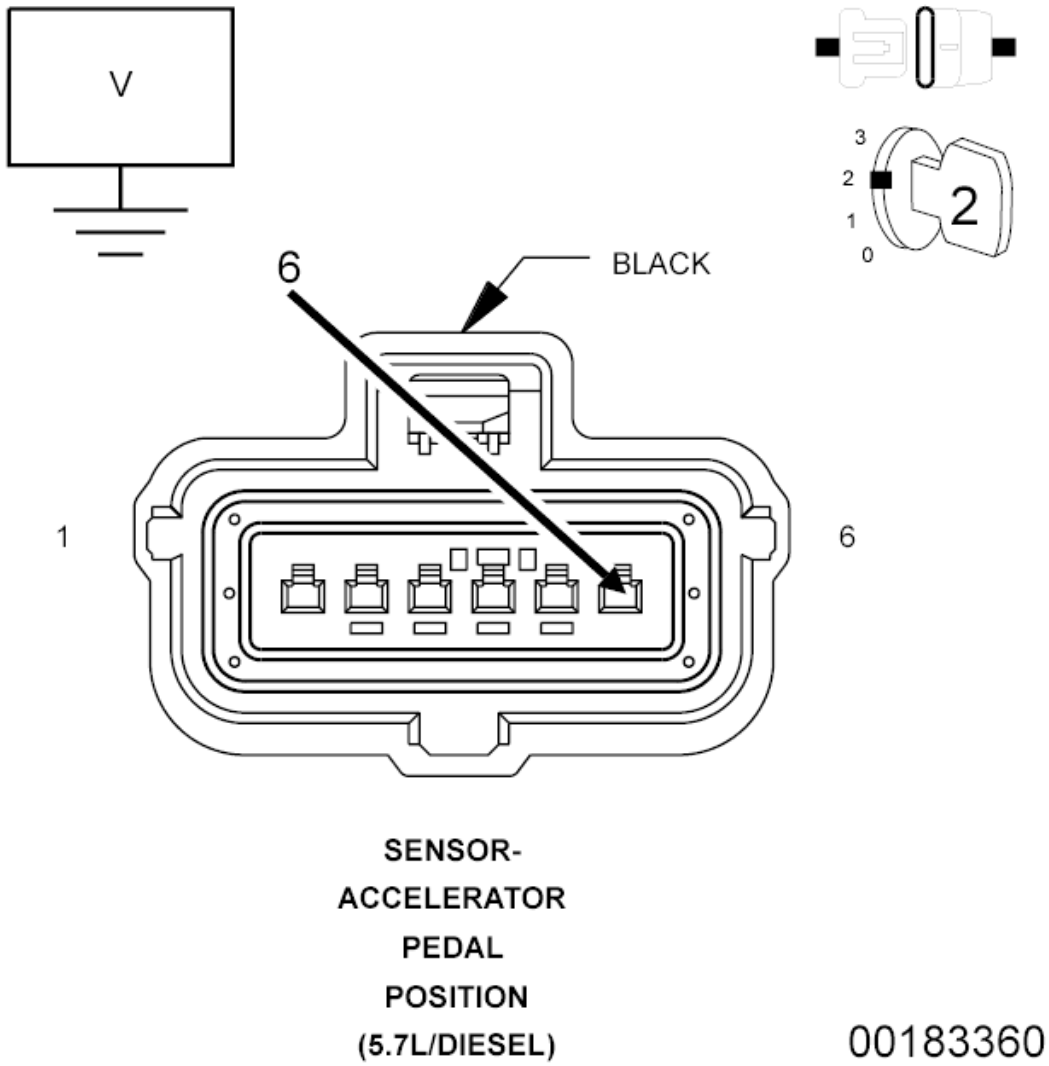

Fig. 119: Measuring Voltage On 5-Volt Supply Circuit At Accelerator Pedal Position Sensor Harness Connector
Courtesy of CHRYSLER GROUP, LLC

1. Turn the ignition off.
2. Disconnect the Accelerator Pedal Position harness connector.
3. Turn the ignition on.
4. Measure the voltage of the (F855) 5-Volt Supply circuit at the Accelerator Pedal Position harness connector.

   Is the voltage reading above 5.1 Volts?

   Yes

   - Repair the (F855) 5-Volt Supply circuit for a short to voltage.

- Perform the POWERTRAIN VERIFICATION TEST - 6.7L. Refer to **POWERTRAIN VERIFICATION TEST - 6.7L** .

No

- Go To 3.

3. **CHECK THE (F855) 5-VOLT SUPPLY CIRCUIT FOR A SHORT TO ANOTHER CIRCUIT**
   1. Turn the ignition off.
   2. Disconnect the PCM C2 harness connector.

      NOTE: Check connectors - Clean/repair as necessary.

   3. Measure the resistance between the (F855) 5-Volt Supply circuit and all other circuits in the PCM C2 connector.

      Is the resistance below 10k Ohms between the (F855) 5-Volt Supply circuit and any of the circuits?

      Yes

      - Repair the short to the circuit that measured below 10k Ohms.
      - Perform the POWERTRAIN VERIFICATION TEST - 6.7L. Refer to **POWERTRAIN VERIFICATION TEST - 6.7L** .

      No

      - Replace the Powertrain Control Module in accordance with the service information.
      - Perform the POWERTRAIN VERIFICATION TEST - 6.7L. Refer to **POWERTRAIN VERIFICATION TEST - 6.7L** .

P06A4-SENSOR REFERENCE VOLTAGE 4 CIRCUIT LOW

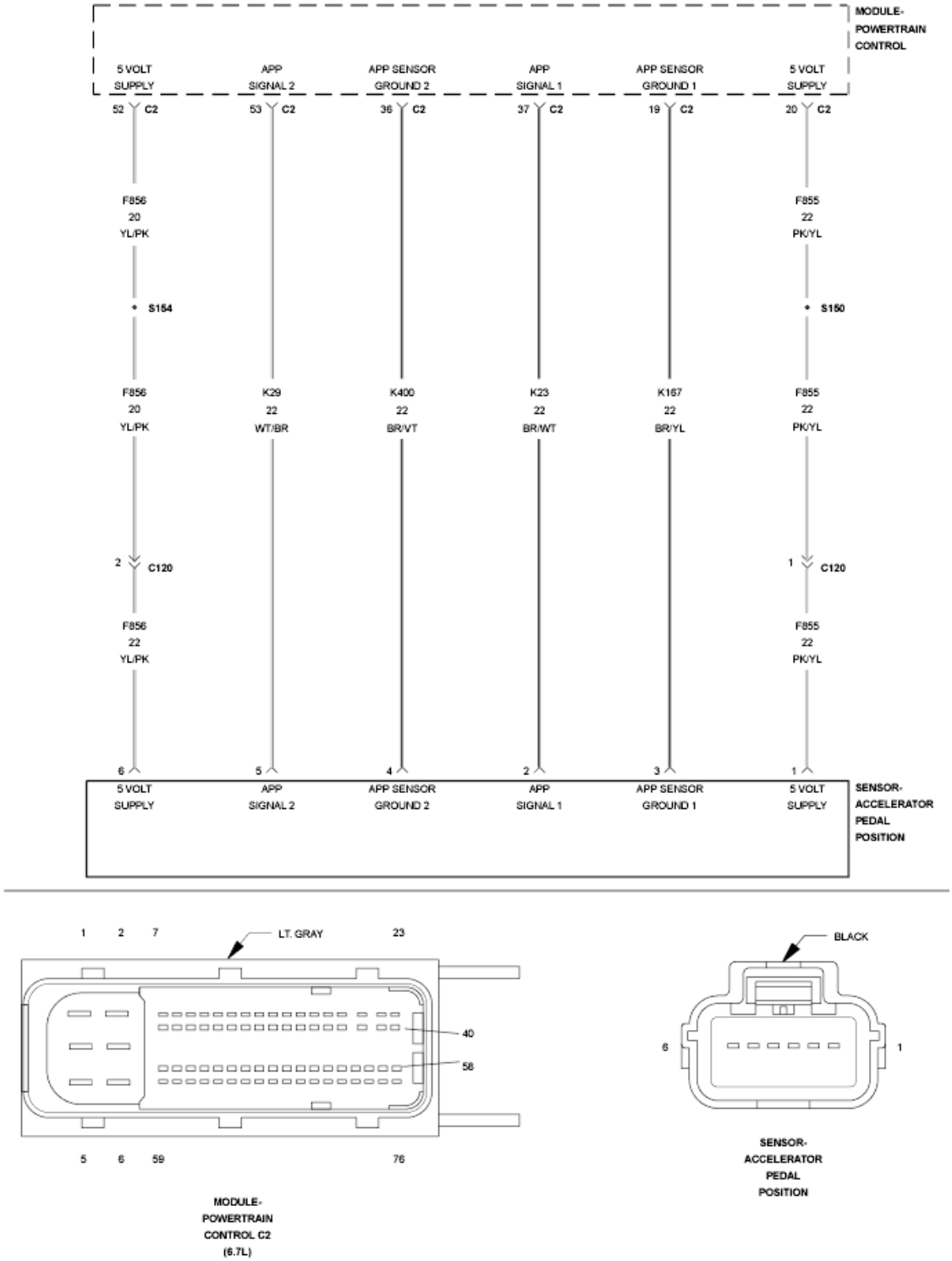

Fig. 120: Accelerator Pedal Position Sensor Circuit Schematic
Courtesy of CHRYSLER GROUP, LLC

For a complete wiring diagram, **refer to appropriate SYSTEM WIRING DIAGRAMS article** .

THEORY OF OPERATION

This sensor supply circuit provides a 5-Volt supply to the Accelerator Pedal Position 2 Sensor (APPS), Diesel Particulate Filter Pressure Sensor and the Transmission Pressure Sensor. The Powertrain Control Module (PCM) illuminates the MIL lamp immediately after the diagnostic runs and fails. The ETC lamp will also flash. During this time the customer will be in a limp home mode. The PCM will turn off the MIL lamp after the diagnostic runs and passes in four consecutive drive cycles.

WHEN MONITORED:

With the ignition on, PCM powered.

SET CONDITION:

Low voltage detected at the (F854) 5-Volt Supply circuit.

POSSIBLE CAUSES

Possible Causes
APPS SENSOR 2
DIESEL PARTICULATE FILTER PRESSURE SENSOR
TRANSMISSION PRESSURE SENSOR
(F854) 5-VOLT SUPPLY CIRCUIT SHORTED TO GROUND
(F854) 5-VOLT SUPPLY CIRCUIT SHORTED TO ANOTHER CIRCUIT
POWERTRAIN CONTROL MODULE (PCM)

Always perform the Pre-Diagnostic Troubleshooting procedure before proceeding. Refer to PRE-DIAGNOSTIC TROUBLESHOOTING PROCEDURE - 6.7L .

DIAGNOSTIC TEST

1. **ACTIVE DTC**
    1. Turn the ignition on.
    2. With the scan tool, record all Freeze frame data.
    3. With the scan tool, erase DTCs.
    4. Turn the ignition off for 75 seconds.
    5. Turn the ignition on.
    6. With the scan tool, read DTCs.

    Did the DTC reset?

    Yes

    - Go To 2.

No

- Perform the INTERMITTENT CONDITION diagnostic procedure. Refer to **INTERMITTENT CONDITION - 6.7L** .

2. **CHECK THE APPS SENSOR 2**

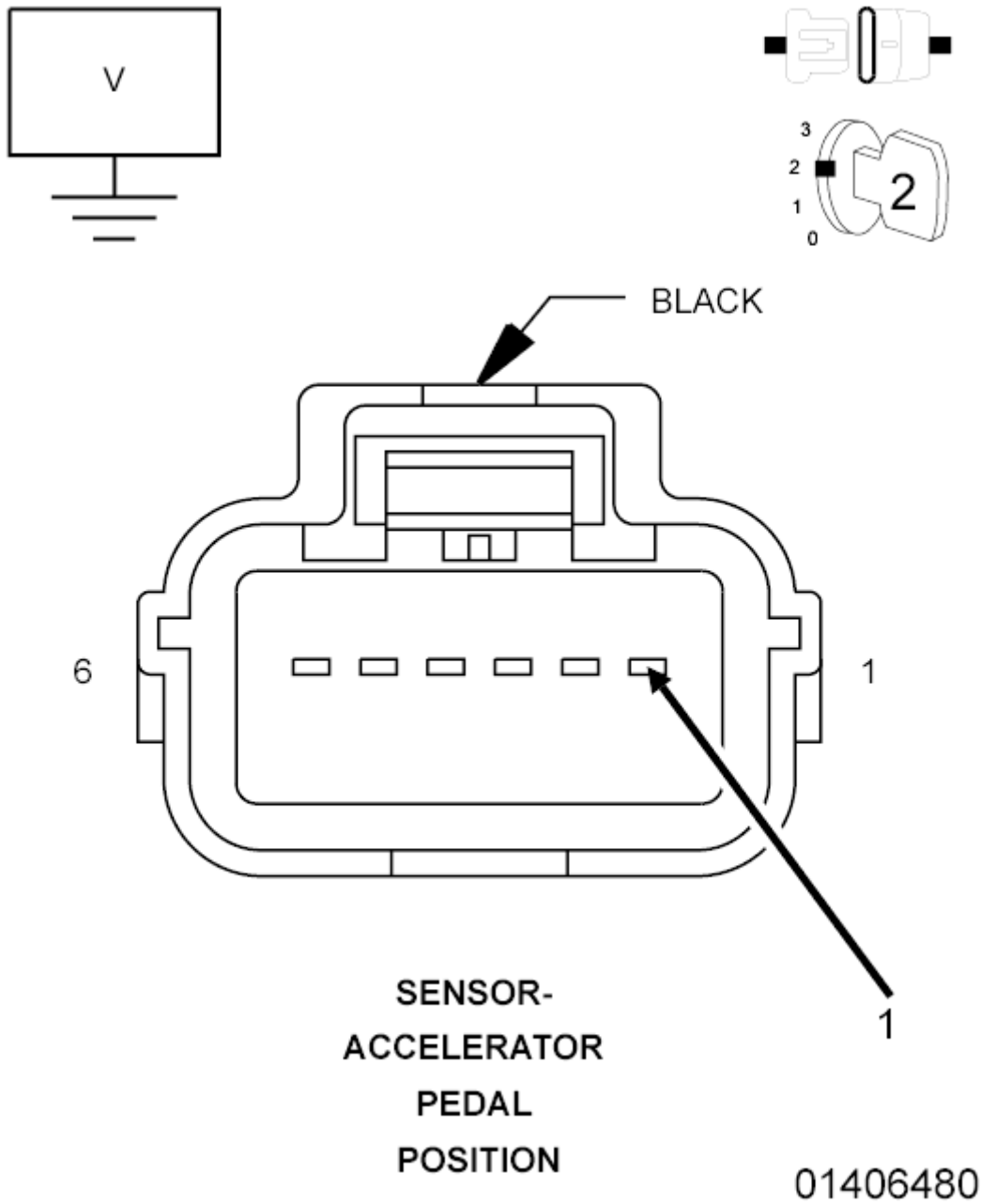

Fig. 121: Measuring Voltage On 5-Volt Supply Circuit At Accelerator Pedal Position Sensor Harness Connector
Courtesy of CHRYSLER GROUP, LLC

1. Ignition on.

2. Disconnect the Accelerator Pedal Position Sensor harness connector.

NOTE: Check connectors - Clean/repair as necessary.

3. Measure the voltage on the (F854) 5-Volt Supply circuit at the Accelerator Pedal Position Sensor harness connector.

   Is the voltage reading between 4.9 and 5.1 Volts?

   Yes

   - Replace the Accelerator Pedal Position Sensor in accordance with the service information.
   - Perform the POWERTRAIN VERIFICATION TEST - 6.7L. Refer to **POWERTRAIN VERIFICATION TEST - 6.7L** .

   No

   - Go To 3.

3. **CHECK THE DIESEL PARTICULATE FILTER PRESSURE SENSOR**

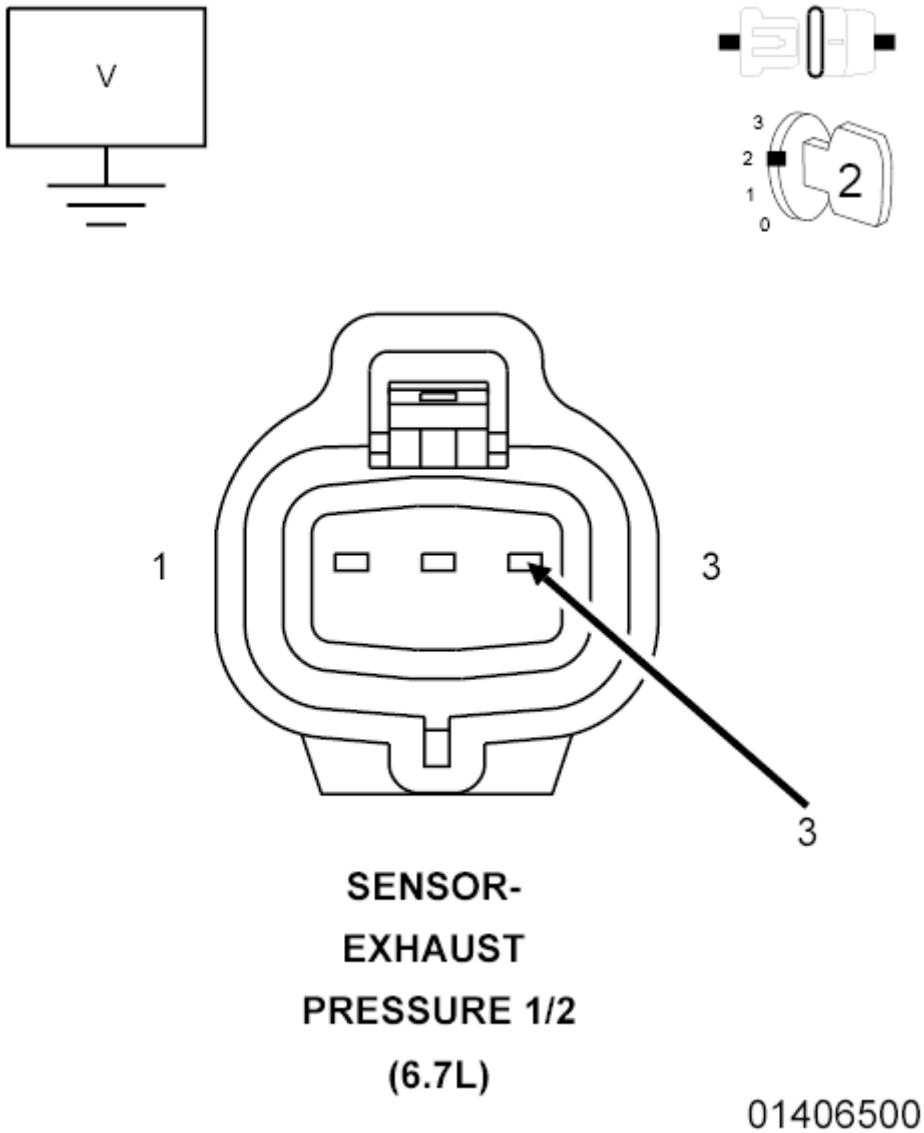

Fig. 122: Measuring Voltage On 5-Volt Supply Circuit At Diesel Particulate Filter Pressure Sensor Harness Connector
Courtesy of CHRYSLER GROUP, LLC

1. Disconnect the Diesel Particulate Filter Pressure Sensor harness connector.

   NOTE: Check connectors - Clean/repair as necessary.

2. Measure the voltage on the (F854) 5-Volt Supply circuit at the Diesel Particulate Filter Pressure Sensor harness connector.

   Is the voltage reading between 4.9 and 5.1 Volts?

   Yes

- Replace the Diesel Particulate Filter Pressure Sensor in accordance with the service information.
- Perform the POWERTRAIN VERIFICATION TEST - 6.7L. Refer to **POWERTRAIN VERIFICATION TEST - 6.7L** .

No

- Go To 4.

4. **CHECK THE TRANSMISSION PRESSURE SENSOR**
   1. Disconnect the Transmission Pressure Sensor harness connector.

      NOTE: Check connectors - Clean/repair as necessary.

   2. Measure the voltage on the (F854) 5-Volt Supply circuit at the Transmission Pressure Sensor harness connector.

      Is the voltage reading between 4.9 and 5.1 Volts?

      Yes

      - Replace the Transmission Pressure Sensor in accordance with the service information.
      - Perform the POWERTRAIN VERIFICATION TEST - 6.7L. Refer to **POWERTRAIN VERIFICATION TEST - 6.7L** .

      No

      - Go To 5.

5. **CHECK THE (F854) 5-VOLT SUPPLY CIRCUIT FOR A SHORT TO GROUND**

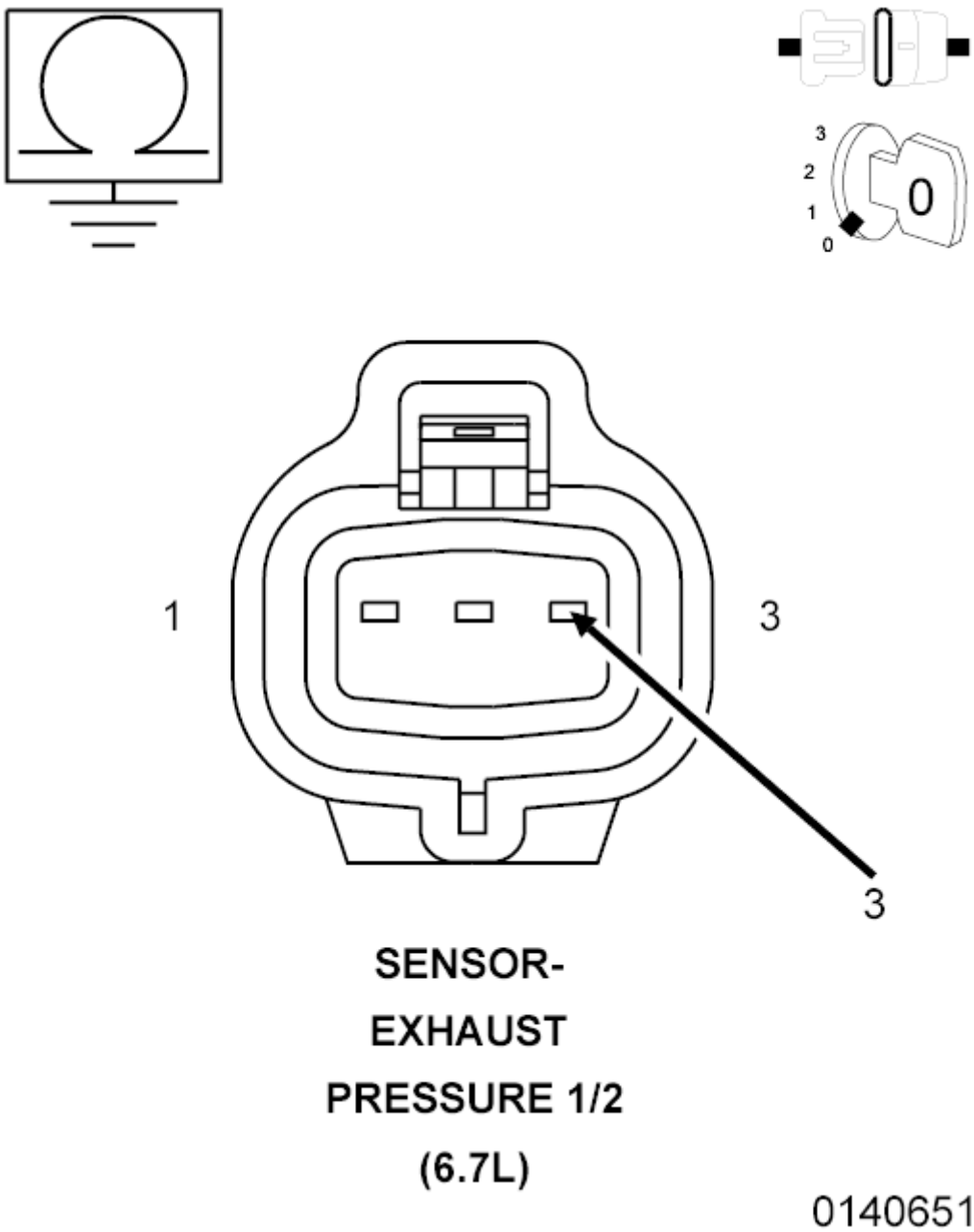

Fig. 123: Measuring Resistance Between Ground & 5-Volt Supply Circuit At Diesel Particulate Filter Pressure Sensor Harness Connector
Courtesy of CHRYSLER GROUP, LLC

1. Turn the ignition off.
2. Disconnect the PCM C2 harness connector.
3. Check connectors - Clean/repair as necessary.
4. Measure the resistance between ground and the (F854) 5-Volt Supply circuit at the Diesel Particulate Filter Pressure Sensor harness connector.

Is the resistance below 10k Ohms?

Yes

- Repair the (F854) 5-Volt Supply circuit for a short to ground.
- Perform the POWERTRAIN VERIFICATION TEST - 6.7L. Refer to **POWERTRAIN VERIFICATION TEST - 6.7L** .

No

- Go To 6.

6. **CHECK FOR THE (F854) 5-VOLT SUPPLY CIRCUIT SHORTED TO ANOTHER CIRCUIT**
   1. Measure the resistance between the (F854) 5-Volt Supply circuit and all other circuits at the PCM C2 harness connector.

      Is the resistance below 10k Ohms between the (F854) 5-Volt Supply circuit and any of the circuits?

      Yes

      - Repair the short to the circuit that measured below 10k Ohms.
      - Perform the POWERTRAIN VERIFICATION TEST - 6.7L. Refer to **POWERTRAIN VERIFICATION TEST - 6.7L** .

      No

      - Replace and program the Powertrain Control Module in accordance with the service information. Refer to **MODULE, POWERTRAIN CONTROL, 6.7L DIESEL, REMOVAL** and **PCM/ECM / TCM PROGRAMMING** .
      - Perform the POWERTRAIN VERIFICATION TEST - 6.7L. Refer to **POWERTRAIN VERIFICATION TEST - 6.7L** .

P06A5-SENSOR REFERENCE VOLTAGE 4 CIRCUIT HIGH

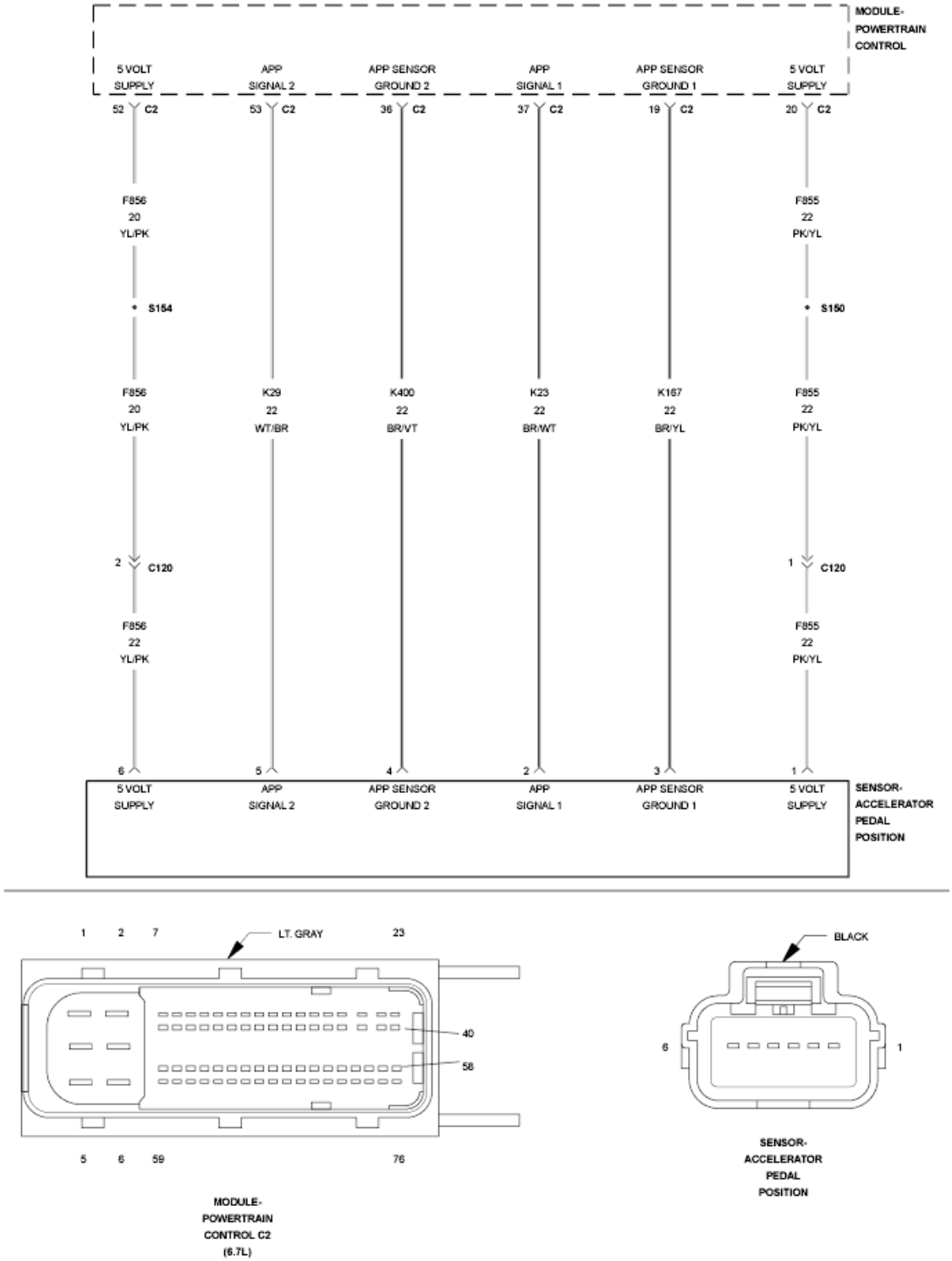

Fig. 124: Accelerator Pedal Position Sensor Circuit Schematic
Courtesy of CHRYSLER GROUP, LLC

For a complete wiring diagram, **refer to appropriate SYSTEM WIRING DIAGRAMS article** .

THEORY OF OPERATION

This sensor supply circuit provides a 5-Volt supply to the Accelerator Pedal Position 2 Sensor (APPS), Diesel Particulate Filter Pressure Sensor and the Transmission Pressure Sensor. The Powertrain Control Module (PCM) illuminates the MIL lamp immediately after the diagnostic runs and fails. The ETC lamp will also flash. During this time the customer will be in a limp home mode. The PCM will turn off the MIL lamp after the diagnostic runs and passes in four consecutive drive cycles.

WHEN MONITORED:

With the ignition on, PCM powered.

SET CONDITION:

Voltage detected at the 5-Volt Supply circuit is above a calibrated value.

POSSIBLE CAUSES

Possible Causes
(K854) 5-VOLT SUPPLY SHORT TO VOLTAGE
POWERTRAIN CONTROL MODULE (PCM)

Always perform the Pre-Diagnostic Troubleshooting procedure before proceeding. Refer to PRE-DIAGNOSTIC TROUBLESHOOTING PROCEDURE - 6.7L .

DIAGNOSTIC TEST

1. **ACTIVE DTC**
    1. Turn the ignition on.
    2. With the scan tool, record all Freeze frame data.
    3. With the scan tool, erase DTCs.
    4. Turn the ignition off for 75 seconds.
    5. Turn the ignition on.
    6. With the scan tool, read DTCs.

    Did the DTC reset?

    Yes

    - Go To 2.

    No

    - Perform the INTERMITTENT CONDITION diagnostic procedure. Refer to **INTERMITTENT CONDITION - 6.7L** .

2. **CHECK THE (K854) 5-VOLT SUPPLY FOR A SHORT TO VOLTAGE**

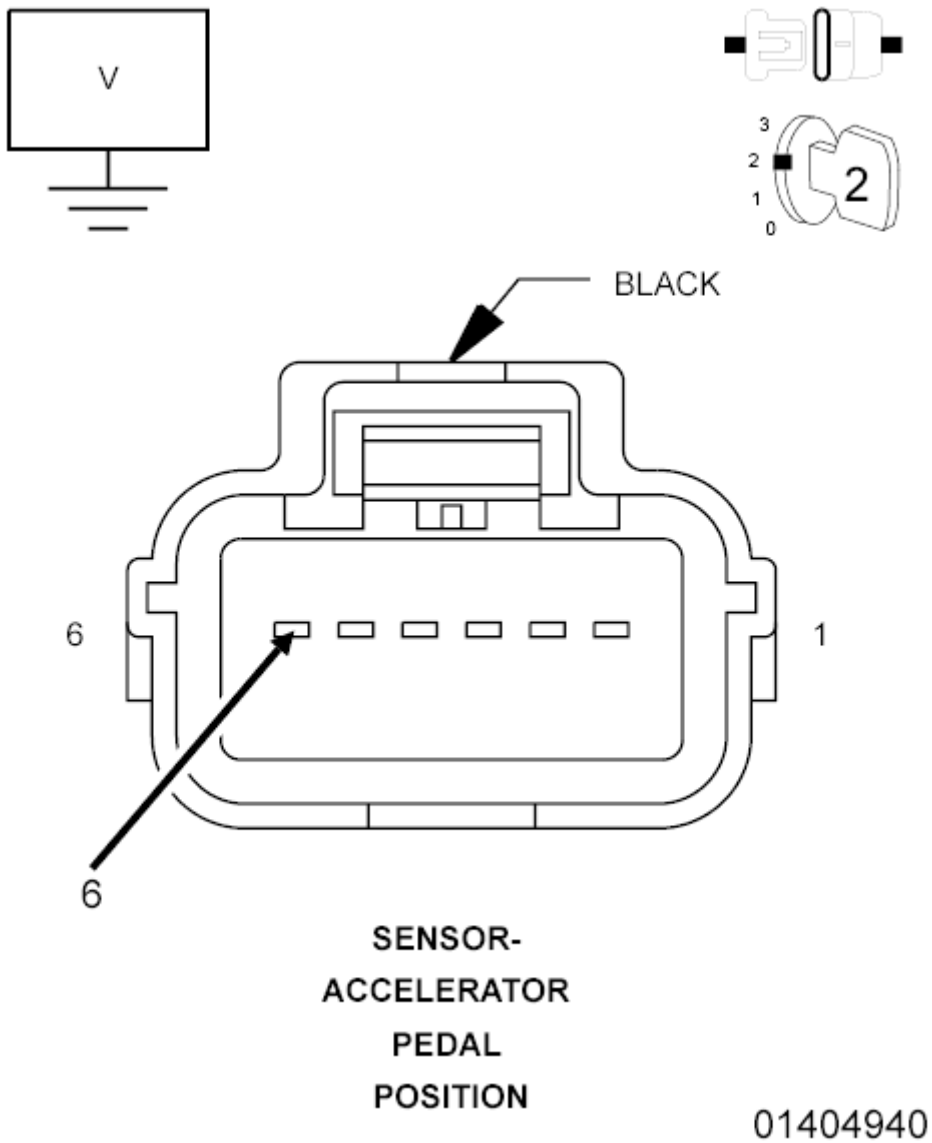

Fig. 125: Measuring Voltage Of 5-Volt Supply Circuit At Accelerator Pedal Position Harness Connector
Courtesy of CHRYSLER GROUP, LLC

1. Turn the ignition off.
2. Disconnect the components listed in the theory of operation.
3. Turn the ignition on.
4. Measure the voltage of the (K854) 5-Volt Supply circuit at the Accelerator Pedal Position harness connector.

   Is the voltage reading above 5.1 Volts?

Yes

- Repair the (K854) 5-Volt Supply circuit for a short to voltage.
- Perform the POWERTRAIN VERIFICATION TEST - 6.7L. Refer to **POWERTRAIN VERIFICATION TEST - 6.7L** .

No

- Go To 3.

3. **CHECK THE (F855) 5-VOLT SUPPLY CIRCUIT FOR A SHORT TO ANOTHER CIRCUIT**
   1. Turn the ignition off.
   2. Disconnect the PCM C2 harness connector.

      NOTE: Check connectors - Clean/repair as necessary.

   3. Measure the resistance between the (K854) 5-Volt Supply circuit and all other circuits in the PCM C2 connector.

      Is the resistance below 10k Ohms between the (K854) 5-Volt Supply circuit and any of the circuits?

      Yes

      - Repair the short to the circuit that measured below 10k Ohms.
      - Perform the POWERTRAIN VERIFICATION TEST - 6.7L. Refer to **POWERTRAIN VERIFICATION TEST - 6.7L** .

      No

      - Replace the Powertrain Control Module in accordance with the service information.
      - Perform the POWERTRAIN VERIFICATION TEST - 6.7L. Refer to **POWERTRAIN VERIFICATION TEST - 6.7L** .

P06F3-(DIESEL EXHAUST FLUID) REDUCTANT CONTROL MODULE INTERNAL TEMPERATURE SENSOR CIRCUIT HIGH

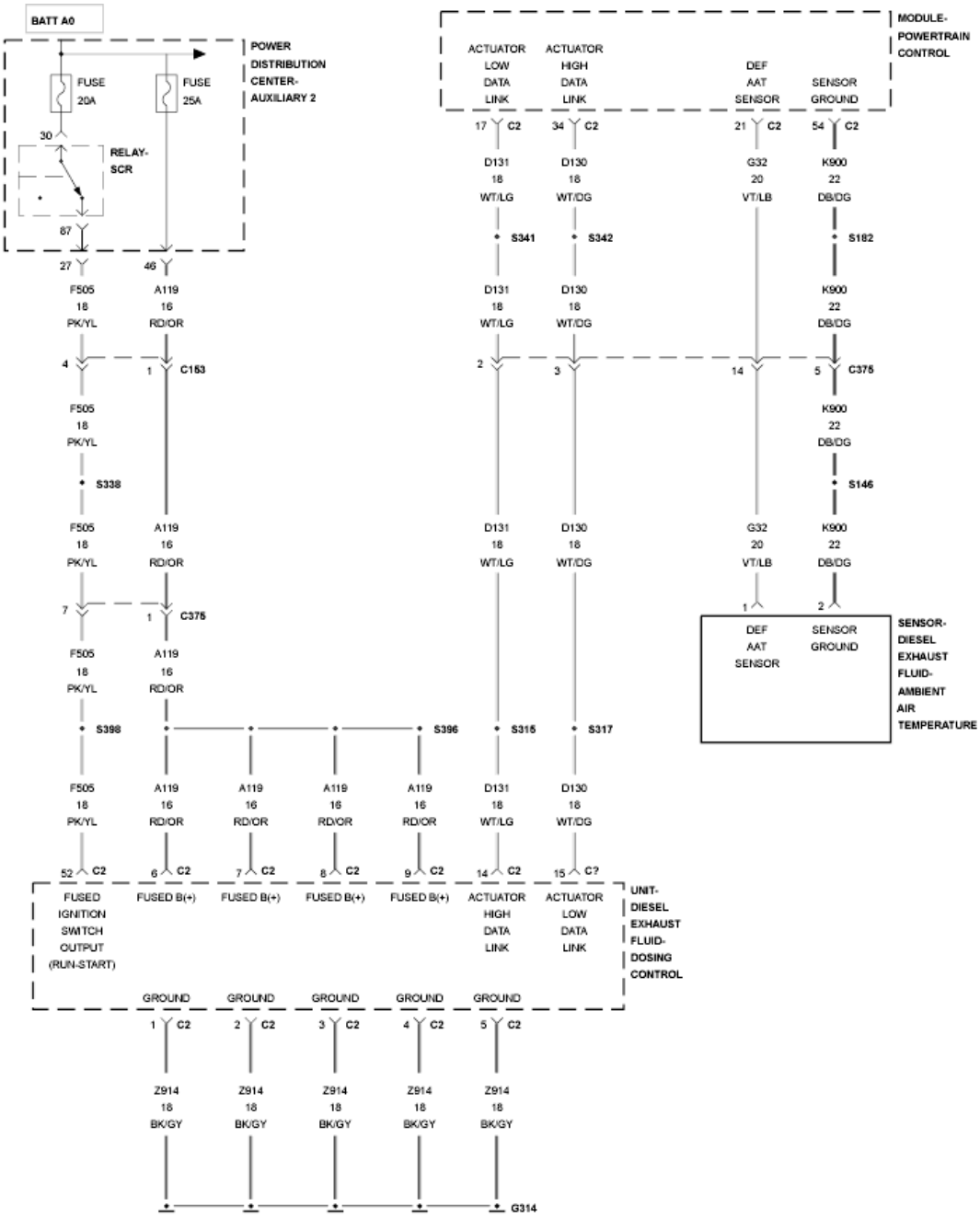

Fig. 126: Diesel Exhaust Fluid (DEF) Dosing Control Unit Wiring Diagram
Courtesy of CHRYSLER GROUP, LLC

For a complete wiring diagram, **refer to appropriate SYSTEM WIRING DIAGRAMS article** .

THEORY OF OPERATION

The Diesel Exhaust Fluid (DEF) Dosing Control Unit is used to control the operation and monitoring of the Diesel Exhaust Fluid system. The aftertreatment Diesel Exhaust Fluid Dosing Control Unit is equipped with an internal temperature sensor, which monitors the temperature inside the control unit during operation. The DEF

Dosing Control Unit shares this information with the Powertrain Control Module over the J1939 Data Link. Diesel exhaust fluid injection into the aftertreatment system is disabled.

WHEN MONITORED:

This monitor runs during normal operation when dosing is being commanded by the DEF Dosing Control Unit.

SET CONDITION:

The internal temperature of the DEF Dosing Control Unit is above 114°F [238°C] for more than five seconds.

POSSIBLE CAUSES

Possible Causes
INADEQUATE AIRFLOW TO COOL THE DEF DOSING CONTROL UNIT
IMPROPER MOUNTING OF THE DEF DOSING CONTROL UNIT
DEF DOSING CONTROL UNIT

Always perform the Pre-Diagnostic Troubleshooting procedure before proceeding. Refer to PRE-DIAGNOSTIC TROUBLESHOOTING PROCEDURE - 6.7L .

DIAGNOSTIC TEST

1. **CHECK THE DEF DOSING CONTROL UNIT FOR PROPER MOUNTING**

   NOTE: Perform the diagnostics for this DTC regardless or whether code is active or stored.

   1. Visually inspect to ensure that the DEF Dosing Control Unit is mounted in the correct location on the vehicle.
   2. Check that all the fasteners are properly installed and secured.

      Is the DEF Dosing Control Unit properly installed?

      Yes

      - Go To 2.

      No

      - Re-secure the DEF Dosing Control Unit properly.
      - Perform the POWERTRAIN VERIFICATION TEST - 6.7L. Refer to **POWERTRAIN VERIFICATION TEST - 6.7L** .
2. **CHECK FOR AN OBSTRUCTION OF AIRFLOW TO THE DEF DOSING CONTROL UNIT**
   1. Visually inspect for excessive debris on or around the DEF Dosing Control Unit.

2. Visually inspect for any aftermarket brackets or shields that can obstruct airflow to the DEF Dosing Control Unit.

   Is there any obstructions to the airflow to the DEF Dosing Control Unit?

   Yes

   - Repair the cause of the obstruction to the DEF Dosing Control Unit.
   - Perform the POWERTRAIN VERIFICATION TEST - 6.7L. Refer to **POWERTRAIN VERIFICATION TEST - 6.7L** .

   No

   - Erase the DTC and test drive the vehicle. If the DTC returns, replace the DEF Dosing Control Unit in accordance with the service information. Refer to **UNIT, DIESEL EXHAUST FLUID DOSING CONTROL, REMOVAL** .
   - Perform the POWERTRAIN VERIFICATION TEST - 6.7L. Refer to **POWERTRAIN VERIFICATION TEST - 6.7L** .

P0700-TRANSMISSION CONTROL SYSTEM (MIL REQUEST)

For a complete wiring diagram, **refer to appropriate SYSTEM WIRING DIAGRAMS article** .

WHEN MONITORED:

With the ignition on and battery voltage above 10.0 Volts.

SET CONDITION:

An active DTC is stored in the Transmission Control Module. This is a one trip fault. Three good trips to turn off the MIL Lamp.

POSSIBLE CAUSES

Possible Causes
DTC PRESENT IN THE TRANSMISSION CONTROL MODULE (TCM)

Always perform the Pre-Diagnostic Troubleshooting procedure before proceeding. Refer to PRE-DIAGNOSTIC TROUBLESHOOTING PROCEDURE - 6.7L .

DIAGNOSTIC TEST

1. **DTC PRESENT IN EATX CONTROLLER**
   1. This is an information only DTC to inform that a DTC(s) is stored in the Transmission Control Module.
   2. Erase the DTC in the PCM after all Transmission DTC(s) have been repaired.

3. With the scan tool, View all Transmission DTCs and perform the appropriate diagnostic procedure.

   PCM diagnostic information

   Continue

   - Test complete.

P0850-PARK/NEUTRAL SWITCH PERFORMANCE

For a complete wiring diagram, **refer to appropriate SYSTEM WIRING DIAGRAMS article** .

THEORY OF OPERATION

The transmission PRNDL diagnostics will detect transmission stuck in park error, if the vehicle speed is greater than a calibrated threshold and selected gear is PARK according to the received CAN message. It will also detect transmission stuck in drive error, if the engine crank state is seen while the selected gear is DRIVE according to the received CAN message.

WHEN MONITORED:

When the vehicle is moving.

SET CONDITION:

Vehicle speed is detected while the transmission reports that the vehicle is in park.

POSSIBLE CAUSES

Possible Causes
TRANSMISSION STUCK IN PARK
TOWING VEHICLE WITH THE IGNITION ON

Always perform the Pre-Diagnostic Troubleshooting procedure before proceeding. Refer to PRE-DIAGNOSTIC TROUBLESHOOTING PROCEDURE - 6.7L .

DIAGNOSTIC TEST

1. **TRANSMISSION STUCK IN PARK**

   See repair.

   Repair

   - Repair the transmission/CAN related problem.

P1123-POWER TAKE OFF SYSTEM MONITOR CONTROL ERROR

For a complete wiring diagram, **refer to appropriate SYSTEM WIRING DIAGRAMS article** .

WHEN MONITORED:

Continuously with the ignition on, and Powertrain Control Module (PCM) receives an input from the Power Take Off (PTO) switch.

SET CONDITION:

Torque engagement inputs for PTO operation are out of range or torque disengagement inputs for PTO operation is not being followed within expected fail-safe boundaries for 0.5 of a second.

POSSIBLE CAUSES

Possible Causes
AFTERMARKET PTO SYSTEM INSTALLED ON VEHICLE
SPEED CONTROL SWITCH
PCM SOFTWARE UPDATE
POWERTRAIN CONTROL MODULE (PCM)

Always perform the Pre-Diagnostic Troubleshooting procedure before proceeding. Refer to PRE-DIAGNOSTIC TROUBLESHOOTING PROCEDURE - 6.7L .

DIAGNOSTIC TEST

1. **OTHER DTCS**
    1. Ignition on, engine not running.
    2. With the scan tool, read DTCs.

    Is DTC P061A also present?

    Yes

    - Repair DTC P061A before proceeding.

    No

    - Go To 3.
2. **CHECK FOR AFTERMARKET PTO SYSTEM INSTALLED ON VEHICLE**

    NOTE: If there are any Speed Control DTCs present, perform those test procedures before continuing with this procedure.

    1. Visually inspect for an aftermarket PTO system installed on the vehicle.

    Was an aftermarket PTO system installed?

Yes

- Test complete. Inform customer that aftermarket system is causing fault.

No

- Go To

3. **CHECK FOR SOFTWARE UPDATES**
   1. Check for any TSBs that may apply.
   2. Check the PCM part number and insure that the PCM is at the latest release level.

   Are any PCM updates available?

   Yes

   - Reprogram the Powertrain Control Module with the latest software version
   - Perform the POWERTRAIN VERIFICATION TEST - 6.7L. Refer to **POWERTRAIN VERIFICATION TEST - 6.7L** .

   No

   - Replace the Powertrain Control Module in accordance with the service information.
   - Perform the POWERTRAIN VERIFICATION TEST - 6.7L. Refer to **POWERTRAIN VERIFICATION TEST - 6.7L** .

P1191 - INLET AIR TEMPERATURE SENSOR RATIONAL/PERFORMANCE

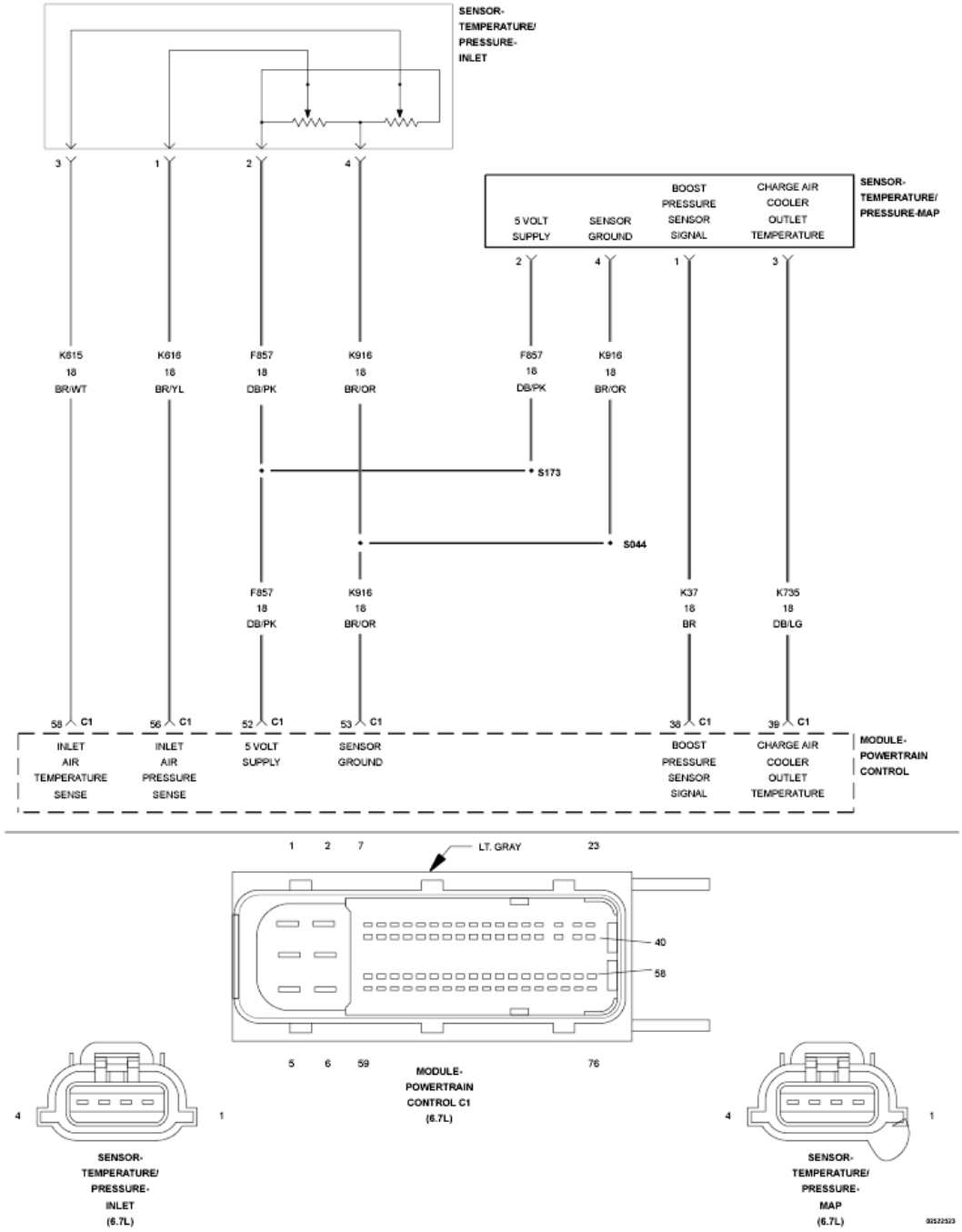

Fig. 127: Inlet Air Temperature Sensor Circuit Schematic
Courtesy of CHRYSLER GROUP, LLC

For a complete wiring diagram, **refer to appropriate SYSTEM WIRING DIAGRAMS article** .

THEORY OF OPERATION

The Inlet Air Pressure is part of the Inlet Temperature/Pressure Sensor which is located in the top of the air cleaner box. The Inlet Air Temperature Sensor performance looks at the outputs of four temperature sensors and compares them under cold start conditions. At key on after an eight hour cold soak, the values of the Inlet Air

Temperature, Engine Coolant Temperature, Intake Air Temperature and EGR Orifice Temperature sensors are compared. If the Engine Coolant, Intake Air and EGR Orifice Temperature Sensors agree and the Inlet Air Temperature does not agree, the Inlet Air Temperature Sensor is declared irrational. This diagnostics also checks for a change in sensor value over a period of time. This is to verify that the sensor is responding with temperature change. The Powertrain Control Module (PCM) will illuminate the MIL lamp after this diagnostic runs and fails in two consecutive drive cycles. The PCM will turn off the MIL lamp once the diagnostic runs and passes in four consecutive drive cycles.

WHEN MONITORED:

While the engine is running.

SET CONDITION:

The Powertrain Control Module (PCM) does not read a change in value from the sensor over time. The PCM value after a cold soak for the inlet air temperature sensor varies from other engine temperature sensors.

POSSIBLE CAUSES

Possible Causes
HIGH RESISTANCE IN THE (K615) INLET AIR TEMPERATURE SENSOR SIGNAL CIRCUIT INLET AIR TEMPERATURE SENSOR

Always perform the Pre-Diagnostic Troubleshooting procedure before proceeding. Refer to PRE-DIAGNOSTIC TROUBLESHOOTING PROCEDURE - 6.7L .

DIAGNOSTIC TEST

1. **CHECK THE INLET AIR TEMPERATURE SENSOR**
    1. Remove the temperature sensor and reconnect the wiring to the sensor.
    2. With the scan tool in Sensors, monitor the Inlet Air Temperature.
    3. While heating the sensor with an external heat source (DO NOT USE OPEN FLAME).

    Does the reading from the sensor increase at least 5° F on the scan tool?

    Yes

    - Go To 2.

    No

    - Replace the Inlet Air Temperature/Pressure Sensor in accordance with the service information.
    - Perform the POWERTRAIN VERIFICATION TEST - 6.7L. Refer to **POWERTRAIN VERIFICATION TEST - 6.7L** .
2. **CHECK THE INLET AIR TEMPERATURE SENSOR**

1. After an eight hour cold soak, with the scan tool connected, monitor Inlet Air Temperature Sensor, Battery Temperature Sensor, Intake Air Temperature Sensor and Engine Coolant Temperature Sensor.

NOTE: **Make sure inlet air temperature is above 20° F when performing this test.**

NOTE: **Make sure there is no external heat source, such as a block heater, operating during this test or within the eight hour cold soak.**

Does the Inlet Air Temperature Sensor read differently from the other sensors?

Yes

- Go To 3.

No

- Perform the INTERMITTENT CONDITION diagnostic procedure. Refer to **INTERMITTENT CONDITION - 6.7L** .

3. **CHECK FOR HIGH RESISTANCE IN THE (K615) INLET AIR TEMPERATURE SENSOR SIGNAL CIRCUIT**
   1. Disconnect the Inlet Air Temperature/Pressure Sensor harness connector.
   2. Disconnect the PCM C1 harness connector.
   3. Measure the resistance of the (K615) Inlet Air Temperature Sensor Signal circuit between the Inlet Air Pressure/Temperature Sensor harness connector and the PCM C1 harness connector.

   Is the resistance below 5.0 Ohms?

   Yes

   - Replace the Inlet Air Temperature/Pressure Sensor in accordance with the service information.
   - Perform the POWERTRAIN VERIFICATION TEST - 6.7L. Refer to **POWERTRAIN VERIFICATION TEST - 6.7L** .

   No

   - Repair the (K615) Inlet Air Temperature Sensor Signal circuit for an open or high resistance.
   - Perform the POWERTRAIN VERIFICATION TEST - 6.7L. Refer to **POWERTRAIN VERIFICATION TEST - 6.7L** .

Powertrain Control Module (PCM) - Electrical Diagnostics, 6.7L Diesel - 3500 Cab & Chassis, 4500 & 5500

DIAGNOSIS AND TESTING

P1192-INLET AIR TEMPERATURE SENSOR CIRCUIT LOW

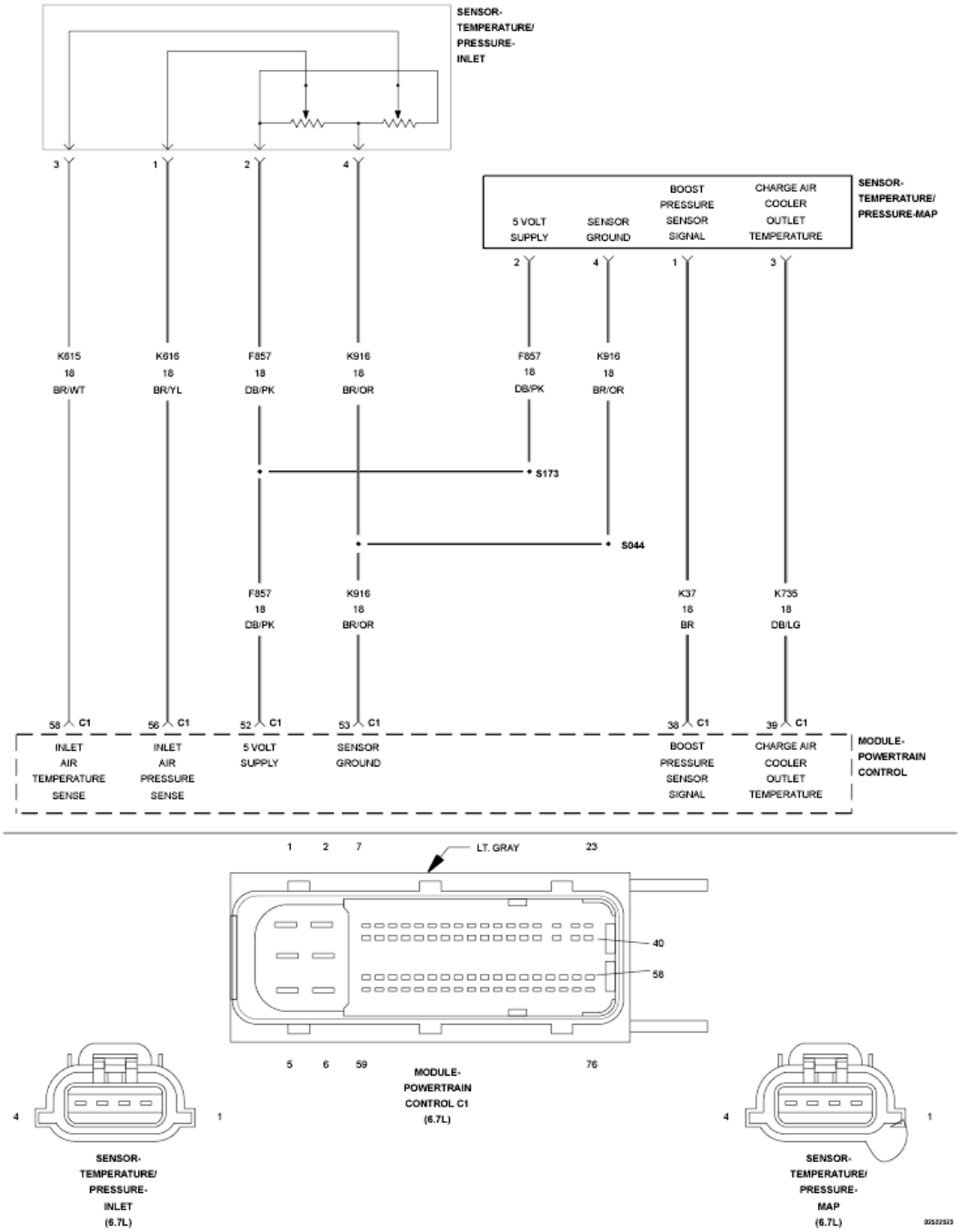

Fig. 1: Inlet Air Temperature Sensor Circuit Schematic

Courtesy of CHRYSLER GROUP, LLC

For a complete wiring diagram, **refer to appropriate SYSTEM WIRING DIAGRAMS article** .

THEORY OF OPERATION

The Inlet Air Temperature Sensor and the Inlet Air Pressure Sensor are combined in one sensor and are located in the top of the air cleaner box. The Inlet Air Temperature Sensor is used to measure the temperature of the air entering the intake system. The Powertrain Control Module (PCM) provides a 5-Volt supply and sensor ground for the Inlet Air Temperature Sensor. The Inlet Air Temperature Sensor provides a signal back to the PCM on the Inlet Air Temperature Sensor Signal circuit. If this fault becomes active the PCM will light the MIL light.

WHEN MONITORED:

When the Powertrain Control Module (PCM) is powered on.

SET CONDITION:

The signal voltage to the PCM falls below a 0.1 Volts for one second.

POSSIBLE CAUSES

Possible Causes
(K615) INLET AIR TEMPERATURE SENSOR SIGNAL CIRCUIT SHORTED TO GROUND
(K615) INLET AIR TEMPERATURE SENSOR SIGNAL CIRCUIT SHORTED TO THE (K916) SENSOR GROUND
INLET AIR TEMPERATURE/PRESSURE SENSOR
POWERTRAIN CONTROL MODULE (PCM)

Always perform the Pre-Diagnostic Troubleshooting procedure before proceeding. Refer to PRE-DIAGNOSTIC TROUBLESHOOTING PROCEDURE - 6.7L .

DIAGNOSTIC TEST

1. **ACTIVE DTC**

NOTE: **If there are any 5-Volt supply DTCs present, repair those DTCs before proceeding.**

1. Turn the ignition on.
2. With the scan tool, record all Freeze frame data.
3. With the scan tool, erase DTCs.
4. Turn the ignition off for 75 seconds.
5. Turn the ignition on.
6. With the scan tool, read DTCs.

Did the DTC reset?

Yes

- Go To 2.

No

- Perform the INTERMITTENT CONDITION diagnostic procedure. Refer to **INTERMITTENT CONDITION - 6.7L** .

2. **CHECK THE (K615) INLET AIR TEMPERATURE SENSOR SIGNAL CIRCUIT FOR A SHORT TO GROUND**

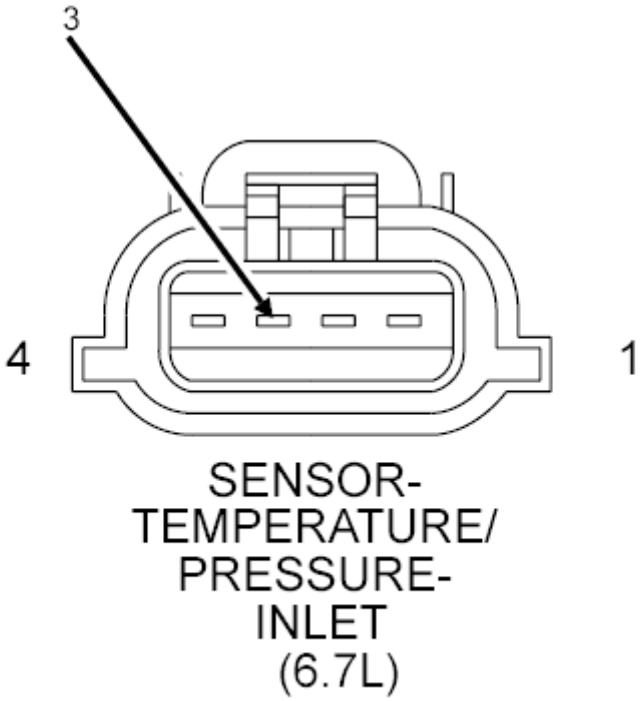

Fig. 2: Checking Inlet Air Temperature Sensor Signal Circuit For Short To Ground

1. Turn the ignition off.
2. Disconnect the Inlet Air Temperature/Pressure Sensor harness connector.
3. Disconnect the PCM C1 harness connector.
4. Measure the resistance between ground and the (K615) Inlet Air Temperature/Pressure Sensor Signal circuit at the Inlet Air Temperature/Pressure Sensor harness connector.

   Is the resistance below 10k Ohms?

   Yes

   - Repair the (K615) Inlet Air Temperature Sensor Signal circuit for a short to ground.
   - Perform the POWERTRAIN VERIFICATION TEST. Refer to **POWERTRAIN VERIFICATION TEST - 6.7L** .

   No

   - Go To 3.

3. **CHECK FOR THE (K615) INLET AIR TEMPERATURE SENSOR SIGNAL CIRCUIT SHORTED TO (K916) SENSOR GROUND**

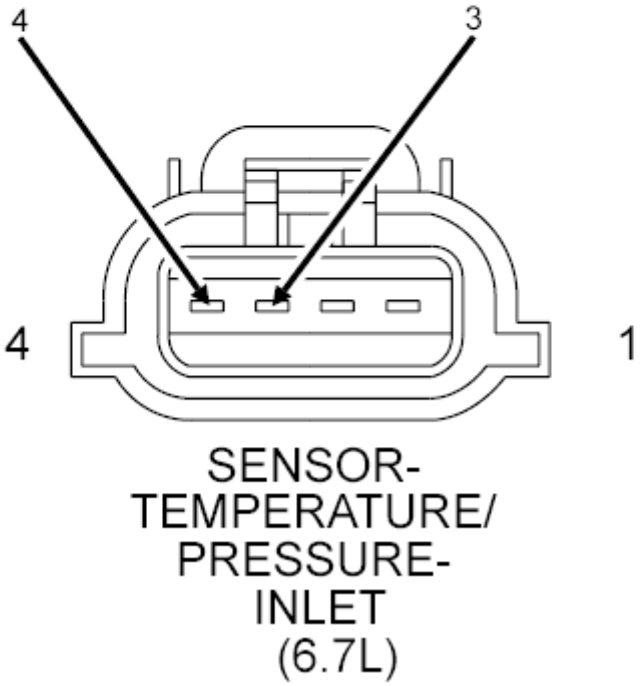

Fig. 3: Check Inlet Air Temperature Sensor Signal Circuit For A Short To Sensor Ground
Courtesy of CHRYSLER GROUP, LLC

1. Measure the resistance between the (K615) Inlet Air Temperature Sensor Signal circuit and the (K916) Sensor Ground circuit at the Inlet Air Temperature/Pressure Sensor harness connector.

   Is the resistance below 10k Ohms?

   Yes

   - Repair the short between the (K615) Inlet Air Temperature Sensor Signal circuit and the (K916) Sensor Ground circuit.
   - Perform the POWERTRAIN VERIFICATION TEST. Refer to **POWERTRAIN VERIFICATION TEST - 6.7L** .

No

- Go To 4.

4. **CHECK THE INLET AIR TEMP SENSOR**
    1. Reconnect the Inlet Air Temperature/Pressure Sensor harness connector.
    2. Reconnect the PCM C1 harness connector.
    3. Turn the ignition on.
    4. With the scan tool, erase DTCs.
    5. While monitoring the scan tool, disconnect the Inlet Air Temperature/Pressure Sensor harness connector.

    Did the DTC P1193 set?

    Yes

    - Replace the Inlet Air Temperature/Pressure Sensor in accordance with the service information.
    - Perform the POWERTRAIN VERIFICATION TEST. Refer to **POWERTRAIN VERIFICATION TEST - 6.7L** .

    No

    - Replace the Powertrain Control Module in accordance with the service information.
    - Perform the POWERTRAIN VERIFICATION TEST. Refer to **POWERTRAIN VERIFICATION TEST - 6.7L** .

P1193-INLET AIR TEMPERATURE SENSOR CIRCUIT HIGH

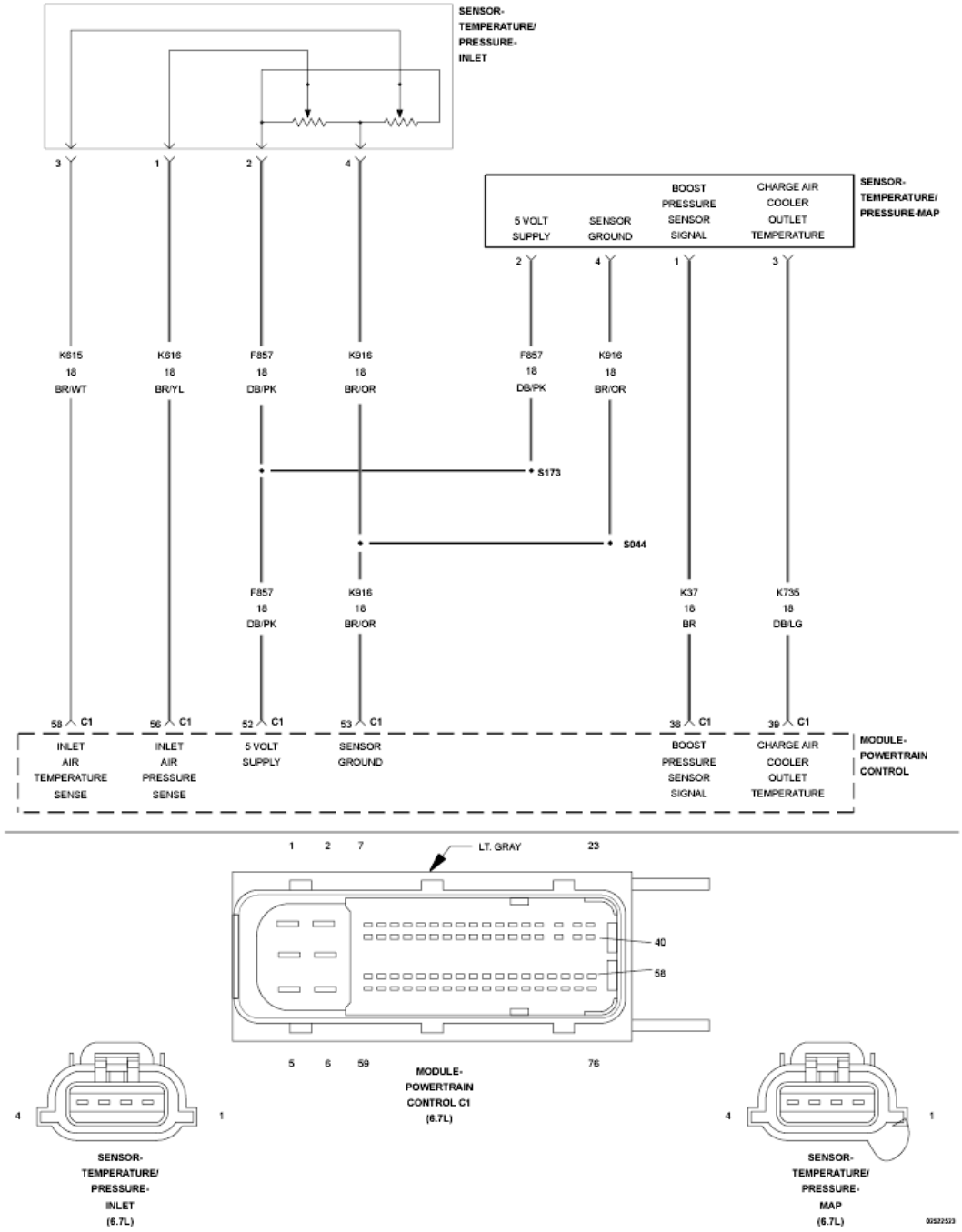

Fig. 4: Inlet Air Temperature Sensor Circuit Schematic
Courtesy of CHRYSLER GROUP, LLC

For a complete wiring diagram, **refer to appropriate SYSTEM WIRING DIAGRAMS article** .

THEORY OF OPERATION

The Inlet Air Temperature Sensor and the Inlet Air Pressure Sensor are combined in one sensor and are located in the top of the air cleaner box. The Inlet Air Temperature Sensor is used to measure the temperature of the air entering the intake system. The Powertrain Control Module (PCM) provides a 5-Volt supply and sensor ground

for the Inlet Air Temperature Sensor. The Inlet Air Temperature Sensor provides a signal back to the PCM on the Inlet Air Temperature Sensor Signal circuit. If this fault becomes active the PCM will light the MIL light.

WHEN MONITORED:

When the Powertrain Control Module (PCM) is powered on.

SET CONDITION:

The circuit voltage to the PCM is above 4.75 Volts for more than one second.

POSSIBLE CAUSES

Possible Causes
(F855) 5-VOLT SUPPLY CIRCUIT SHORTED TO VOLTAGE
(K615) INLET AIR TEMPERATURE SENSOR SIGNAL CIRCUIT SHORTED TO VOLTAGE
(K615) INLET AIR TEMPERATURE SENSOR SIGNAL CIRCUIT OPEN
(K916)) INLET AIR TEMPERATURE SENSOR RETURN CIRCUIT OPEN
INLET AIR TEMPERATURE/PRESSURE SENSOR
POWERTRAIN CONTROL MODULE (PCM)

Always perform the Pre-Diagnostic Troubleshooting procedure before proceeding. Refer to PRE-DIAGNOSTIC TROUBLESHOOTING PROCEDURE - 6.7L .

DIAGNOSTIC TEST

1. **ACTIVE DTC**

   NOTE: If there are any 5-Volt supply DTCs present, repair those DTCs before proceeding.

   1. Turn the ignition on.
   2. With the scan tool, record all Freeze frame data.
   3. With the scan tool, erase DTCs.
   4. Turn the ignition off for 75 seconds.
   5. Turn the ignition on.
   6. With the scan tool, read DTCs.

   Did the DTC reset?

   Yes

   - Go To 2.

   No

- Perform the INTERMITTENT CONDITION diagnostic procedure. Refer to **INTERMITTENT CONDITION - 6.7L** .

2. **CHECK THE (K615) INLET AIR TEMPERATURE SENSOR SIGNAL CIRCUIT FOR A SHORT TO VOLTAGE**

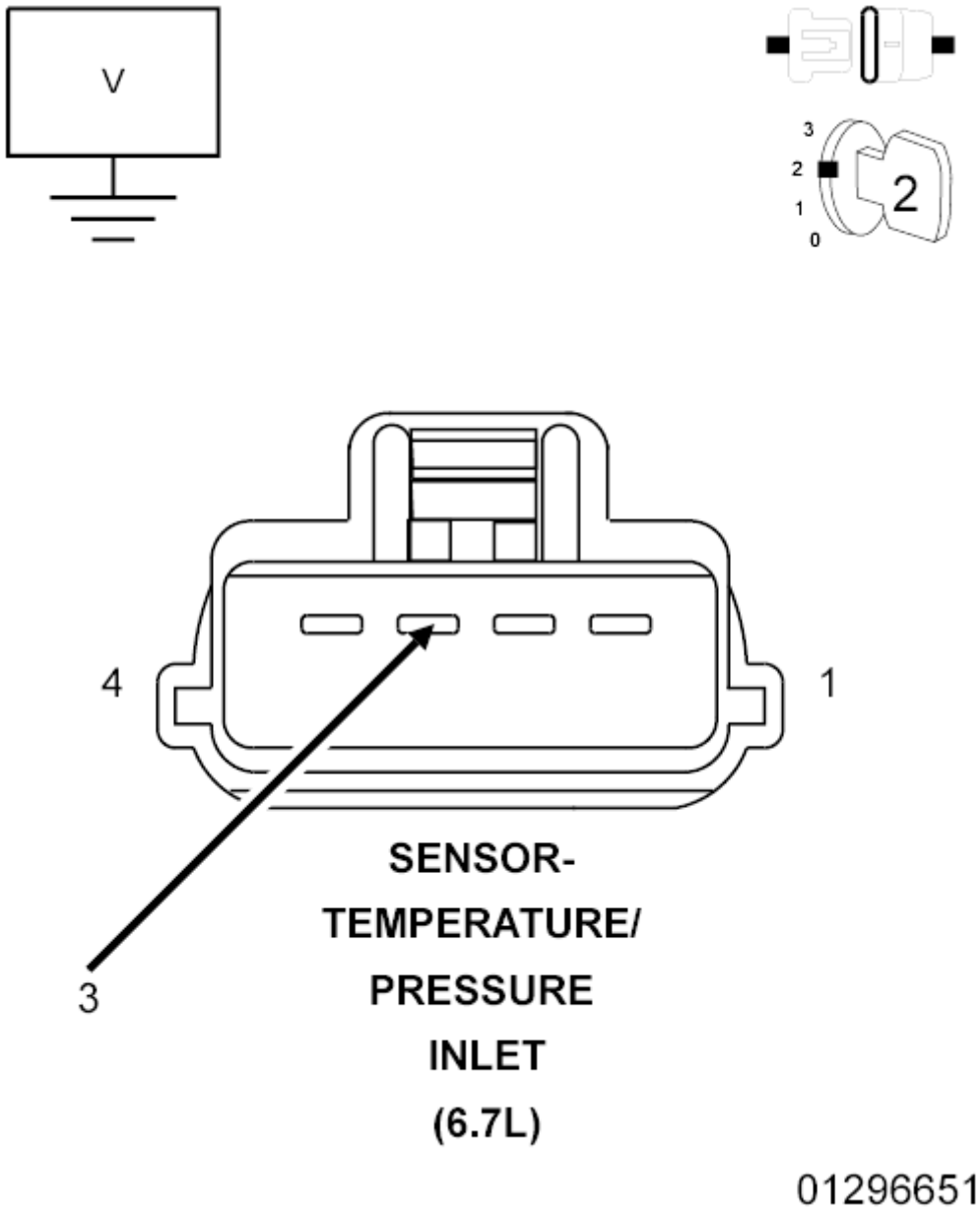

Fig. 5: Checking Inlet Air Temperature Sensor Signal Circuit For Short To Voltage
Courtesy of CHRYSLER GROUP, LLC

1. Turn the ignition off.
2. Disconnect the Inlet Air Temperature/Pressure Sensor harness connector.

NOTE: Check connectors - Clean/repair as necessary.

3. Turn the ignition on.
4. Measure the voltage on the (K615) Inlet Air Temperature Sensor Signal circuit at the Inlet Air Temperature/Pressure Sensor harness connector.

   Does the voltage measure battery voltage?

   Yes

   - Repair the (K615) Inlet Air Temperature Sensor Signal circuit for a short to voltage.
   - Perform the POWERTRAIN VERIFICATION TEST. Refer to **POWERTRAIN VERIFICATION TEST - 6.7L** .

   No

   - Go To 3.

3. **CHECK THE (K615) INLET AIR TEMPERATURE SIGNAL CIRCUIT FOR AN OPEN/HIGH RESISTANCE**

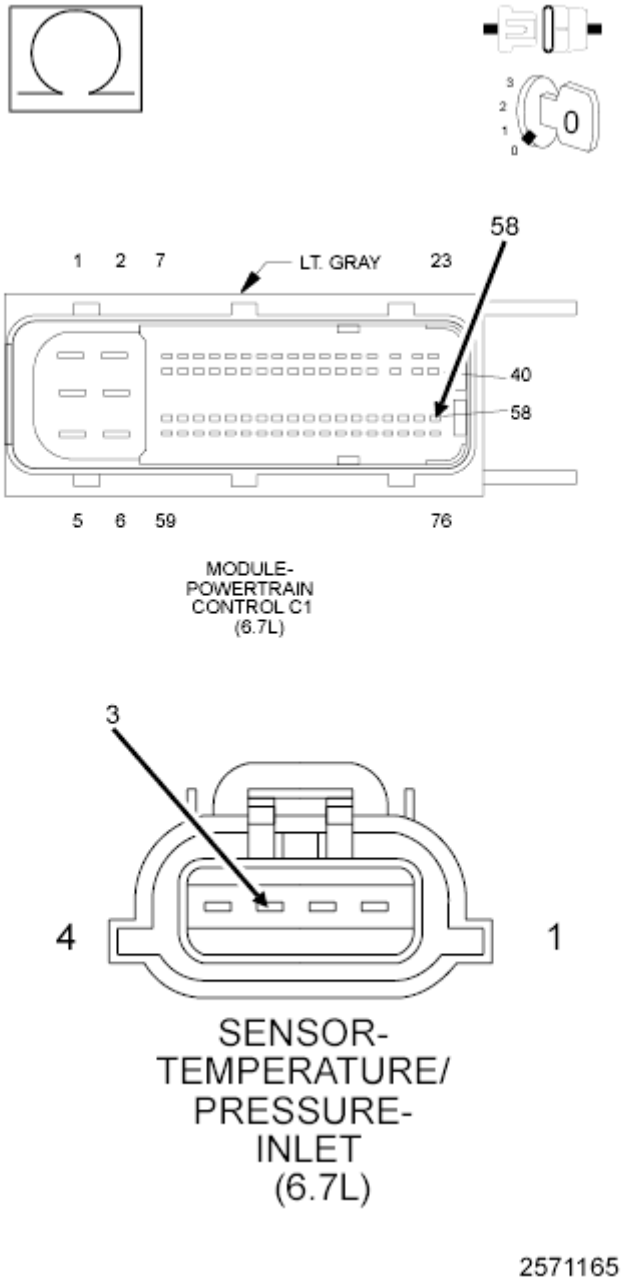

Fig. 6: Checking Inlet Air Temperature Signal Circuit For Open Or High Resistance
Courtesy of CHRYSLER GROUP, LLC

1. Disconnect the PCM C1 harness connector.
2. Measure the resistance of the (K615) Inlet Air Temperature Sensor Signal circuit between the Inlet Air Temperature/Pressure Sensor harness connector and the PCM C1 harness connector.

   Is the resistance below 5.0 Ohms?

   Yes

- Go To 4.

No

- Repair the (K615) Inlet Air Temperature Sensor Signal circuit for an open or high resistance.
- Perform the POWERTRAIN VERIFICATION TEST. Refer to **POWERTRAIN VERIFICATION TEST - 6.7L** .

4. **CHECK THE (K916) INLET AIR TEMPERATURE SENSOR GROUND CIRCUIT FOR AN OPEN/HIGH RESISTANCE**

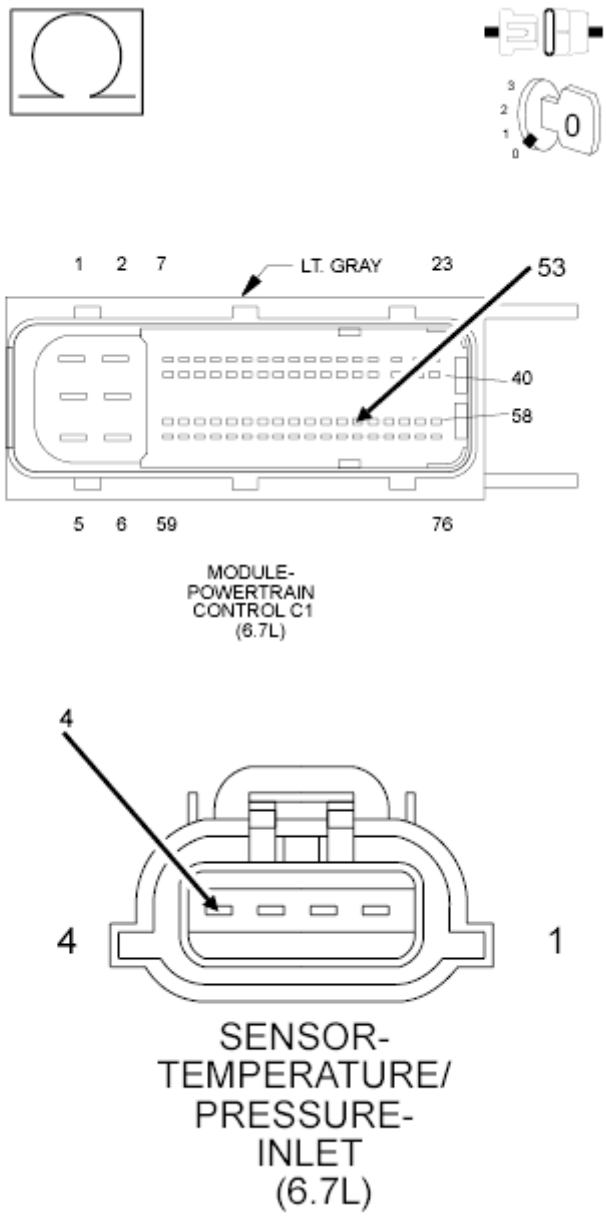

Fig. 7: Checking Inlet Air Temperature Sensor Ground Circuit For An Open Or High Resistance
Courtesy of CHRYSLER GROUP, LLC

1. Measure the resistance of the (K916) Inlet Air Temperature Sensor Ground circuit between the Inlet Air Temperature/Pressure Sensor harness connector and the PCM C1 harness connector.

   Is the resistance below 5.0 Ohms?

   Yes

   - Go To 5.

   No

   - Repair the (K916) Inlet Air Temperature Sensor Ground circuit for an open or high resistance.
   - Perform the POWERTRAIN VERIFICATION TEST. Refer to **POWERTRAIN VERIFICATION TEST - 6.7L** .

5. **CHECK THE INLET AIR TEMPERATURE/PRESSURE SENSOR**
   1. Reconnect the PCM C1 harness connector.
   2. Turn the ignition on.
   3. With the scan tool, erase DTCs.
   4. Turn the ignition off.
   5. Connect a jumper between the (K615) Inlet Air Temperature Sensor Signal circuit and the (K916) Inlet Air Temperature/Pressure Sensor Ground circuit at the Inlet Air Temperature/Pressure Sensor harness connector.
   6. Turn the ignition on.
   7. With the scan tool, read DTCs.

      Did the DTC P1192 set?

      Yes

      - Replace the Inlet Air Temperature/Pressure Sensor in accordance with the service information.
      - Perform the POWERTRAIN VERIFICATION TEST. Refer to **POWERTRAIN VERIFICATION TEST - 6.7L** .

      No

      - Replace the Powertrain Control Module in accordance with the service information.
      - Perform the POWERTRAIN VERIFICATION TEST. Refer to **POWERTRAIN VERIFICATION TEST - 6.7L** .

P1451-DIESEL PARTICULATE FILTER SYSTEM PERFORMANCE

For a complete wiring diagram, **refer to appropriate SYSTEM WIRING DIAGRAMS article** .

THEORY OF OPERATION

The Powertrain Control Module (PCM) monitors the soot load in the Diesel Particulate Filter. The soot load in the Diesel Particulate Filter is estimated by the PCM using the Exhaust Differential Pressure Sensor values and the calculated soot output of the engine. Under normal operating conditions the Diesel Particulate Filter is self-cleaning, where accumulated soot is converted to ash. Under light load operating conditions, the driver may be notified via the vehicle's EVIC message center that it is necessary to modify the vehicles driving routine/duty-cycle (see Owner's Manual for details) in order to allow the Aftertreatment Diesel Particulate Filter system to self clean. There is not a MIL lamp associated with this fault code, though the driver will be notified via the EVIC message.

WHEN MONITORED:

Engine running.

SET CONDITION:

The Powertrain Control Module (PCM) will set this fault if it detects that the soot level has exceeded the normal desoot trigger threshold by a sufficient amount to indicate that the driver intervention is required.

POSSIBLE CAUSES

Possible Causes
ENGINE HAS BEEN OPERATING IN LIGHT LOAD CONDITIONS THAT PREVENT EXHAUST TEMPERATURES FROM BEING HIGH ENOUGH TO ACTIVELY REGENERATE THE DIESEL PARTICULATE FILTER
PROGRESSIVE DAMAGE TO THE AFTERTREATMENT SYSTEM FROM AN ENGINE FAILURE, INCLUDING BUT NOT LIMITED TO EXCESSIVE FUEL, OIL OR COOLANT IN THE AFTERTREATMENT SYSTEM
EXHAUST PRESSURE SENSOR TUBES OR HOSES DAMAGED OR RESTRICTED
EXHAUST LEAK PREVENTING DIESEL PARTICULATE FILTER REGENERATION TEMPERATURES FROM BEING ACHIEVED

Always perform the Pre-Diagnostic Troubleshooting procedure before proceeding. Refer to PRE-DIAGNOSTIC TROUBLESHOOTING PROCEDURE - 6.7L .

DIAGNOSTIC TEST

1. **ACTIVE OR STORED DTC**

NOTE: **DTC P1451 is usually the result of a driveability or fuel system failure. This DTC indicates that there is an excessive soot level in the Diesel Particulate Filter, and that the Diesel Particulate Filter needs to be regenerated. This can be caused by the customers driving habits, (not allowing the vehicle to actively regenerate the Diesel Particulate Filter on it's own), or due to a driveability concern causing excessive soot generation in the exhaust system. If there are any other DTCs or driveability concerns present with**

this DTC, diagnose and repair those concerns before continuing with this test procedure. Not repairing the cause of the excess soot being generated will cause the soot levels to climb too rapidly and the Diesel Particulate Filter to fill with soot too often. This DTC will return prematurely.

1. Ignition on, engine not running.
2. With the scan tool, read DTCs.

   Is the DTC Active or Stored?

   Active

   - Perform the scan tool initiated Stationary Desoot. Refer to **FILTER, DIESEL PARTICULATE, STANDARD PROCEDURE** .

     NOTE: The Mobile Desoot procedure has been replaced by a scan tool initiated Stationary Desoot procedure. The scan tool initiated Stationary Desoot procedure can only be performed if the DTC is active and the PCM is at the latest software version.

   - Go To 2.

   Stored

   - The Aftertreatment Diesel Particulate Filter has been regenerated with an active desoot initiated during normal driving conditions.
   - Perform the DIESEL AFTERTREATMENT VALIDATION - 6.7L. Refer to **DIESEL AFTERTREATMENT VALIDATION- 6.7L** .

2. **PERFORM THE AFTERTREATMENT INSPECTION**
   1. Perform the AFTERTREATMENT INSPECTION GUIDELINE - 6.7L procedure. Refer to **DIAGNOSIS AND TESTING, 6.7L** .

      Did the Diesel Particulate Filter pass inspection?

      Yes

      - Repair complete. Reset DPF timer, ensure all other fault codes have been addressed.
      - Perform the DIESEL AFTERTREATMENT VALIDATION - 6.7L procedure. Refer to **DIESEL AFTERTREATMENT VALIDATION- 6.7L** .

      No

      - Replace the Diesel Particulate Filter in accordance with the service information.
      - Perform the DIESEL AFTERTREATMENT VALIDATION - 6.7L procedure. Refer to **DIESEL AFTERTREATMENT VALIDATION- 6.7L** .

P1484-CATALYST OVERHEAT DETECTION

For a complete wiring diagram, **refer to appropriate SYSTEM WIRING DIAGRAMS article** .

THEORY OF OPERATION

The Aftertreatment Diesel Oxidation Catalyst is designed to react with hydrocarbons in the exhaust stream, this reaction produces heat. The heat can become excessive if too much hydrocarbon enters the Aftertreatment Diesel Oxidation Catalyst too quickly. Excessive heat can damage the diesel aftertreatment components, so the temperature of the aftertreatment system is closely monitored by the Powertrain Control Module (PCM). The Exhaust Temperature Sensors are used by the PCM to monitor the temperatures throughout the aftertreatment system. The Exhaust Temperature Sensors are thermistors and change resistance based on the temperature being measured. The PCM provides a calibrated reference voltage to the sensor. The PCM monitors the voltage on the signal pin and converts this to a temperature value. When the exhaust gas temperature is cold, the sensor or thermistor resistance is high. The PCM signal voltage only pulls down a small amount through the sensor to ground. Therefore, the PCM senses a high signal voltage or low temperature. When the exhaust gas temperature is hot, the sensor resistance is low. The signal voltage pulls down a large amount. Therefore, the PCM senses a low signal voltage, or a high temperature. The PCM will illuminate the MIL lamp immediately when the diagnostic runs and fails. The PCM will also disable active regeneration of the aftertreatment diesel particulate filter. This DTC will not self clear and must be cleared by a scan tool.

WHEN MONITORED:

With the ignition on.

SET CONDITION:

The Powertrain Control Module (PCM) detects that the Exhaust Temperature Sensor 1/1 temperature is greater than calibrated temperature for longer than a calibrated time.

POSSIBLE CAUSES

Possible Causes
FAULTY FUEL INJECTOR CAUSING EXCESSIVE UNBURNED FUEL TO ENTER THE EXHAUST SYSTEM
IMPROPER FUELING
TEMPERATURE SENSORS FAILED IN-RANGE
EXCESSIVE ENGINE OIL BEING INTRODUCED INTO THE AFTERTREATMENT SYSTEM FROM THE ENGINE

Always perform the Pre-Diagnostic Troubleshooting procedure before proceeding. Refer to PRE-DIAGNOSTIC TROUBLESHOOTING PROCEDURE - 6.7L .

DIAGNOSTIC TEST

1. **CHECK THE EXHAUST TEMPERATURE SENSORS**
    1. Turn the ignition off for five minutes to allow the Exhaust Temperature Sensors to stabilize.

2. Turn the ignition on, engine not running.
3. With the scan tool check the temperature values of the Exhaust Temperature Sensors.

   Are the Exhaust Temperature Sensors reading within 6°C (43°F) of each other?

   Yes

   - Go To 2.

   No

   - Replace the Exhaust Temperature Sensor that is out of range as compared to the others.
   - Perform the POWERTRAIN VERIFICATION TEST. Refer to **POWERTRAIN VERIFICATION TEST - 6.7L** .

2. **CHECK FOR EXCESSIVE ENGINE OIL BEING INTRODUCED INTO THE AFTERTREATMENT SYSTEM**
   1. Remove the turbocharger outlet and inspect for signs of oil, fuel or moisture being introduced into the Aftertreatment system from the engine.

      Was engine oil, fuel or moisture found in the turbocharger exhaust outlet?

      Yes

      - Locate the cause of possible diesel fuel or engine oil being carried from the engine into the Exhaust system. Inspect the Exhaust for possible damage.
      - Perform the POWERTRAIN VERIFICATION TEST. Refer to **POWERTRAIN VERIFICATION TEST - 6.7L** .

      No

      - Go To 3.

3. **CHECK ENGINE/FUEL SYSTEM PERFORMANCE**
   1. Perform the CHECKING ENGINE MISFIRE / RUNS ROUGH / PERFORMANCE TEST diagnostic procedure. Refer to **DIAGNOSIS AND TESTING, 6.7L** .

      Were any problems found?

      Yes

      - Perform the appropriate repair.
      - Perform the POWERTRAIN VERIFICATION TEST. Refer to **POWERTRAIN VERIFICATION TEST - 6.7L** .

      No

- Perform the INTERMITTENT CONDITION diagnostic procedure. Refer to **INTERMITTENT CONDITION - 6.7L** .

P1507-CRANKCASE FILTER RESTRICTION

For a complete wiring diagram, **refer to appropriate SYSTEM WIRING DIAGRAMS article** .

THEORY OF OPERATION

The crankcase pressure sensor is used to monitor the pressure inside the crankcase. The Powertrain Control Module (PCM) supplies the Crankcase Pressure Sensor a 5-Volt reference voltage. When the crankcase pressure is low, the sensor signal voltage is low. When the crankcase pressure is high, the sensor signal voltage is near the 5-Volt reference voltage. The PCM monitors the Crankcase Pressure Signal Circuit voltage to calculate the pressure of the air within the crankcase. The PCM will illuminate the MIL lamp after the monitor runs and fails in two consecutive trips.

WHEN MONITORED:

Engine speed greater than 500 RPM and engine temperature is above 82°C (180°F) for five minutes.

SET CONDITION:

The Powertrain Control Module (PCM) detects the crankcase pressure exceeds a calibrated limit.

POSSIBLE CAUSES

Possible Causes
OBSTRUCTIONS IN CRANKCASE HOSES
CLOSED CRANKCASE VENTILATION (CCV) FILTER
CRANKCASE DEPRESSION REGULATION (CDR) VALVE

Always perform the Pre-Diagnostic Troubleshooting procedure before proceeding. Refer to PRE-DIAGNOSTIC TROUBLESHOOTING PROCEDURE - 6.7L .

DIAGNOSTIC TEST

1. **CHECK THE CRANKCASE VENTILATION HOSE**
    1. Disconnect the crankcase ventilation hose from the breather cover and compressor inlet plumbing.
    2. Blow regulated shop air, less than or equal to 5.0 psi through the hose.

    Are there any obstructions in the crankcase outlet hose?

    Yes

    - Clear the obstructions.
    - Go To 2.

No

- Go To 2.

2. **CRANKCASE DEPRESSION REGULATION VALVE**
   1. Remove the breather cover.
   2. Blow regulated shop air, less than or equal to 5.0 psi through the CDR Valve.

   NOTE: The air can be applied at either the inlet or outlet of the valve.

   Is the Crankcase Depression Valve stuck shut?

   Yes

   - Replace the CDR Valve:
   - Go To 3.

   No

   - Go To 3.

3. **CCV FILTER ELEMENT**
   1. Ignition on, engine not running.
   2. With the scan tool, read DTCs.

   Were there any obstructions in the crankcase hose and/or CDR Valve?

   Yes

   - Test complete.
   - Turn the ignition off and wait for the PCM to power down (this will take 10 minutes). Turn the ignition on. With the scan tool, erase the DTC.
   - Perform the POWERTRAIN VERIFICATION TEST. Refer to **POWERTRAIN VERIFICATION TEST - 6.7L** .

   No

   - Replace the CCV Filter Element.
   - Turn the ignition off and wait for the PCM to power down (this will take 10 minutes). Turn the ignition on. With the scan tool, erase the DTC.
   - Perform the POWERTRAIN VERIFICATION TEST. Refer to **POWERTRAIN VERIFICATION TEST - 6.7L** .

P1593-SPEED CONTROL SWITCH 1 STUCK

For a complete wiring diagram, **refer to appropriate SYSTEM WIRING DIAGRAMS article** .

WHEN MONITORED:

With the ignition on.

SET CONDITION:

Cruise Switch inputs are not coherent with each other. Example: The Powertrain Control Module (PCM) is reading Switch No. 1 as Accel and Switch No. 2 as Coast at the same time. One trip fault.

POSSIBLE CAUSES

Possible Causes
S/C SWITCH SIGNAL CIRCUITS SHORTED TO VOLTAGE
RESISTANCE IN THE S/C SWITCH SIGNAL CIRCUITS
RESISTANCE IN THE (V937) S/C SWITCH RETURN CIRCUIT
S/C SWITCH SIGNAL CIRCUITS SHORTED TO THE (V937) S/C SWITCH RETURN CIRCUIT
(V37) S/C SWITCH NO. 1 SIGNAL CIRCUIT SHORTED TO THE (V38) S/C SWITCH NO. 2 SIGNAL CIRCUIT
S/C SWITCH SIGNAL CIRCUITS SHORTED TO GROUND
CLOCKSPRING
SPEED CONTROL SWITCH
POWERTRAIN CONTROL MODULE (PCM)

Always perform the Pre-Diagnostic Troubleshooting procedure before proceeding. Refer to PRE-DIAGNOSTIC TROUBLESHOOTING PROCEDURE - 6.7L .

DIAGNOSTIC TEST

1. **ACTIVE DIAGNOSTIC TROUBLE CODE (DTC)**
    1. Ignition on, engine not running.

        NOTE: This DTC may be the result of pressing two Speed Control Switch buttons simultaneously for more than 450 msec.

    2. Ask the customer if it is possible that two buttons were pressed at the same time before this DTC set. If this is the case, no repair is necessary.

        Is the DTC Active at this time?

        Yes

        - Go To 2.

        No

- Perform the INTERMITTENT CONDITION diagnostic procedure. Refer to **INTERMITTENT CONDITION - 6.7L** .

2. **SPEED CONTROL SWITCHES**
    1. Turn the ignition off.
    2. Disconnect the Speed Control Switch harness connector in accordance with the service information.
    3. Measure the resistance across each Speed Control Switch sense circuit.
    4. Monitor the Ohmmeter while pressing each function button.
    5. The following resistance specs are taken between terminals (V37) S/C Switch Sense 1 circuit and the (V937) Switch Return circuit of the switch when holding the switch button in the following position:
        - Not pressing any switch - 20.5k Ohms
        - On/Off - 0.47k Ohms
        - Set/Decel - 4.34k Ohms
        - Cancel - 1.24k Ohms
        - Resume/Accel - 8.80k Ohms
    6. The following resistance specs are taken between terminals (V38) S/C Switch Sense 2 circuit and the (V937) Switch Return circuit of the switch when holding the switch button in the following position:
        - Not pressing any switch - 20.5k Ohms
        - On/Off - 6.2k Ohms
        - Set/Decel - 0.79k Ohms
        - Cancel - 3.2k Ohms
        - Resume/Accel - 1. k Ohms

    Does the function on the Speed Control Switch have the correct resistance value +/- 0.2 Ohm?

    Yes

    - Go To 3.

    No

    - Replace the Speed Control Switch.
    - Perform the POWERTRAIN VERIFICATION TEST. Refer to **POWERTRAIN VERIFICATION TEST - 6.7L** .

3. **S/C SWITCH SIGNAL CIRCUIT SHORTED TO VOLTAGE**

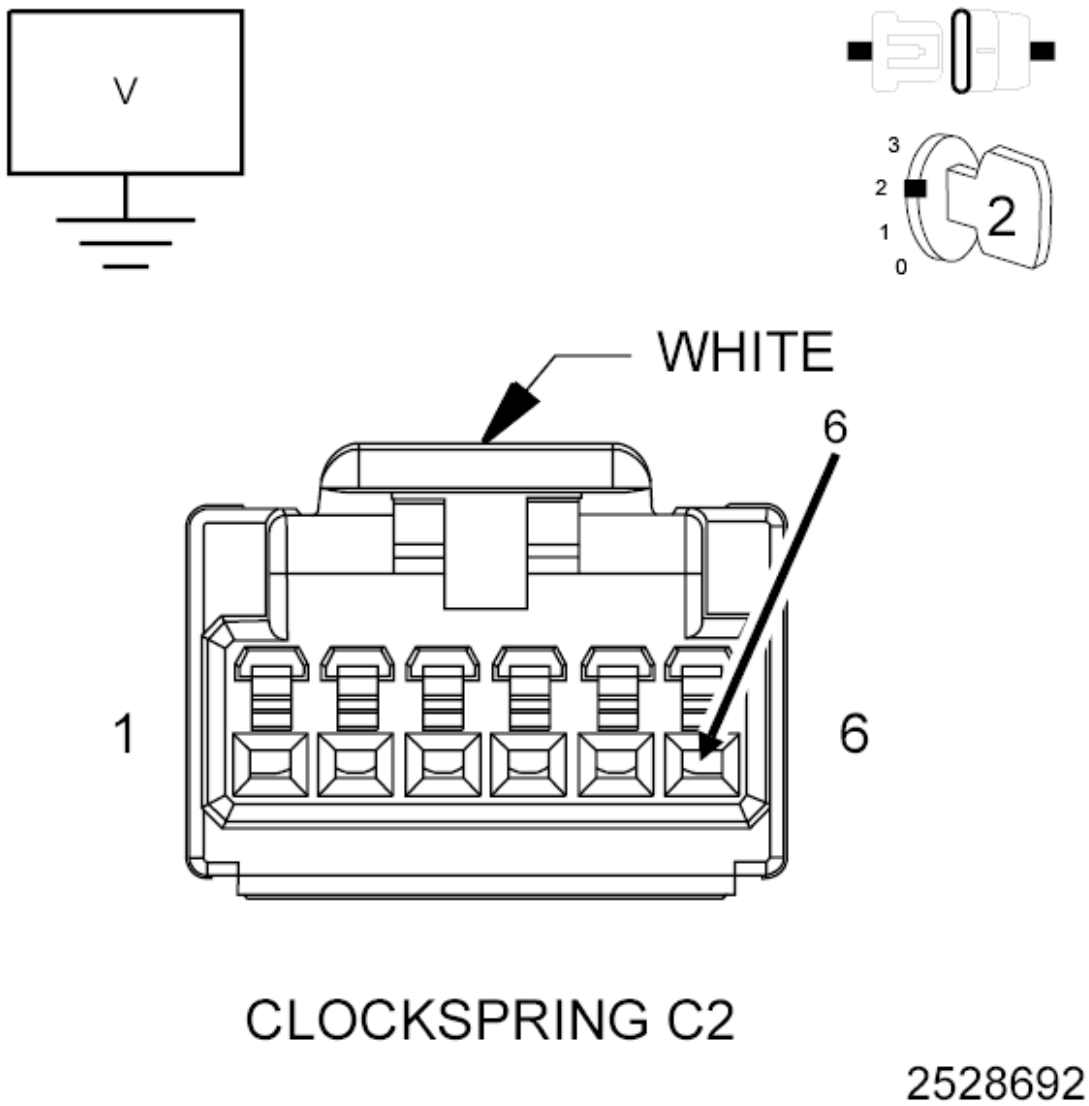

Fig. 8: Measuring Voltage On S/C Switch Sense Circuits In Clockspring Harness Connector
Courtesy of CHRYSLER GROUP, LLC

1. Disconnect the Clockspring C2 harness connector in accordance with the Service Information.
2. Turn the ignition on.
3. Measure the voltage on the (V37) and (V38) S/C Switch Sense circuits in the Clockspring C2 harness connector.

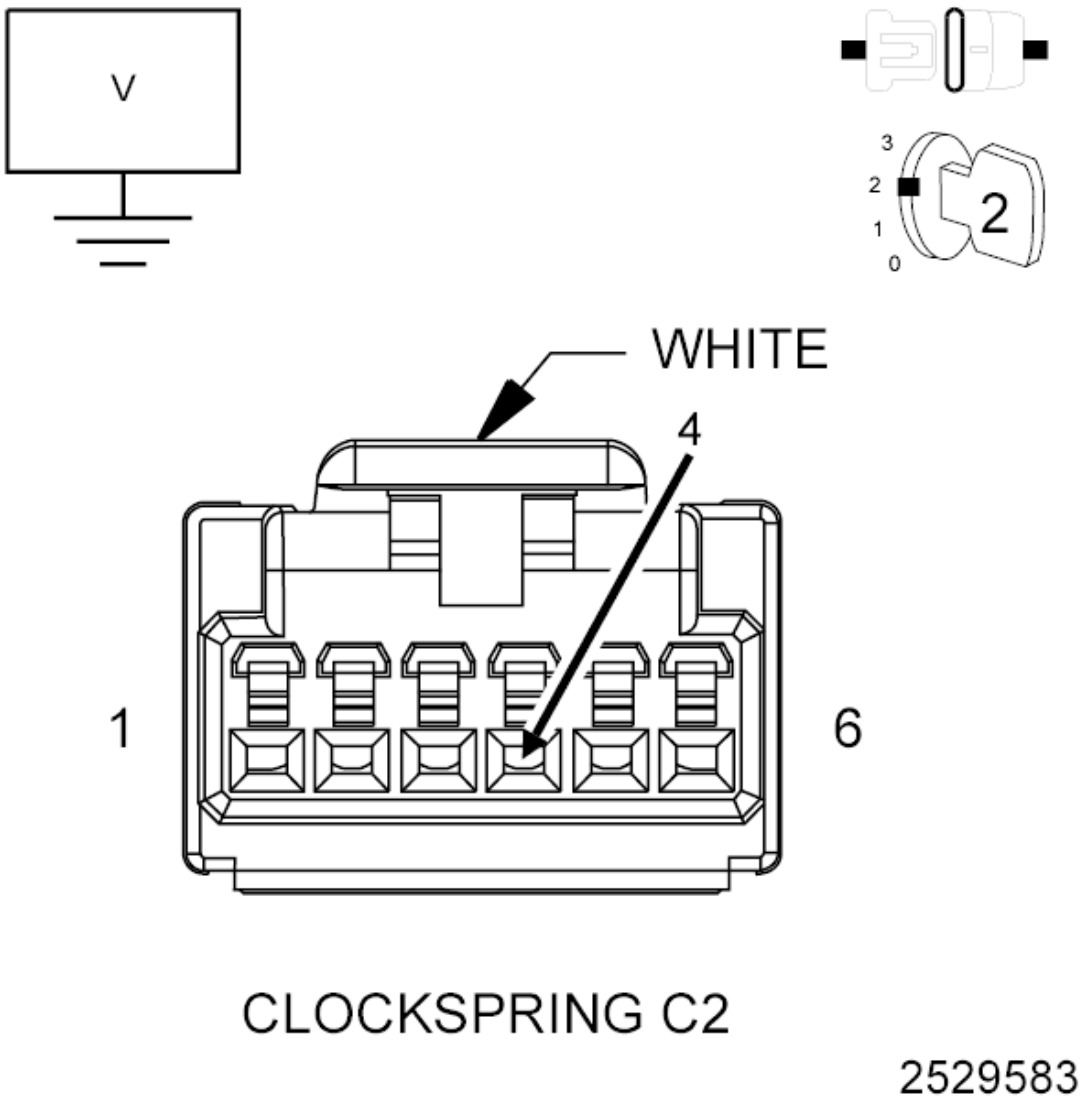

Fig. 9: Measuring Voltage On S/C Switch Sense Circuit In Clockspring C2 Harness Connector
Courtesy of CHRYSLER GROUP, LLC

Is the voltage reading above 5.2 volts for either circuit?

Yes

- Repair the short to voltage in the (V37) or (V38) S/C Switch Sense circuit.
- Perform the POWERTRAIN VERIFICATION TEST. Refer to **POWERTRAIN VERIFICATION TEST - 6.7L** .

No

- Go To 4.

4. **S/C SWITCH SENSE CIRCUIT SHORTED TO GROUND**

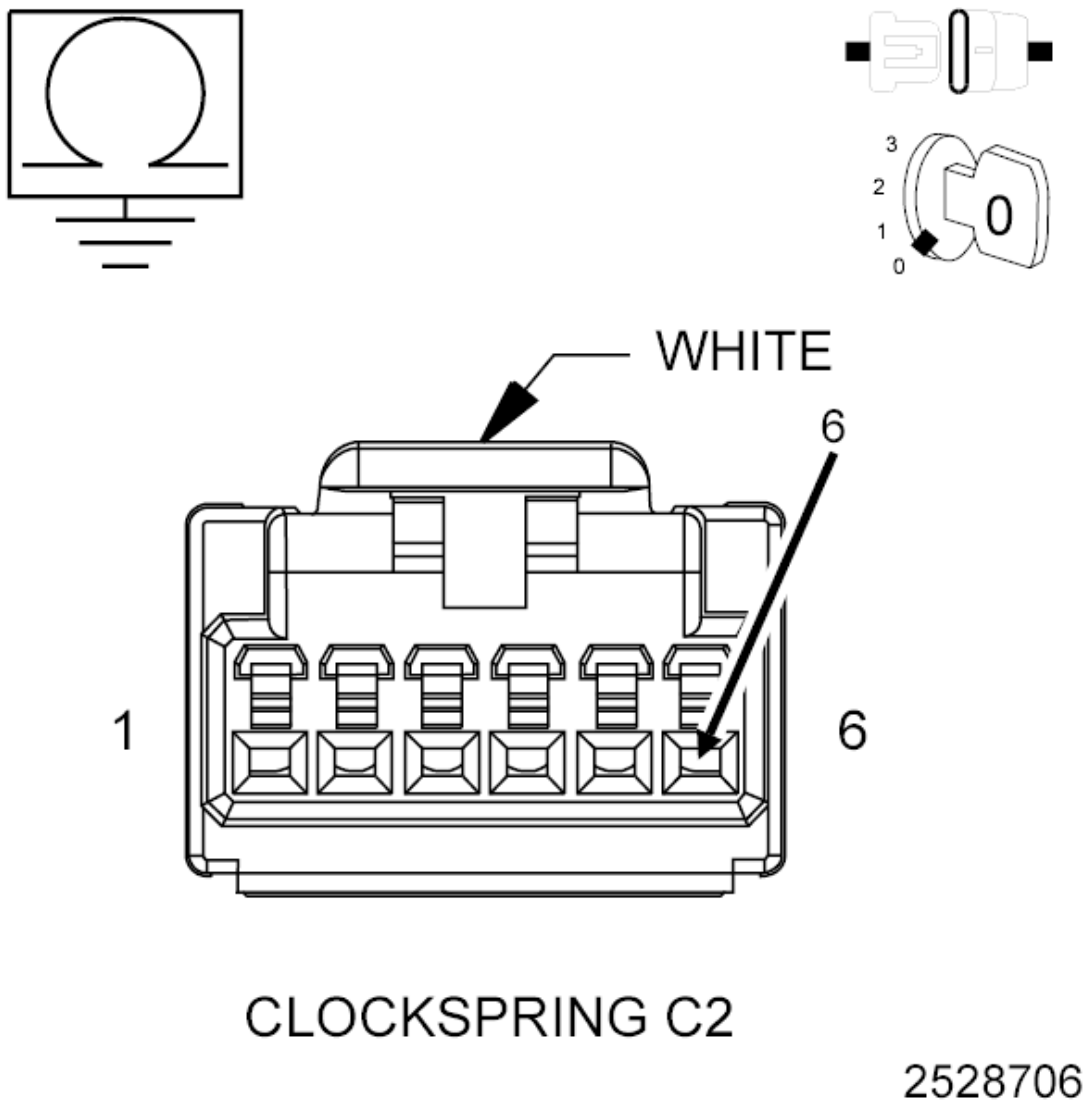

Fig. 10: Measuring Resistance Between Ground And S/C Switch Sense Circuit In SCM Harness Connector
Courtesy of CHRYSLER GROUP, LLC

1. Turn the ignition off.
2. Disconnect the PCM C2 harness connector.
3. Measure the resistance between ground and the (V37) S/C Switch Sense 1 circuit in the Clockspring C2 harness connector.

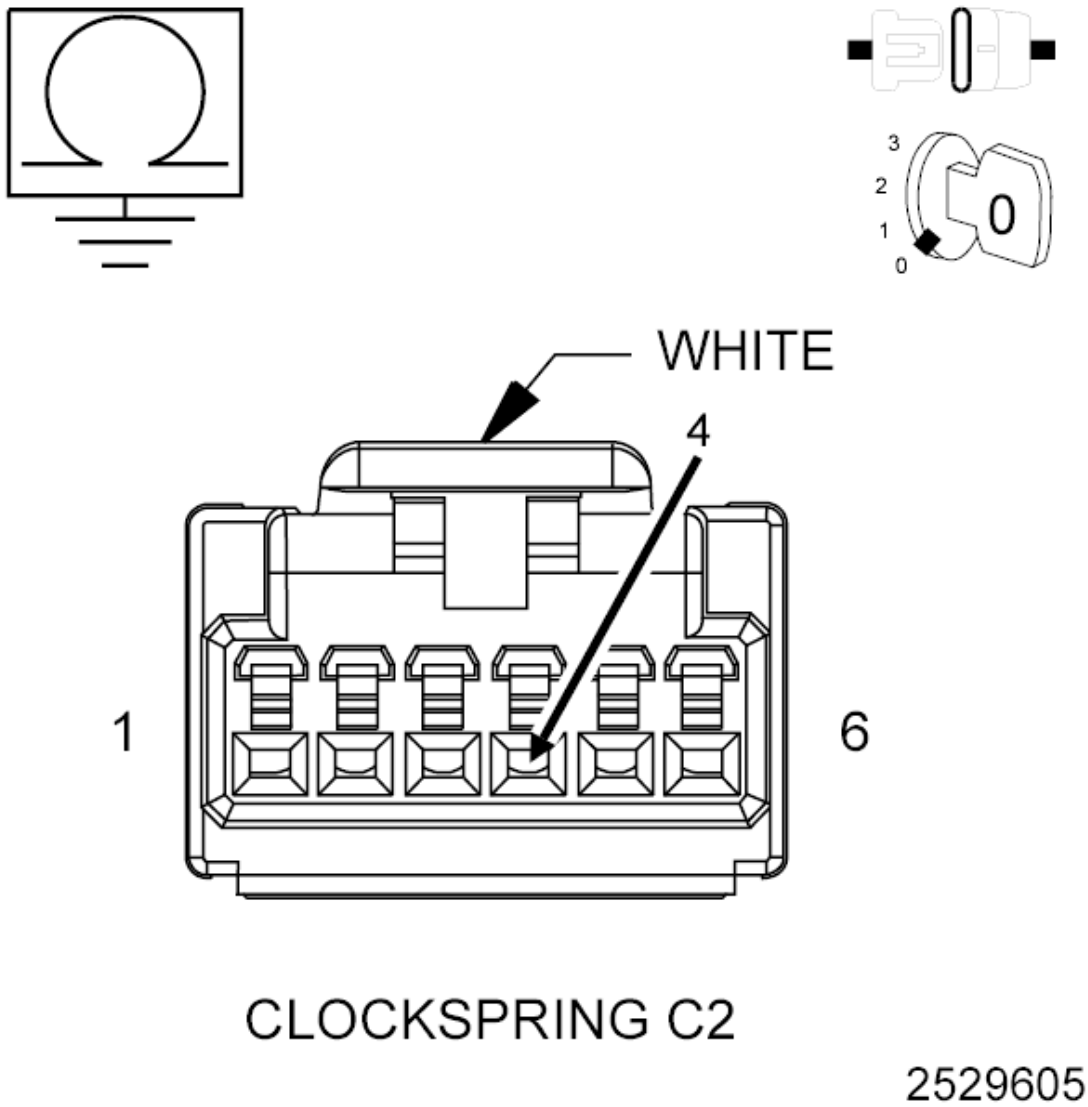

Fig. 11: Measuring Resistance Between Ground And (V72) S/C Switch Sense 2 Circuit In Clockspring C2 Harness Connector
Courtesy of CHRYSLER GROUP, LLC

4. Measure the resistance between ground and the (V38) S/C Switch Sense 2 circuit in the Clockspring C2 harness connector.

   Is the resistance above 10k Ohms?

   Yes

   - Go To 5.

   No

   - Repair the short to ground in the (V37) or (V38) S/C Switch Sense circuit.

- Perform the POWERTRAIN VERIFICATION TEST. Refer to **POWERTRAIN VERIFICATION TEST - 6.7L** .

5. **S/C SWITCH SENSE CIRCUIT SHORTED TO THE (V937) S/C SWITCH RETURN CIRCUIT**

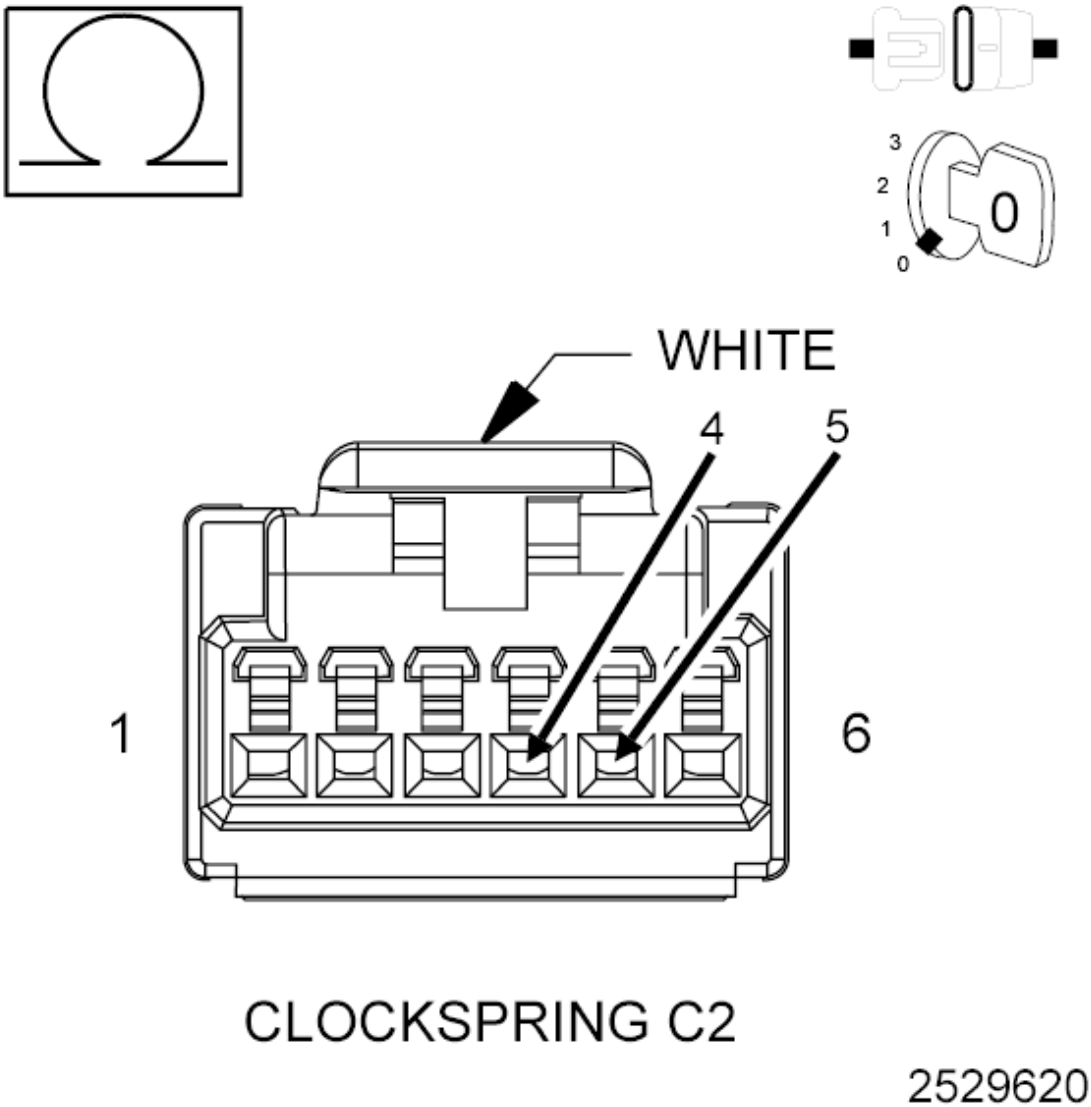

Fig. 12: Measuring Resistance Between S/C Switch Sense Circuit And S/C Switch Return Circuit In Clockspring C2 Harness Connector
Courtesy of CHRYSLER GROUP, LLC

1. Measure the resistance between the (V37) S/C Switch Sense circuit and the (V937) S/C Switch Return circuit in the Clockspring C2 harness connector.

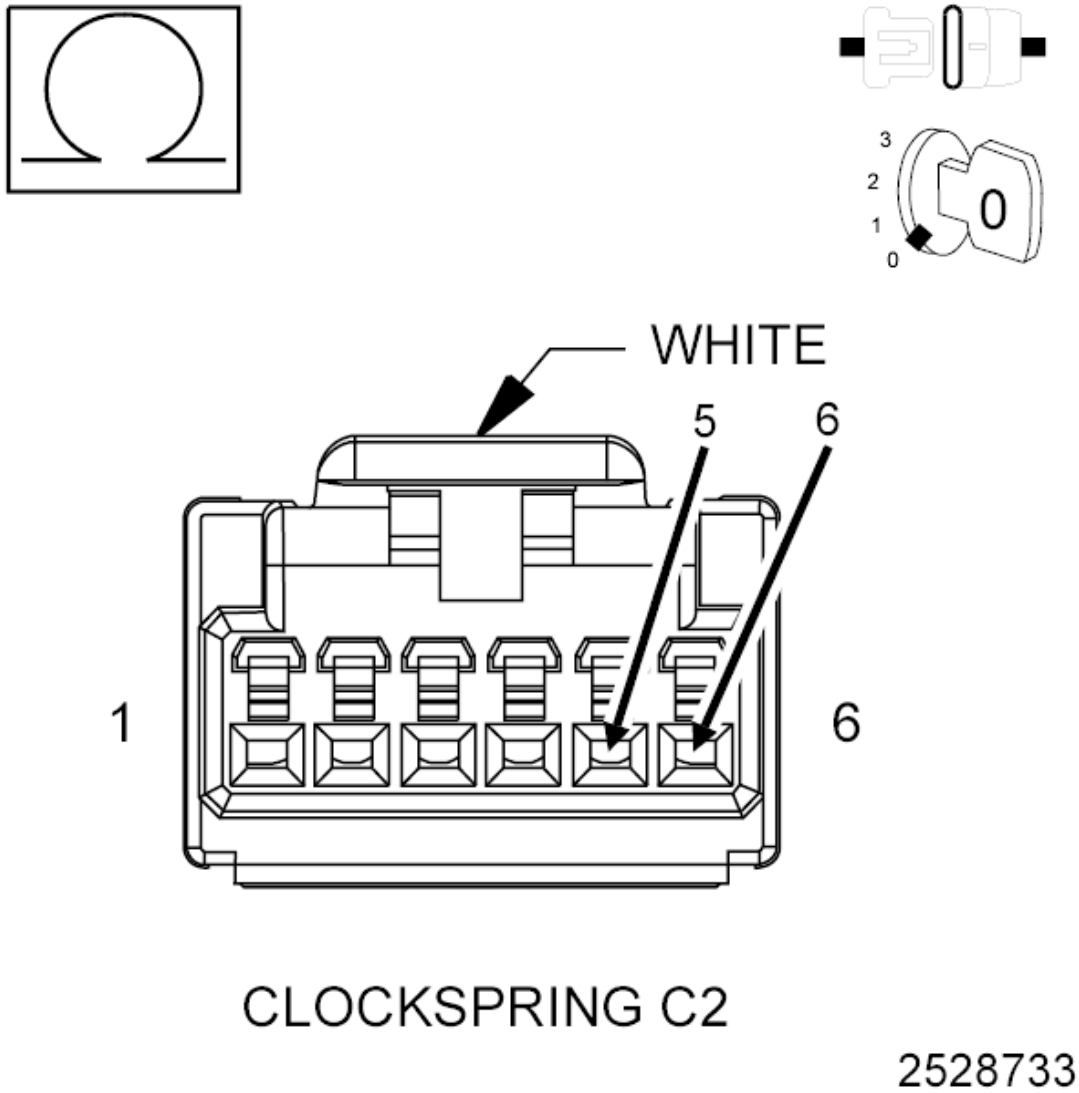

Fig. 13: Measuring Resistance Between S/C Switch Sense Circuit And S/C Switch Return Circuit In Clockspring C2 Harness Connector
Courtesy of CHRYSLER GROUP, LLC

2. Measure the resistance between the (V38) S/C Switch Sense circuit and the (V937) S/C Switch Return circuit in the Clockspring C2 harness connector.

   Is the resistance above 10k Ohms?

   Yes

   - Go To 6.

   No

   - Repair the short between the (V37) or (V38) S/C Switch Sense circuit and the (V937) Switch

Return circuit.

- Perform the POWERTRAIN VERIFICATION TEST. Refer to **POWERTRAIN VERIFICATION TEST - 6.7L** .

6. **CLOCKSPRING**
    1. Disconnect the Clockspring C8 harness connector.
    2. Measure the resistance of the (V37) S/C Switch Sense 1 circuit between the Clockspring C2 and C8 on the Clockspring.
    3. Measure the resistance of the (V38) S/C Switch Sense 2 circuit between the Clockspring C2 and C8 on the Clockspring.
    4. Measure the resistance of the (V937) Switch Return circuit between the Clockspring C2 and C8 on the Clockspring.

    Is the resistance above 5.0 Ohms for any of the circuits?

    Yes

    - Replace the Clockspring in accordance with the service information.
    - Perform the POWERTRAIN VERIFICATION TEST. Refer to **POWERTRAIN VERIFICATION TEST - 6.7L** .

    No

    - Go To 7.

7. **STEERING WHEEL JUMPER HARNESS**

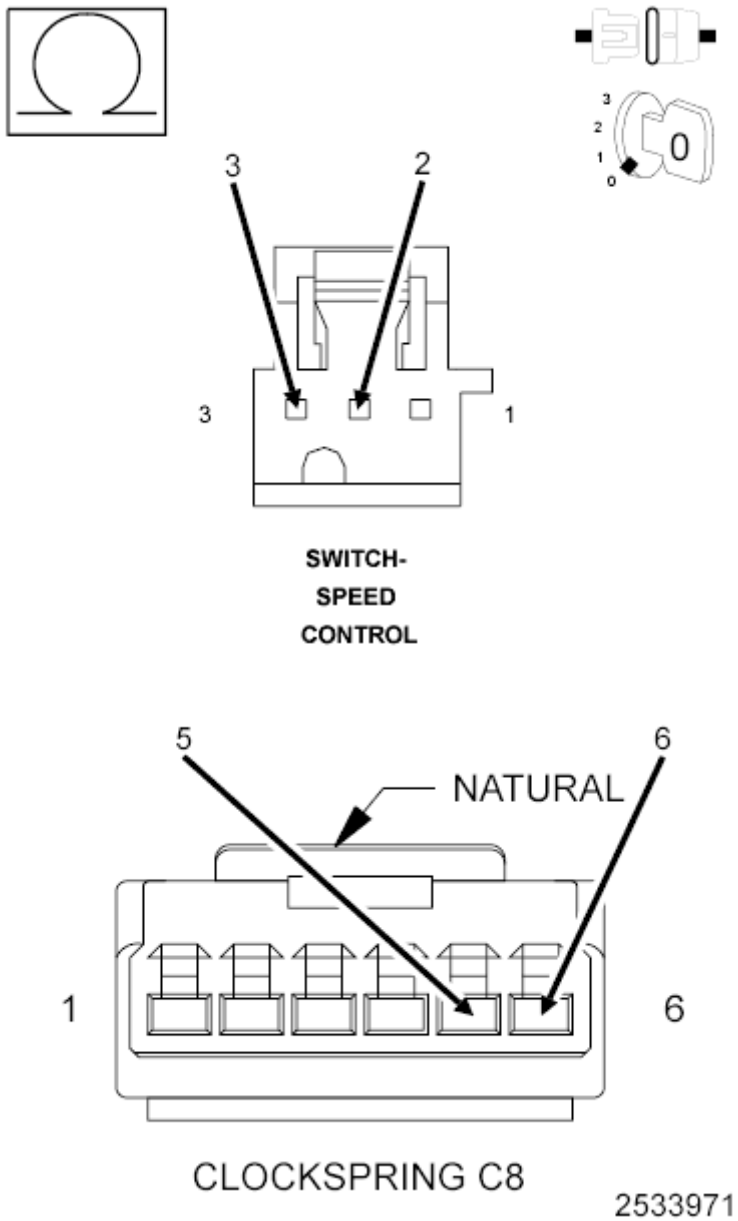

Fig. 14: Measuring Resistance Of S/C Switch Sense 1 Circuit Switch Return Circuit Between Clockspring Harness Connector And S/C Switch Harness Connector
Courtesy of CHRYSLER GROUP, LLC

1. Measure the resistance of the (V37) S/C Switch Sense 1 circuit between the Clockspring C8 harness connector and S/C Switch harness connector.
2. Measure the resistance of the (V38) S/C Switch Sense 2 circuit between the Clockspring C8 harness connector and S/C Switch harness connector.
3. Measure the resistance of the (V937) Switch Return circuit between the Clockspring C8 harness connector and S/C Switch harness connector.

   Is the resistance above 5.0 Ohms for any of the circuits?

Yes

- Replace the Steering Wheel Jumper harness in accordance with the service information.
- Perform the POWERTRAIN VERIFICATION TEST. Refer to **POWERTRAIN VERIFICATION TEST - 6.7L** .

No

- Go To 8.

8. **S/C SWITCH SENSE CIRCUIT OPEN**
   1. Reconnect the PCM C2 harness connector.
   2. Measure the resistance of the (V37) and (V38) S/C Switch Sense circuits between the Clockspring C2 harness connector and the PCM C2 harness connector.

      Is the resistance below 5.0 Ohms for each measurement?

      Yes

      - Go To 9.

      No

      - Repair the excessive resistance in the (V37) or (V38) S/C Switch Sense circuit.
      - Perform the POWERTRAIN VERIFICATION TEST. Refer to **POWERTRAIN VERIFICATION TEST - 6.7L** .
9. **(V937) S/C SWITCH RETURN CIRCUIT OPEN**
   1. Measure the resistance of the (V937) S/C Switch Return circuit between the Clockspring C2 harness connector and the PCM C2 harness connector.

      Is the resistance below 5.0 Ohms?

      Yes

      - Go To 10.

      No

      - Repair the excessive resistance in the (V937) S/C Switch Return circuit.
      - Perform the POWERTRAIN VERIFICATION TEST. Refer to **POWERTRAIN VERIFICATION TEST - 6.7L** .
10. **SPEED CONTROL SWITCH VOLTAGE VALUES**
    1. Reconnect the Speed Control Switch harness connector.
    2. Reconnect the Clockspring harness connectors.
    3. Reconnect the PCM C2 harness connector.

4. Back probe the (V37) S/C Switch Sense 1 circuit and the (V38) S/C Switch Sense 2 circuit at the PCM C2 harness connector.

CAUTION: Use only approved back probe tools when back probing a connector so as not to cause damage to the terminals or insulation of the connector. Damage to the terminals can cause poor terminal contact or retention. Damage to the insulation can introduce corrosion due to water infiltration.

5. Turn the ignition on.
6. Using the scan tool, monitor the S/C Switch voltage readings.
7. Using a Voltmeter check the voltage on the (V37) S/C Switch Sense 1 circuit and the (V38) S/C Switch Sense 2 circuit at the PCM C2 harness connector.
8. Monitor the Voltmeter.
9. Using the scan tool, monitor the S/C Switch voltage readings.

SWITCH POSITION	SWITCH No. 1 VOLTAGE VALUE	SWITCH No. 2 VOLTAGE VALUE
NO SWITCHES PRESSED	4.31 to 4.78 Volts	4.31 to 4.78 Volts
ON/OFF PRESSED	0.59 to 1.13 Volts	3.53 to 3.92 Volts
RES/ACCEL PRESSED	3.88 to 4.17 Volts	2.04 to 2.47 Volts
SET/DECEL PRESSED	3.16 to 3.56 Volts	1.17 to 1.56 Volts
CANCEL PRESSED	1.59 to 1.99 Volts	2.84 to 3.25 Volts

10. Compare the voltage readings on the Voltmeter to what the scan tool displayed.

    Are the voltage readings out of the listed specification and is there less than a 0.2 Volt difference between the Voltmeter switch values and the scan tool switch value?

    Yes

    - Replace the Speed Control Switch in accordance with the service information.
    - Perform the POWERTRAIN VERIFICATION TEST. Refer to **POWERTRAIN VERIFICATION TEST - 6.7L** .

    No

    - Go To 11.

11. **POWERTRAIN CONTROL MODULE (PCM)**
    1. Using the wiring diagram/schematic as a guide, inspect the wiring and connectors between the Speed Control Switch and the Powertrain Control Module (PCM).
    2. Look for any chafed, pierced, pinched or partially broken wires.
    3. Look for broken, bent, pushed out or corroded terminals. Verify that there is good pin to terminal

contact in the Switch and Powertrain Control Module connectors.

4. Perform any Technical Service Bulletins that may apply.

   Were there any problems found?

   Yes

   - Repair as necessary.
   - Perform the POWERTRAIN VERIFICATION TEST. Refer to **POWERTRAIN VERIFICATION TEST - 6.7L** .

   No

   - Replace and program the Powertrain Control Module in accordance with the service information. Refer to **PCM - REMOVAL** , also see **PCM/ECM / TCM PROGRAMMING** .
   - Perform the POWERTRAIN VERIFICATION TEST. Refer to **POWERTRAIN VERIFICATION TEST - 6.7L** .

P1C54-SCR NOX CATALYST MISSING

For a complete wiring diagram, **refer to appropriate SYSTEM WIRING DIAGRAMS article** .

THEORY OF OPERATION

The aftertreatment system is equipped with two NOx Sensors and modules. The upstream NOx Sensor 1/1 is located before the SCR Catalyst and is permanently connected to a corresponding NOx Sensor Module mounted on the right frame rail. The downstream NOx Sensor 1/2 is located at the outlet of the SCR Catalyst and is permanently connected to a corresponding NOx Sensor Module also mounted on the right frame rail. The NOx Sensors and NOx Sensor Modules are calibrated to each other and must be replaced as an assembly. The two NOx Sensor and Module assemblies are not interchangeable. The NOx Sensor Modules are smart devices and communicate with the Powertrain Control Module (PCM) over the J1939 Data Link. The NOx Sensor Modules perform their own internal diagnostics and report malfunctions back to the PCM. The NOx Sensors are used to monitor the efficiency of the SCR Catalyst and dosing system. The Powertrain Control Module compares the values of the NOx Sensors to monitor the efficiency of the SCR Catalyst and dosing system. The PCM will illuminate the MIL lamp immediately after the monitor runs and fails.

WHEN MONITORED:

NOx Sensor data is gathered over varying engine speeds and loads. When enough data has been gathered, the monitor will run, make a pass/fail decision, and begin to gather data again.

SET CONDITION:

The PCM determines that the NOx conversion across the SCR Catalyst is below expectations.

POSSIBLE CAUSES

Possible Causes
DEGRADED, DILUTED, OR INCORRECT DIESEL EXHAUST FLUID
DIESEL EXHAUST FLUID DEPOSITS IN THE DECOMPOSITION TUBE
EXHAUST SYSTEM LEAKS
MALFUNCTIONING DIESEL EXHAUST FLUID DOSING SYSTEM
MALFUNCTIONING SCR CATALYST

Always perform the Pre-Diagnostic Troubleshooting procedure before proceeding. Refer to PRE-DIAGNOSTIC TROUBLESHOOTING PROCEDURE - 6.7L .

DIAGNOSTIC TEST

1. **OTHER DEF SYSTEM DTCS PRESENT**
   1. Ignition on, engine not running.
   2. With the scan tool, View DTCs.

      Are there any NOx Sensor or DEF System DTCs active?

      Yes

      - Repair all other DTCs before proceeding with this test procedure.

      No

      - Go To 2.
2. **CHECK THE DIESEL EXHAUST FLUID**
   1. Turn the ignition off.

      NOTE: Repair any fuel, emissions, or DEF system component DTCs before continuing with this diagnostic procedure.

   2. Remove the DEF Filter cap and collect a sample of diesel exhaust fluid from the system.
   3. Visually inspect the fluid for signs of contamination or debris.
   4. Test the quality of the fluid using litmus paper (supplied by parts) or by using an SPX DEF/UREA Refractometer 94-F-00K-108-456 or equivalent.

      NOTE: The diesel exhaust fluid should register approximately 9 ph with the litmus paper and 32.5 percent using a refractometer.

      Is the diesel exhaust fluid quality within specification and free of debris and contamination?

      Yes

      - Go To 3.

No

- Drain the diesel exhaust fluid from the tank and fill the system. If the fluid is contaminated, follow the cleaning procedure. Refer to **TANK, DIESEL EXHAUST FLUID, CLEANING** .
- Perform the POWERTRAIN VERIFICATION TEST. Refer to **POWERTRAIN VERIFICATION TEST - 6.7L** .

3. **CHECK THE DIESEL EXHAUST FLUID SYSTEM FOR EXTERNAL LEAKS**
   1. Visually inspect the DEF system for signs of external leaks.

      NOTE: Diesel exhaust fluid will form white deposits around leaky fittings.

      Were any leaks found?

      Yes

      - Go To 4.

      No

      - Perform the appropriate repair.
      - Perform the POWERTRAIN VERIFICATION TEST. Refer to **POWERTRAIN VERIFICATION TEST - 6.7L** .

4. **CHECK THE EXHAUST SYSTEM FOR LEAKS**
   1. Visually inspect the exhaust system between the Turbocharger outlet and the SCR Catalyst outlet for signs of loose or leaking connections or damaged components

      Were any leaks or damage found?

      Yes

      - Perform the appropriate repair in accordance with the service information.
      - Perform the POWERTRAIN VERIFICATION TEST. Refer to **POWERTRAIN VERIFICATION TEST - 6.7L** .

      No

      - Go To 5.

5. **CHECK THE DECOMPOSITION TUBE FOR DIESEL EXHAUST FLUID DEPOSITS**
   1. Remove the DEF Injector. Refer to **INJECTOR, DIESEL EXHAUST FLUID, REMOVAL** .
   2. Visually inspect the Decomposition Tube for signs of diesel exhaust fluid crystals or deposits.

      Were any deposits found?

Yes

- Clean the deposits from the Decomposition Tube.
- Perform the POWERTRAIN VERIFICATION TEST. Refer to **POWERTRAIN VERIFICATION TEST - 6.7L** .

No

- Go To 6.

6. **CHECK THE DEF INJECTOR**
   1. Reconnect the DEF Injector harness connector.
   2. Place the DEF Injector in a container to capture the fluid sprayed.
   3. Turn the ignition on.
   4. With the scan tool, navigate to Systems Tests and actuate the Diesel Exhaust Fluid Doser Pump Override Test.

      NOTE: **This Test will run for six minutes before timing out. The amount of flow may fluctuate through out the test, therefore the test must be allowed to run completely in order for the results to be accurate. The fluid should spray out as a mist. There should be no dripping from the holes in the DEF Injector at any time during the duration of the test procedure.**

   5. Measure the amount of fluid sprayed after the test times out.

      Does the fluid sprayed measure between 85 ml and 115 ml?

      Yes

      - Replace the SCR Catalyst in accordance with the service information. Refer to **CATALYST, SELECTIVE CATALYTIC REDUCTION (SCR), REMOVAL** .
      - Perform the POWERTRAIN VERIFICATION TEST. Refer to **POWERTRAIN VERIFICATION TEST - 6.7L** .

      No

      - Replace the DEF Injector in accordance with the service information. Refer to **INJECTOR, DIESEL EXHAUST FLUID, REMOVAL** .
      - Perform the POWERTRAIN VERIFICATION TEST. Refer to **POWERTRAIN VERIFICATION TEST - 6.7L** .

P1C55-NOX SENSOR INTERMITTENT - BANK 1 SENSOR 1

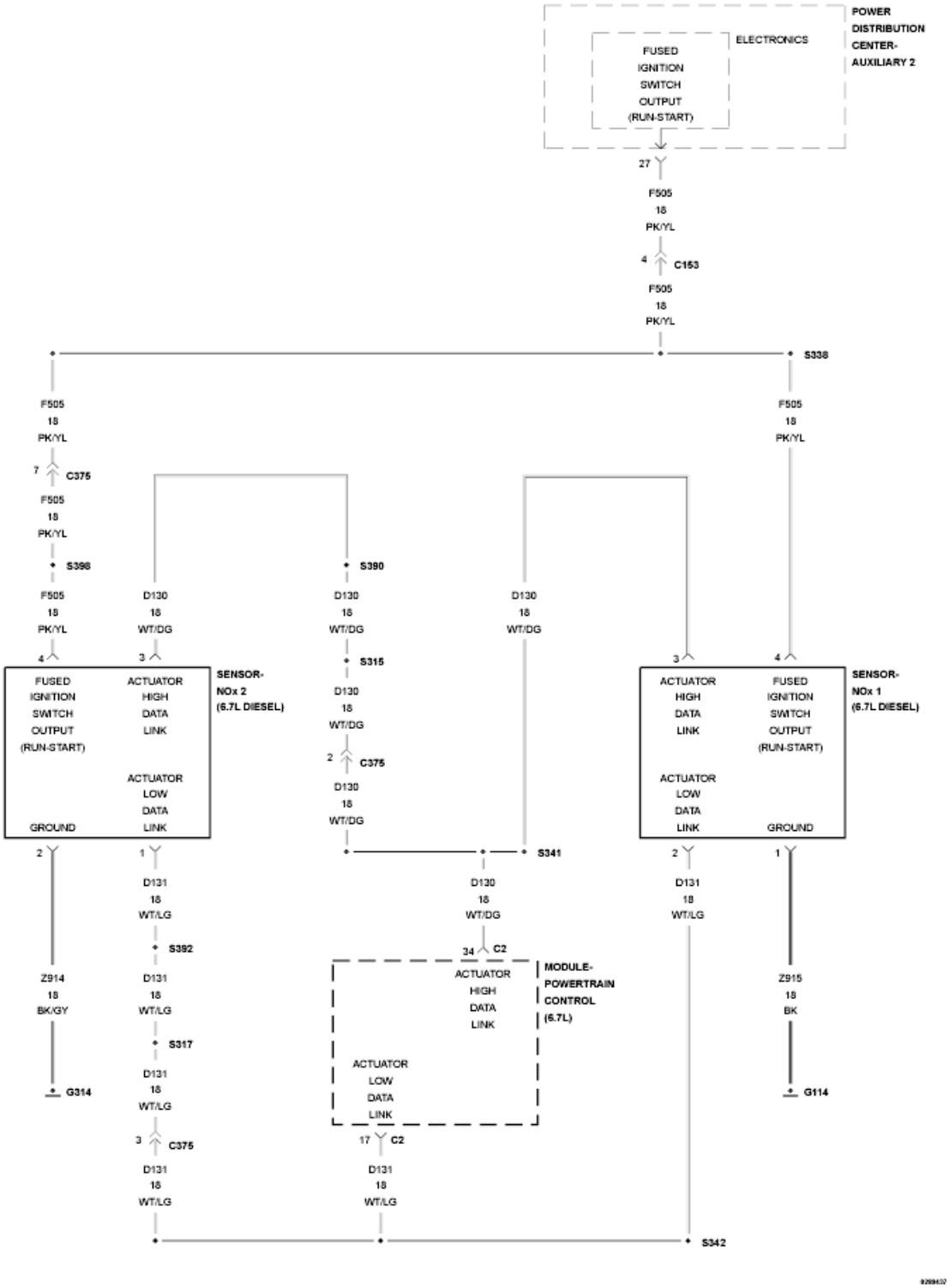

Fig. 15: NOx Sensors Wiring Diagram
Courtesy of CHRYSLER GROUP, LLC

For a complete wiring diagram, **refer to appropriate SYSTEM WIRING DIAGRAMS article** .

THEORY OF OPERATION

The aftertreatment system is equipped with two NOx Sensors and modules. The upstream NOx Sensor 1/1 is located before the SCR Catalyst and is permanently connected to a corresponding NOx Sensor Module mounted on the right frame rail. The downstream NOx Sensor 1/2 is located at the outlet of the SCR Catalyst and is permanently connected to a corresponding NOx Sensor Module also mounted on the right frame rail. The NOx Sensors and NOx Sensor Modules are calibrated to each other and must be replaced as an assembly. The two NOx Sensor and Module assemblies are not interchangeable. The NOx Sensor Modules are smart devices and communicate with the Powertrain Control Module (PCM) over the J1939 Data Link. The NOx Sensor Modules perform their own internal diagnostics and report malfunctions back to the PCM. The NOx Sensors are used to monitor the efficiency of the SCR Catalyst and dosing system. The PCM will illuminate the MIL lamp immediately after the monitor runs and fails. The PCM will turn off the MIL Lamp immediately after the monitor runs and passes.

WHEN MONITORED:

When the engine is running and the exhaust temperature at NOx Sensor 1/1 is above 150°C (302°F).

SET CONDITION:

The PCM has detected that the NOx Sensor 1/1 reading is higher or lower than what is expected for the engine operating conditions.

POSSIBLE CAUSES

Possible Causes
ENGINE MISFIRE
EXCESSIVE OIL CONSUMPTION
EGR SYSTEM LEAK
NOx SENSOR 1/1

Always perform the Pre-Diagnostic Troubleshooting procedure before proceeding. Refer to PRE-DIAGNOSTIC TROUBLESHOOTING PROCEDURE - 6.7L .

DIAGNOSTIC TEST

1. **OTHER DTCS**
    1. Ignition on, engine not running.
    2. With the scan tool check for active DTCs.

    Are any of the P2202, P2209, P220A, U029D DTCs active?

    Yes

    - Repair the other active DTCs before continuing with this diagnostic procedure.

    No

- Go To 2.

2. **CHECK FOR CYLINDER MISFIRE**
   1. Start the engine.
   2. With the scan tool, navigate to Systems Tests, and perform the injector Kill system test.

      Were any cylinders found to be faulty or low?

      Yes

      - Perform the CHECKING ENGINE MISFIRE / RUNS ROUGH / PERFORMANCE TEST diagnostic procedure. Refer to **DIAGNOSIS AND TESTING, 6.7L** .
      - Perform the POWERTRAIN VERIFICATION TEST. Refer to **POWERTRAIN VERIFICATION TEST - 6.7L** .

      No

      - Go To 3.

3. **CHECK FOR EXCESSIVE ENGINE OIL BEING INTRODUCED INTO THE AFTERTREATMENT SYSTEM**
   1. Turn the ignition off.
   2. Remove the turbocharger outlet and inspect for signs of oil, fuel or moisture being introduced into the Aftertreatment system from the engine.

      Was engine oil, fuel or moisture found in the turbocharger exhaust outlet?

      Yes

      - Locate the cause of possible diesel fuel or engine oil being carried from the engine into the exhaust system. Inspect the SCR Catalyst for possible damage.
      - Perform the POWERTRAIN VERIFICATION TEST. Refer to **POWERTRAIN VERIFICATION TEST - 6.7L** .

      No

      - Go To 4.

4. **CHECK THE EGR SYSTEM FOR LEAKS**
   1. Visually inspect the entire EGR system for signs soot indicating a leak.

      Is there signs of an EGR system leak?

      Yes

      - Repair the EGR system leak in accordance with the service information.
      - Perform the POWERTRAIN VERIFICATION TEST. Refer to **POWERTRAIN**

VERIFICATION TEST - 6.7L .

No

- Replace the NOx Sensor 1/1 in accordance with the service information. Refer to **SENSOR, NOX, REMOVAL** .
- Perform the POWERTRAIN VERIFICATION TEST. Refer to **POWERTRAIN VERIFICATION TEST - 6.7L** .

P1C56-NOX SENSOR INTERMITTENT - BANK 1 SENSOR 2

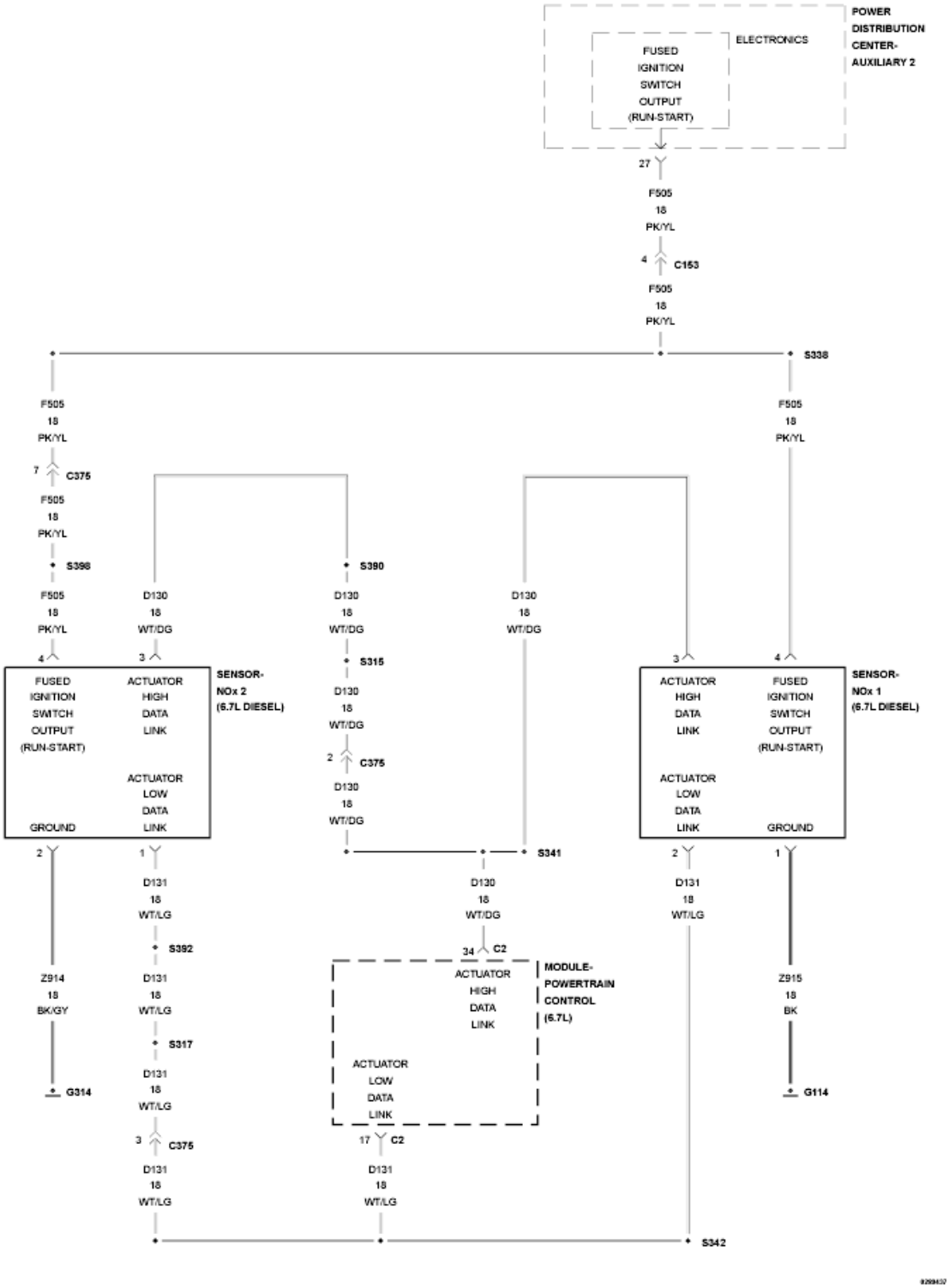

Fig. 16: NOx Sensors Wiring Diagram
Courtesy of CHRYSLER GROUP, LLC

For a complete wiring diagram, **refer to appropriate SYSTEM WIRING DIAGRAMS article** .

THEORY OF OPERATION

The aftertreatment system is equipped with two NOx Sensors and modules. The Upstream NOx Sensor 1/1 is located before the SCR Catalyst and is permanently connected to a corresponding NOx Sensor Module mounted on the right frame rail. The downstream NOx Sensor 1/2 is located at the outlet of the SCR Catalyst and is permanently connected to a corresponding NOx Sensor Module also mounted on the right frame rail. The NOx Sensors and NOx Sensor Modules are calibrated to each other and must be replaced as an assembly. The two NOx Sensor and Module assemblies are not interchangeable. The NOx Sensor Modules are smart devices and communicate with the Powertrain Control Module (PCM) over the J1939 Data Link. The NOx Sensor Modules perform their own internal diagnostics and report malfunctions back to the PCM. The NOx Sensors are used to monitor the efficiency of the SCR Catalyst and dosing system. The PCM will illuminate the MIL lamp immediately after the monitor runs and fails. The PCM will turn off the MIL Lamp immediately after the monitor runs and passes.

WHEN MONITORED:

When the engine is running and the exhaust temperature at NOx Sensor 1/2 is above 150°C (302°F).

SET CONDITION:

The PCM has detected that the NOx Sensor 1/2 reading is higher or lower than what is expected for the engine operating conditions.

POSSIBLE CAUSES

Possible Causes
DIESEL EXHAUST FLUID DEPOSITS IN THE DECOMPOSITION TUBE
EXHAUST SYSTEM LEAK
ENGINE MISFIRE
EXCESSIVE OIL CONSUMPTION
EGR SYSTEM LEAK
NOx SENSOR 1/2

Always perform the Pre-Diagnostic Troubleshooting procedure before proceeding. Refer to PRE-DIAGNOSTIC TROUBLESHOOTING PROCEDURE - 6.7L .

DIAGNOSTIC TEST

1. **OTHER DTCS**
    1. Ignition on, engine not running.
    2. With the scan tool check for active DTCs.

       Are any of the P2119 P0102 P229F, U029E, U059F DTCs active?

       Yes

       - Repair the other active DTCs before continuing with this diagnostic procedure.

No

- Go To 2.

2. **CHECK FOR DEPOSITS IN THE DECOMPOSITION TUBE**
   1. Turn the ignition off.
   2. Remove the DEF Injector from the Decomp Tube. Refer to **INJECTOR, DIESEL EXHAUST FLUID, REMOVAL** .
   3. Visually inspect the Decomp Tube for diesel exhaust fluid deposits.

      Were any deposits found?

      Yes

      - Clean the deposits from the Decomp Tube. Use a non-metallic abrasive pad to clean the remaining small particles from the decomp tube.
      - Perform the POWERTRAIN VERIFICATION TEST. Refer to **POWERTRAIN VERIFICATION TEST - 6.7L** .

      No

      - Go To 3.

3. **CHECK THE EXHAUST SYSTEM FOR LEAKS**
   1. Visually inspect the entire exhaust system for signs of a leak.

      Were any exhaust leaks found?

      Yes

      - Perform the appropriate repair.
      - Perform the POWERTRAIN VERIFICATION TEST. Refer to **POWERTRAIN VERIFICATION TEST - 6.7L** .

      No

      - Go To 4.

4. **CHECK FOR CYLINDER MISFIRE**
   1. Start the engine.
   2. With the scan tool, navigate to Systems Tests, and perform the Injector Kill system test.

      Were any cylinders found to be faulty or low?

      Yes

      - Perform the CHECKING ENGINE MISFIRE / RUNS ROUGH / PERFORMANCE TEST

diagnostic procedure. Refer to **DIAGNOSIS AND TESTING, 6.7L** .

- Perform the POWERTRAIN VERIFICATION TEST. Refer to **POWERTRAIN VERIFICATION TEST - 6.7L** .

No

- Go To 5.

5. **CHECK FOR EXCESSIVE ENGINE OIL BEING INTRODUCED INTO THE AFTERTREATMENT SYSTEM**
   1. Turn the ignition off.
   2. Remove the turbocharger outlet and inspect for signs of oil, fuel or moisture being introduced into the Aftertreatment system from the engine.

   Was engine oil, fuel or moisture found in the turbocharger exhaust outlet?

   Yes

   - Locate the cause of possible diesel fuel or engine oil being carried from the engine into the exhaust system. Inspect the SCR Catalyst for possible damage.
   - Perform the POWERTRAIN VERIFICATION TEST. Refer to **POWERTRAIN VERIFICATION TEST - 6.7L** .

   No

   - Go To 6.

6. **CHECK THE EGR SYSTEM FOR LEAKS**
   1. Visually inspect the entire EGR system for signs soot indicating a leak.

   Is there signs of an EGR system leak?

   Yes

   - Repair the EGR system leak in accordance with the service information.
   - Perform the POWERTRAIN VERIFICATION TEST. Refer to **POWERTRAIN VERIFICATION TEST - 6.7L** .

   No

   - Replace the NOx Sensor 1/2 in accordance with the service information. Refer to **SENSOR, NOX, REMOVAL** .
   - Perform the POWERTRAIN VERIFICATION TEST. Refer to **POWERTRAIN VERIFICATION TEST - 6.7L** .

P1C57-REDUCTANT CONTROL MODULE SHUTDOWN - CRASH EVENT DETECTED

For a complete wiring diagram, **refer to appropriate SYSTEM WIRING DIAGRAMS article** .

WHEN MONITORED:

With the ignition on.

SET CONDITION:

The Airbag Control Module reported a crash event to the Powertrain Control Module (PCM).

POSSIBLE CAUSES

Possible Causes
A CRASH EVENT OCCURED

Always perform the Pre-Diagnostic Troubleshooting procedure before proceeding. Refer to PRE-DIAGNOSTIC TROUBLESHOOTING PROCEDURE - 6.7L .

DIAGNOSTIC TEST

1. **ACTIVE DTC**
    1. Ignition on, engine not running.
    2. With the scan tool check for active DTCs.

    Is the DTC active?

    Yes

    - Perform the appropriate repairs and erase the DTC.
    - Perform the POWERTRAIN VERIFICATION TEST. Refer to **POWERTRAIN VERIFICATION TEST - 6.7L** .

    No

    - Perform the INTERMITTENT CONDITION diagnostic procedure. Refer to **INTERMITTENT CONDITION - 6.7L** .

P1C6F-(DIESEL EXHAUST FLUID) REDUCTANT LINE HEATER RELAY CIRCUIT PERFORMANCE

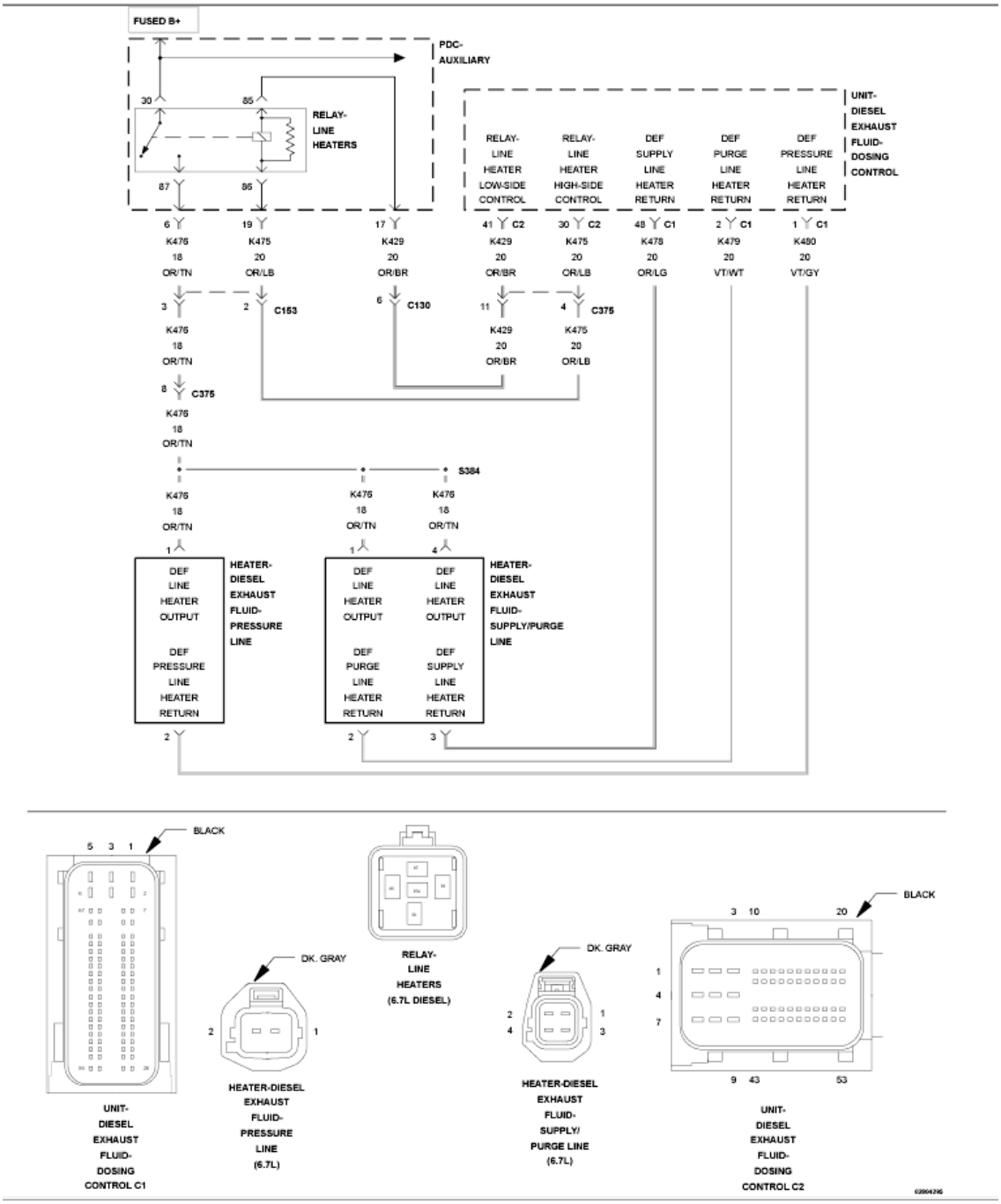

Fig. 17: Diesel Exhaust Fluid Reductant Line Heater Relay Control Circuit Wiring Diagram
Courtesy of CHRYSLER GROUP, LLC

For a complete wiring diagram, **refer to appropriate SYSTEM WIRING DIAGRAMS article** .

THEORY OF OPERATION

Each of the Diesel Exhaust Fluid (DEF) system hoses has a built in heater to warm the fluid in the lines. The three line heaters share a common power supply via the DEF Line Heater Relay which is controlled by the DEF Dosing Control Unit. The DEF Dosing Control Unit controls the heaters individually through the line heater

return circuits. The three line heater circuits are monitored at the return circuit. The DEF Dosing Unit Module will illuminate the MIL light via the PCM immediately after the diagnostics runs and fails and the line heaters will be disabled. The DEF Dosing Control Unit will turn off the MIL light via the PCM immediately after the monitor runs and passes.

WHEN MONITORED:

This monitor runs at key off.

SET CONDITION:

Battery voltage has been detected at the DEF Line Heaters when the Line Heater Relay is commanded off.

POSSIBLE CAUSES

Possible Causes
LINE HEATER RELAY STUCK ON
(K476) DEF LINE HEATER OUTPUT CIRCUIT SHORTED TO VOLTAGE

Always perform the Pre-Diagnostic Troubleshooting procedure before proceeding. Refer to PRE-DIAGNOSTIC TROUBLESHOOTING PROCEDURE - 6.7L .

DIAGNOSTIC TEST

1. **ACTIVE DTC**
    1. Turn the ignition on, engine not running.
    2. With the scan tool check for active DTCs.

    Is the DTC active?

    Yes

    - Go To 2.

    No

    - Perform the INTERMITTENT CONDITION diagnostic procedure. Refer to **INTERMITTENT CONDITION - 6.7L** .
2. **CHECK THE LINE HEATER RELAY**
    1. Remove the Line Heater Relay.
    2. Turn the ignition off for one minute.
    3. Turn the ignition on, engine not running.
    4. With the scan tool check for active DTCs.

    Is the DTC active?

Yes

- Repair the (K476) DEF Line Heater Output circuit for a short to voltage.
- Perform the POWERTRAIN VERIFICATION TEST. Refer to **POWERTRAIN VERIFICATION TEST - 6.7L** .

No

- Replace the Line Heater Relay in accordance with the service information.
- Perform the POWERTRAIN VERIFICATION TEST. Refer to **POWERTRAIN VERIFICATION TEST - 6.7L** .

P1C70-SCR ERROR DETECTED - ENGINE DISABLED

For a complete wiring diagram, **refer to appropriate SYSTEM WIRING DIAGRAMS article** .

THEORY OF OPERATION

The Diesel Exhaust Fluid (DEF) system holds a total of eight gallons of fluid. There are a series of three warning levels to indicate to the customer when the fluid is low or incorrect. The driver warning and inducement strategy for a low fluid condition is as follows: The first warning will occur when the tank level is at approximately three gallons. The customer will here a chime and get an EVIC message reading "LOW DEF REFILL SOON". The second warning level will occur when the tank level is at approximately two gallons. The customer will here a chime and get an EVIC message reading "REFILL DEF ENGINE WILL NOT RESTART IN XXX MILES". If the message is ignored until the tank is empty, the vehicle will not start. The customer will here a chime and get an EVIC message reading "REFILL DEF ENGINE WILL NOT START". The system will arrive at this level with approximately 0.7 gallon of fluid left in the tank. **The vehicle will not start until a minimum of two and a half gallons of approved Diesel Exhaust Fluid is added to the tank** .

WHEN MONITORED:

Continuously with the engine running.

SET CONDITION:

The Powertrain Control Module (PCM) detects that the engine has been operated for an extended period of time with critical Selective Catalytic Reduction (SCR) faults active, and no repair action has been taken. This amount of time will vary, depending on which SCR faults are active.

POSSIBLE CAUSES

Possible Causes
DIESEL EXHAUST FLUID TANK EMPTY

Always perform the Pre-Diagnostic Troubleshooting procedure before proceeding. Refer to PRE-DIAGNOSTIC TROUBLESHOOTING PROCEDURE - 6.7L .

DIAGNOSTIC TEST

1. **ACTIVE DTC**
    1. Ignition on, engine not running.
    2. With the scan tool check for active DTCs.

    Is the DTC active?

    Yes

    - If this DTC is present, the DEF Tank is Empty causing the starter to be disabled. **A minimum of two and a half gallons of approved Diesel Exhaust Fluid** must be added for engine to be started.
    - Perform the POWERTRAIN VERIFICATION TEST. Refer to **POWERTRAIN VERIFICATION TEST - 6.7L** .

    No

    - Perform the INTERMITTENT CONDITION diagnostic procedure. Refer to **INTERMITTENT CONDITION - 6.7L** .

P2002-DIESEL PARTICULATE FILTER EFFICIENCY BELOW THRESHOLD

For a complete wiring diagram, **refer to appropriate SYSTEM WIRING DIAGRAMS article** .

THEORY OF OPERATION

The Diesel Particulate Filter is designed to physically filter soot and to eliminate hydrocarbons from the engine exhaust gases through catalyst reactions in the exhaust stream. Federal law requires that the filter's efficiency be monitored for signs of degradation that would compromise the efficiency of the filter. The Powertrain Control Module (PCM) monitors the efficiency of the Diesel Particulate Filter soot level using data received from the Exhaust Differential Pressure Sensor, which monitors the restriction across the Diesel Particulate Filter. The PCM monitors the restriction in the Diesel Particulate Filter at various engine speeds/loads and will set the fault if the restriction is below a calibrated threshold minimum value. The PCM will illuminate the MIL light Immediately when the diagnostic runs and fails in two consecutive drive cycles. The PCM will turn off the MIL light immediately after the diagnostic runs and passes in four consecutive drive cycles.

WHEN MONITORED:

This diagnostic runs when the engine is running and after an active regeneration of the Diesel Particulate Filter has completed.

SET CONDITION:

The Powertrain Control Module (PCM) will set the fault if the delta pressure signal goes below a calibrated threshold for a calibrated time.

POSSIBLE CAUSES

Possible Causes
FAILED DIESEL PARTICULATE FILTER
EXHAUST SYSTEM LEAK
INTAKE AIR SYSTEM LEAK
EGR LEAK
FAILED EXHAUST DIFFERENTIAL PRESSURE SENSOR
REVERSED OR LEAKING DIESEL PARTICULATE FILTER PRESSURE SENSOR LINES

Always perform the Pre-Diagnostic Troubleshooting procedure before proceeding. Refer to PRE-DIAGNOSTIC TROUBLESHOOTING PROCEDURE - 6.7L .

DIAGNOSTIC TEST

1. **ACTIVE DTC**
   1. Ignition on, engine not running.
   2. With the scan tool, read DTCs.

      Is DTC P2002 Active?

      Yes

      - Go To 2.

      No

      - Perform the INTERMITTENT CONDITION diagnostic procedure. Refer to **INTERMITTENT CONDITION - 6.7L** .
2. **CHECK THE DIESEL PARTICULATE FILTER PRESSURE SENSOR TUBES AND HOSES**
   1. Inspect the Exhaust Differential Pressure sensor tubes and hoses.

      Are leaks or blockages found or hoses reversed?

      Yes

      - Repair as necessary.
      - Perform the DIESEL AFTERTREATMENT VALIDATION - 6.7L procedure. Refer to **DIESEL AFTERTREATMENT VALIDATION- 6.7L** .

      No

      - Go To 3.
3. **CHECK THE EGR FOR A LEAK**

1. Look for visible signs (soot streaks) of an external EGR leak.

   Are there any EGR system leaks?

   Yes

   - Repair the EGR system leak.
   - Perform the DIESEL AFTERTREATMENT VALIDATION - 6.7L procedure. Refer to **DIESEL AFTERTREATMENT VALIDATION- 6.7L** .

   No

   - Go To 4.

4. **CHECK THE INTAKE AIR SYSTEM**
   1. Perform the INTAKE AIR SYSTEM PRESSURE TEST diagnostic procedure. Refer to **DIAGNOSIS AND TESTING, 6.7L** .

      Were any intake system leaks found?

      Yes

      - Repair the intake system leak.
      - Perform the DIESEL AFTERTREATMENT VALIDATION - 6.7L procedure. Refer to **DIESEL AFTERTREATMENT VALIDATION- 6.7L** .

      No

      - Go To 5.

5. **CHECK THE EXHAUST SYSTEM FOR LEAKS**
   1. Perform the CHECKING THE EXHAUST SYSTEM FOR LEAKS diagnostic procedure. Refer to **DIAGNOSIS AND TESTING, 6.7L** .

      Are there any exhaust system leaks?

      Yes

      - Repair the Exhaust system leak.
      - Perform the DIESEL AFTERTREATMENT VALIDATION - 6.7L procedure. Refer to **DIESEL AFTERTREATMENT VALIDATION- 6.7L** .

      No

      - Go To 6.

6. **CHECK THE DIESEL PARTICULATE FILTER**
   1. Perform the AFTERTREATMENT INSPECTION GUIDELINE - 6.7L procedure. Refer to

DIAGNOSIS AND TESTING, 6.7L .

Was any internal damage found in the Diesel Particulate Filter?

Yes

- Replace the Diesel Particulate Filter in accordance with the service information.
- Perform the DIESEL AFTERTREATMENT VALIDATION - 6.7L procedure. Refer to **DIESEL AFTERTREATMENT VALIDATION- 6.7L** .

No

- Perform the INTERMITTENT CONDITION diagnostic procedure. Refer to **INTERMITTENT CONDITION - 6.7L** .

P202A-(DIESEL EXHAUST FLUID) REDUCTANT TANK HEATER CONTROL CIRCUIT OPEN

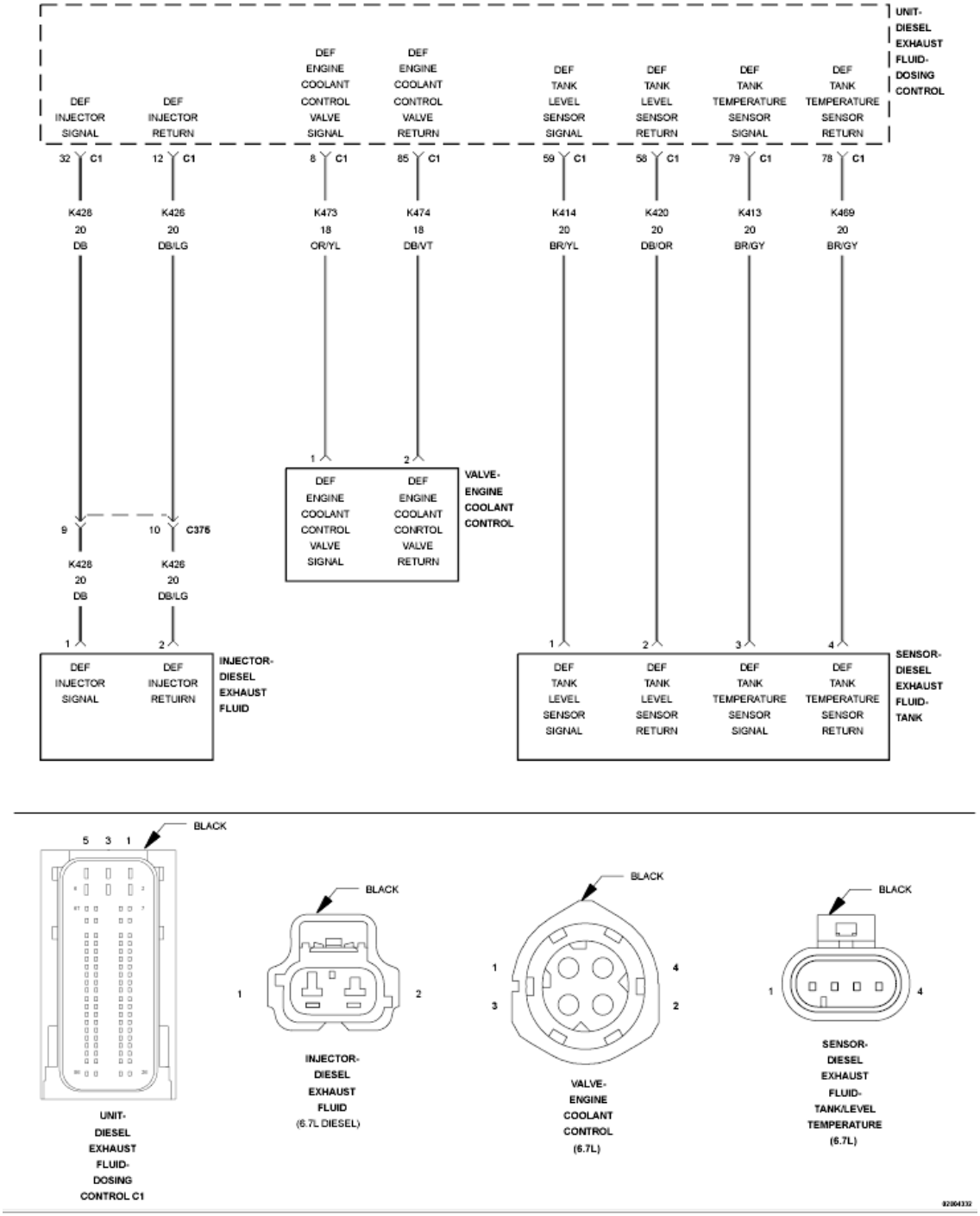

Fig. 18: Diesel Exhaust Fluid Reductant Tank Heater Control Circuit Wiring Diagram
Courtesy of CHRYSLER GROUP, LLC

For a complete wiring diagram, **refer to appropriate SYSTEM WIRING DIAGRAMS article** .

THEORY OF OPERATION

The Diesel Exhaust Fluid (DEF) Tank has an internal heating coil to help eliminate freezing of Diesel Exhaust

Fluid. The DEF Dosing Control Unit monitors the temperature of the Diesel Exhaust Fluid inside the tank. When it is determined that the Diesel Exhaust Fluid needs to be heated, the DEF Dosing Control Unit opens the DEF Engine Coolant Valve which is located nest to the DEF Tank, and allows warm engine coolant to circulate through the heating coil inside the tank to warm the Diesel Exhaust Fluid in the tank. The DEF Dosing Control Unit will illuminate the MIL lamp via the PCM immediately after this diagnostic runs and fails. The DEF Dosing Control Unit will turn off the MIL lamp via the PCM immediately after the diagnostic runs and passes for three consecutive key cycles.

WHEN MONITORED:

Continuously with the ignition on.

SET CONDITION:

The DEF Dosing Control Unit detects that the DEF Engine Coolant Control Valve circuit is open.

POSSIBLE CAUSES

Possible Causes
(K473) DIESEL EXHAUST FLUID ENGINE COOLANT CONTROL VALVE SIGNAL CIRCUIT OPEN/HIGH RESISTANCE
(K474) DIESEL EXHAUST FLUID ENGINE COOLANT CONTROL VALVE RETURN CIRCUIT OPEN/HIGH RESISTANCE
DIESEL EXHAUST FLUID ENGINE COOLANT CONTROL VALVE
DIESEL EXHAUST FLUID DOSING CONTROL UNIT

Always perform the Pre-Diagnostic Troubleshooting procedure before proceeding. Refer to PRE-DIAGNOSTIC TROUBLESHOOTING PROCEDURE - 6.7L .

DIAGNOSTIC TEST

1. **ACTIVE DTC**
    1. Turn the ignition on for one minute, engine not running.
    2. With the scan tool check for active DTCs.

       Is the DTC active?

       Yes

       - Go To 3.

       No

       - Perform the INTERMITTENT CONDITION diagnostic procedure. Refer to **INTERMITTENT CONDITION - 6.7L** .
2. **CHECK THE DIESEL EXHAUST FLUID ENGINE COOLANT CONTROL VALVE**

1. Turn ignition off.
2. Disconnect the DEF Engine Coolant Control Valve harness connector.
3. Connect a jumper between the (K473) DEF Engine Coolant Control Valve Signal circuit and the (K474) DEF Engine Coolant Control Valve Return circuit at the DEF Engine Coolant Control Valve harness connector.

NOTE: Be careful not to spread the terminals in the connector.

4. Turn the ignition on.
5. With a scan tool, View DTCs.

Does the scan tool display DTC P202B as active and P202A as stored with the jumper in place?

Yes

- Replace the DEF Engine Coolant Control Valve in accordance with the service information. Refer to **VALVE, DIESEL EXHAUST FLUID ENGINE COOLANT CONTROL, REMOVAL** .
- Perform the POWERTRAIN VERIFICATION TEST. Refer to **POWERTRAIN VERIFICATION TEST - 6.7L** .

No

- Go To 3.

3. **CHECK THE (K473) DIESEL EXHAUST FLUID ENGINE COOLANT CONTROL VALVE SIGNAL CIRCUIT FOR AN OPEN/HIGH RESISTANCE**

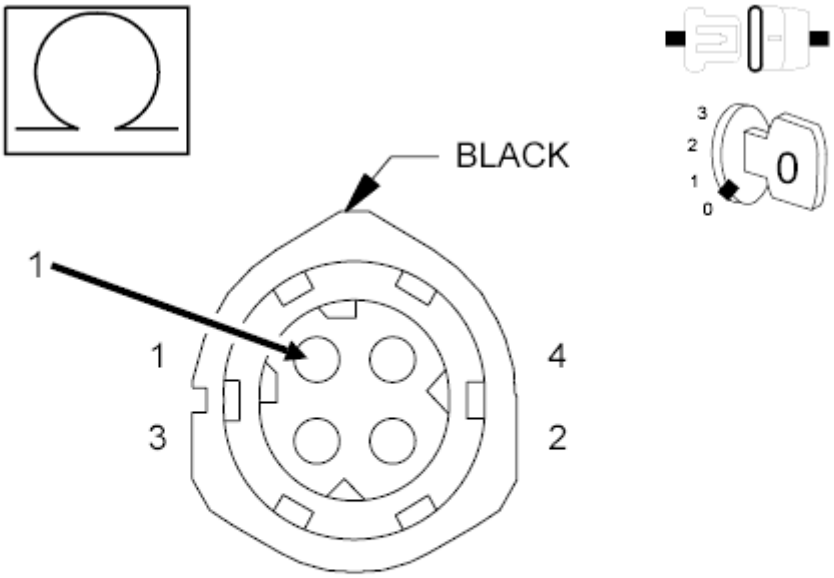

VALVE-
ENGINE
COOLANT
CONTROL
(6.7L)

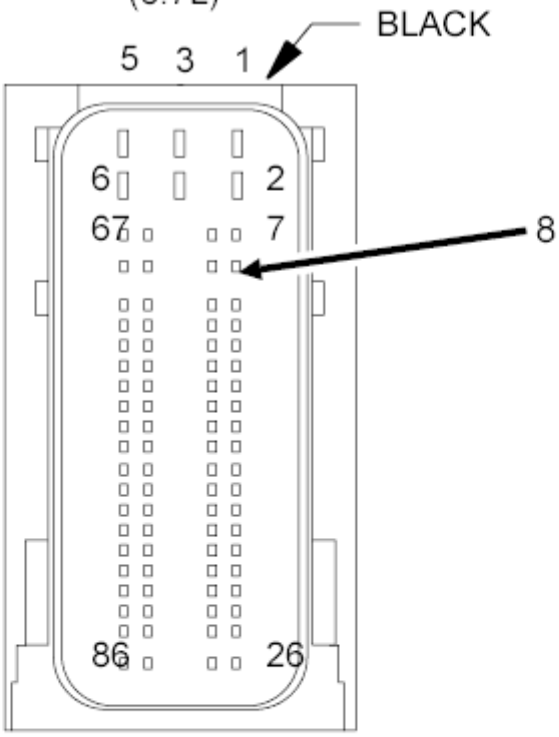

UNIT-
DIESEL
EXHAUST
FLUID-
DOSING
CONTROL 21

Fig. 19: Checking Diesel Exhaust Fluid Engine Coolant Control Valve Signal Circuit For An Open Or High Resistance
Courtesy of CHRYSLER GROUP, LLC

1. Turn ignition off.
2. Disconnect the DEF Dosing Control Unit C1 harness connector.
3. Measure the resistance of the (K473) DEF Engine Coolant Control Valve Signal circuit between the DEF Dosing Control Unit C1 harness connector and the DEF Engine Coolant Control Valve harness connector.

   Is the resistance below 5.0 Ohms?

   Yes

   - Go To 4.

   No

   - Repair the (K473) DEF Engine Coolant Control Valve Signal circuit for an open or high resistance.
   - Perform the POWERTRAIN VERIFICATION TEST. Refer to **POWERTRAIN VERIFICATION TEST - 6.7L** .

4. **CHECK THE (K474) DIESEL EXHAUST FLUID ENGINE COOLANT CONTROL VALVE RETURN CIRCUIT FOR AN OPEN/HIGH RESISTANCE**

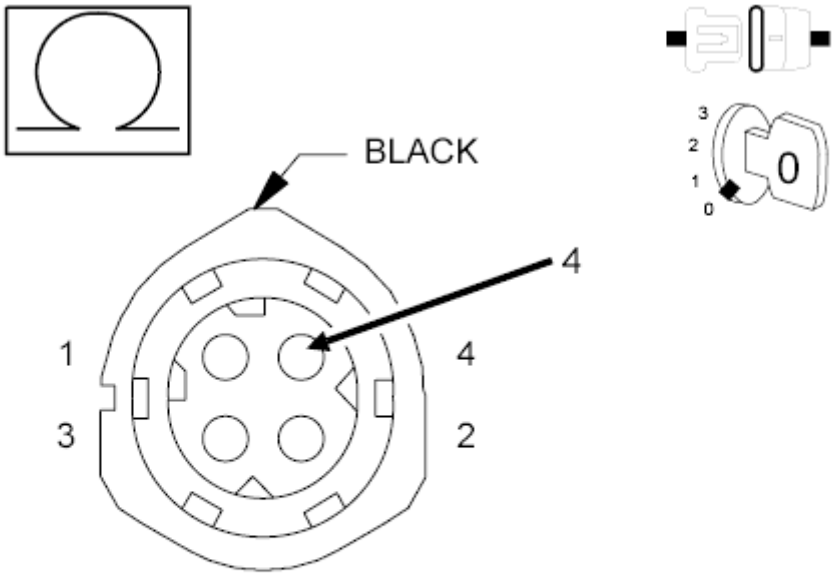

VALVE-
ENGINE
COOLANT
CONTROL
(6.7L)

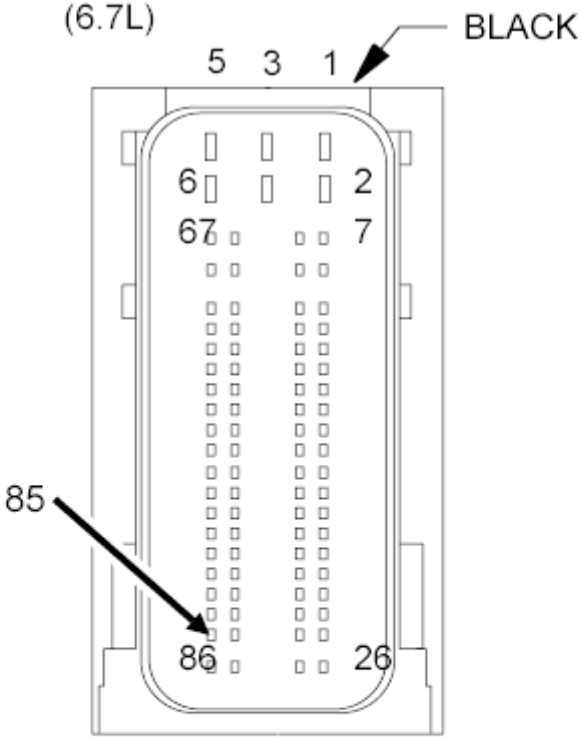

UNIT-
DIESEL
EXHAUST
FLUID-
DOSING
CONTROL C1

Fig. 20: Checking Diesel Exhaust Fluid Engine Coolant Control Valve Return Circuit For An Open/High Resistance
Courtesy of CHRYSLER GROUP, LLC

1. Measure the resistance of the (K474) DEF Engine Coolant Control Valve Return circuit between the DEF Dosing Control Unit C1 harness connector and the DEF Engine Coolant Control Valve harness connector.

   Is the resistance below 5.0 Ohms?

   Yes

   - Replace the DEF Dosing Control Unit in accordance with the service information. Refer to **UNIT, DIESEL EXHAUST FLUID DOSING CONTROL, REMOVAL** .
   - Perform the POWERTRAIN VERIFICATION TEST. Refer to **POWERTRAIN VERIFICATION TEST - 6.7L** .

   No

   - Repair the (K474) DEF Engine Coolant Control Valve Return circuit for an open or high resistance.
   - Perform the POWERTRAIN VERIFICATION TEST. Refer to **POWERTRAIN VERIFICATION TEST - 6.7L** .

P202B-(DIESEL EXHAUST FLUID) REDUCTANT TANK HEATER CONTROL CIRCUIT LOW

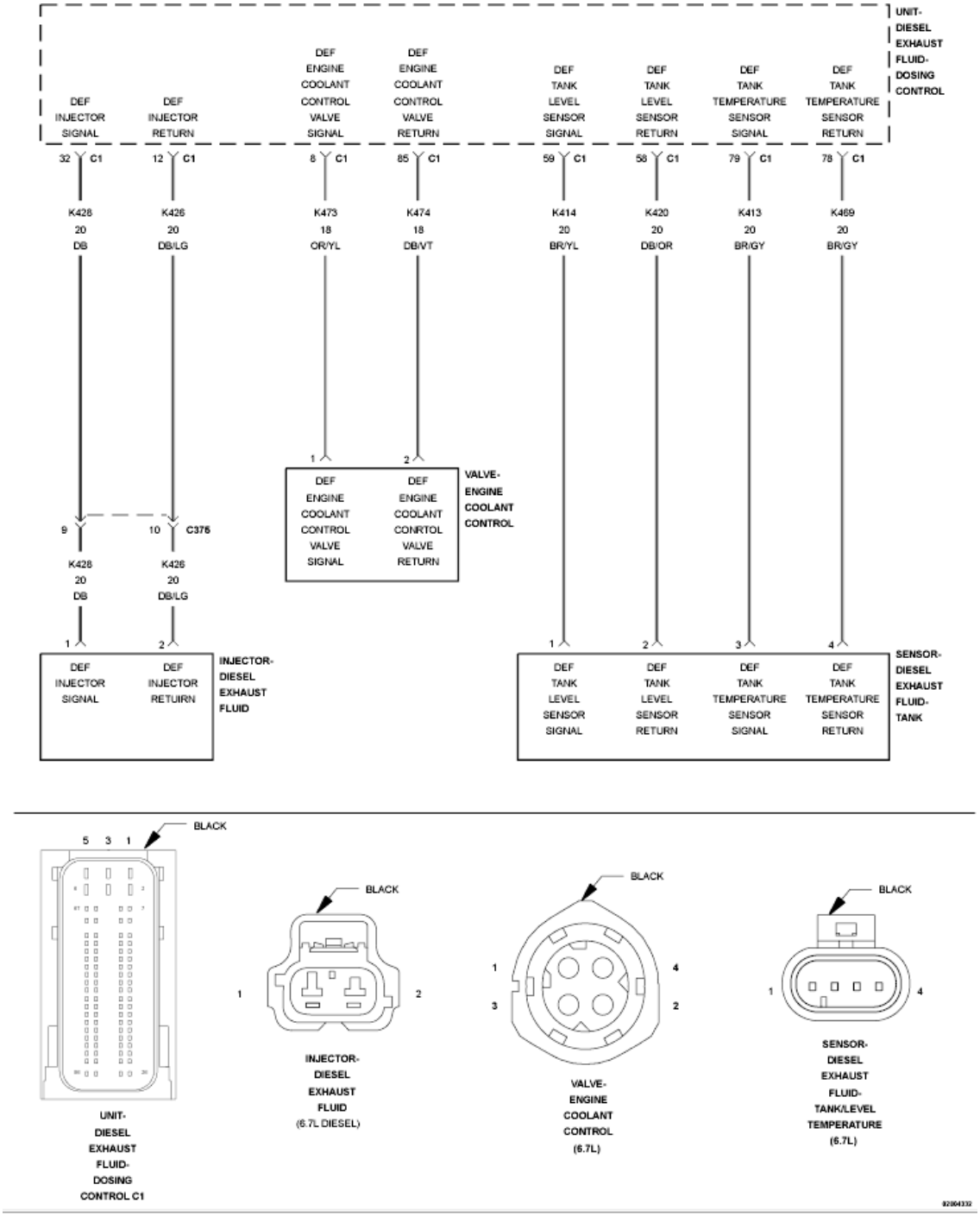

Fig. 21: Diesel Exhaust Fluid Reductant Tank Heater Control Circuit Wiring Diagram
Courtesy of CHRYSLER GROUP, LLC

For a complete wiring diagram, **refer to appropriate SYSTEM WIRING DIAGRAMS article** .

THEORY OF OPERATION

The Diesel Exhaust Fluid (DEF) Tank has an internal heating coil to help eliminate freezing of Diesel Exhaust

Fluid. The DEF Dosing Control Unit monitors the temperature of the Diesel Exhaust Fluid inside the tank. When it is determined that the Diesel Exhaust Fluid needs to be heated, the DEF Dosing Control Unit opens the DEF Engine Coolant Valve which is located nest to the DEF Tank, and allows warm engine coolant to circulate through the heating coil inside the tank to warm the Diesel Exhaust Fluid in the tank. The DEF Dosing Control Unit will illuminate the MIL lamp via the Powertrain Control Module (PCM) immediately after this diagnostic runs and fails. The DEF Dosing Control Unit will turn off the MIL lamp via the PCM immediately after the diagnostic runs and passes for three consecutive key cycles.

WHEN MONITORED:

With the ignition on.

SET CONDITION:

The DEF Dosing Control Unit detects a low signal voltage or short to ground on the (K473) DEF Engine Coolant Control Valve Signal circuit.

POSSIBLE CAUSES

Possible Causes
(K473) DIESEL EXHAUST FLUID ENGINE COOLANT CONTROL VALVE SIGNAL CIRCUIT SHORTED TO GROUND
(K474) DIESEL EXHAUST FLUID ENGINE COOLANT CONTROL VALVE RETURN CIRCUIT SHORTED TO GROUND
DIESEL EXHAUST FLUID ENGINE COOLANT CONTROL VALVE
DIESEL EXHAUST FLUID DOSING CONTROL UNIT

Always perform the Pre-Diagnostic Troubleshooting procedure before proceeding. Refer to PRE-DIAGNOSTIC TROUBLESHOOTING PROCEDURE - 6.7L .

DIAGNOSTIC TEST

1. **ACTIVE DTC**
    1. Turn the ignition on for one minute, engine not running.
    2. With the scan tool check for active DTCs.

       Is the DTC active?

       Yes

       - Go To 3.

       No

       - Perform the INTERMITTENT CONDITION diagnostic procedure. Refer to **INTERMITTENT CONDITION - 6.7L** .

2. **DIESEL EXHAUST FLUID ENGINE COOLANT CONTROL VALVE**
    1. Turn ignition off.
    2. Disconnect the DEF Engine Coolant Control Valve harness connector.
    3. Turn ignition on.
    4. With a scan tool, View DTCs.

    Does the scan tool display DTC P202A as active and P202B as stored with the DEF Dosing Control Unit C1 harness connector disconnected?

    Yes

    - Replace the DEF Engine Coolant Control Valve in accordance with the service information. Refer to **VALVE, DIESEL EXHAUST FLUID ENGINE COOLANT CONTROL, REMOVAL** .
    - Perform the POWERTRAIN VERIFICATION TEST. Refer to **POWERTRAIN VERIFICATION TEST - 6.7L** .

    No

    - Go To 3.
3. **CHECK THE (K473) DIESEL EXHAUST FLUID ENGINE COOLANT CONTROL VALVE SIGNAL CIRCUIT FOR A SHORT TO GROUND**

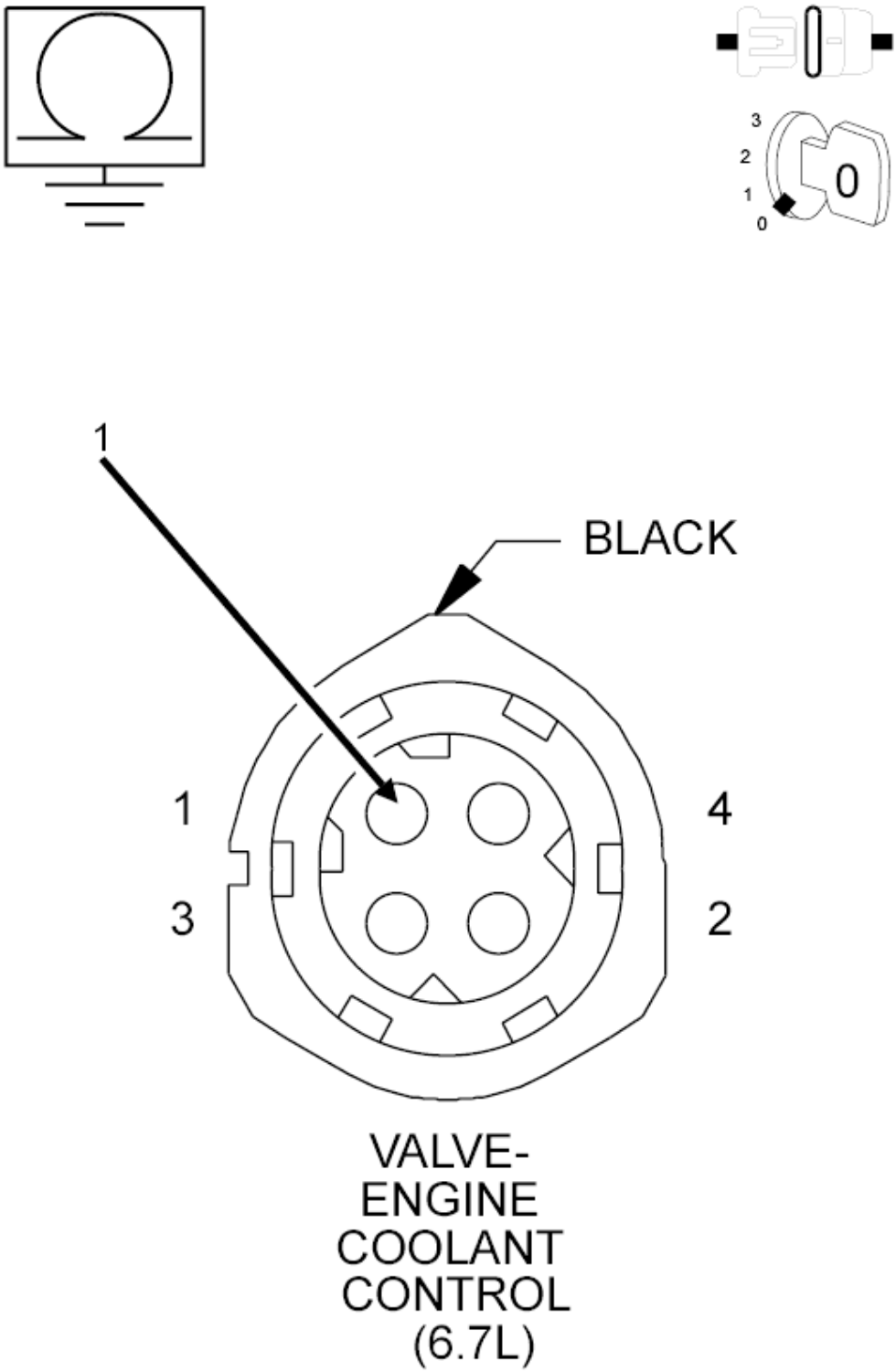

Fig. 22: Checking Diesel Exhaust Fluid Engine Coolant Control Valve Signal Circuit For A Short
Courtesy of CHRYSLER GROUP, LLC

1. Turn ignition off.

2. Disconnect the DEF Dosing Control Unit C1 harness connector.
3. Measure the resistance between ground and the (K473) DEF Engine Coolant Control Valve Signal circuit at the DEF Engine Coolant Control Valve harness connector.

   Is the resistance above 10k Ohms?

   Yes

   - Go To 4.

   No

   - Repair the (K473) DEF Engine Coolant Control Valve Signal circuit for a short to ground.
   - Perform the POWERTRAIN VERIFICATION TEST. Refer to **POWERTRAIN VERIFICATION TEST - 6.7L** .

4. **CHECK THE (K474) DIESEL EXHAUST FLUID ENGINE COOLANT CONTROL VALVE RETURN CIRCUIT FOR A SHORT TO GROUND**

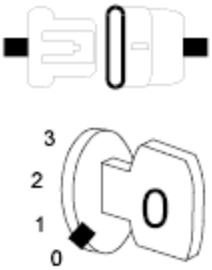

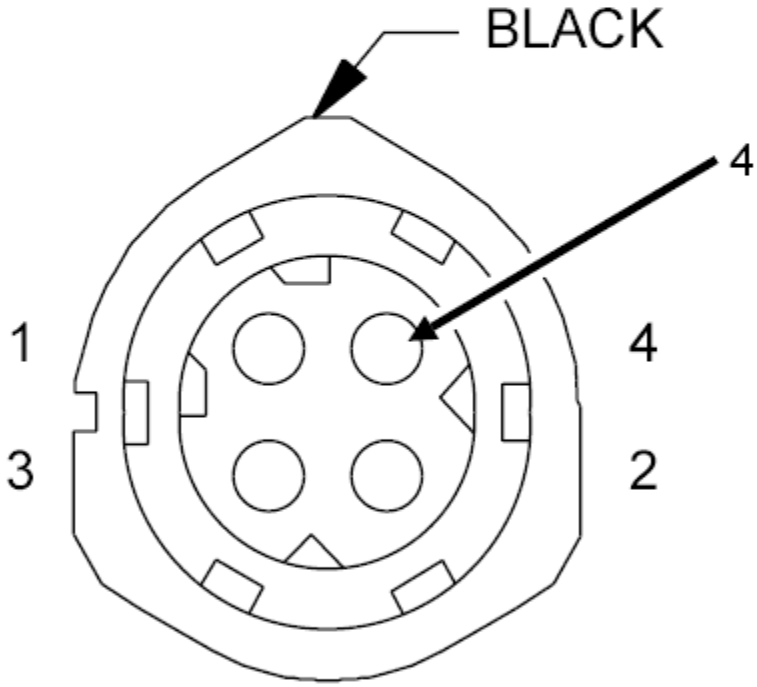

VALVE-
ENGINE
COOLANT
CONTROL
(6.7L)

Fig. 23: Checking Diesel Exhaust Fluid Engine Coolant Control Valve Return Circuit For A Short
Courtesy of CHRYSLER GROUP, LLC

1. Measure the resistance between ground and the (K474) DEF Engine Coolant Control Valve Return circuit at the DEF Engine Coolant Control Valve harness connector.

   Is the resistance above 10k Ohms?

   Yes

   - Replace the DEF Dosing Control Unit in accordance with the service information. Refer to **UNIT, DIESEL EXHAUST FLUID DOSING CONTROL, REMOVAL** .
   - Perform the POWERTRAIN VERIFICATION TEST. Refer to **POWERTRAIN VERIFICATION TEST - 6.7L** .

   No

   - Repair the (K474) DEF Engine Coolant Control Valve Return circuit for a short to ground.
   - Perform the POWERTRAIN VERIFICATION TEST. Refer to **POWERTRAIN VERIFICATION TEST - 6.7L** .

P202C-(DIESEL EXHAUST FLUID) REDUCTANT TANK HEATER CONTROL CIRCUIT HIGH

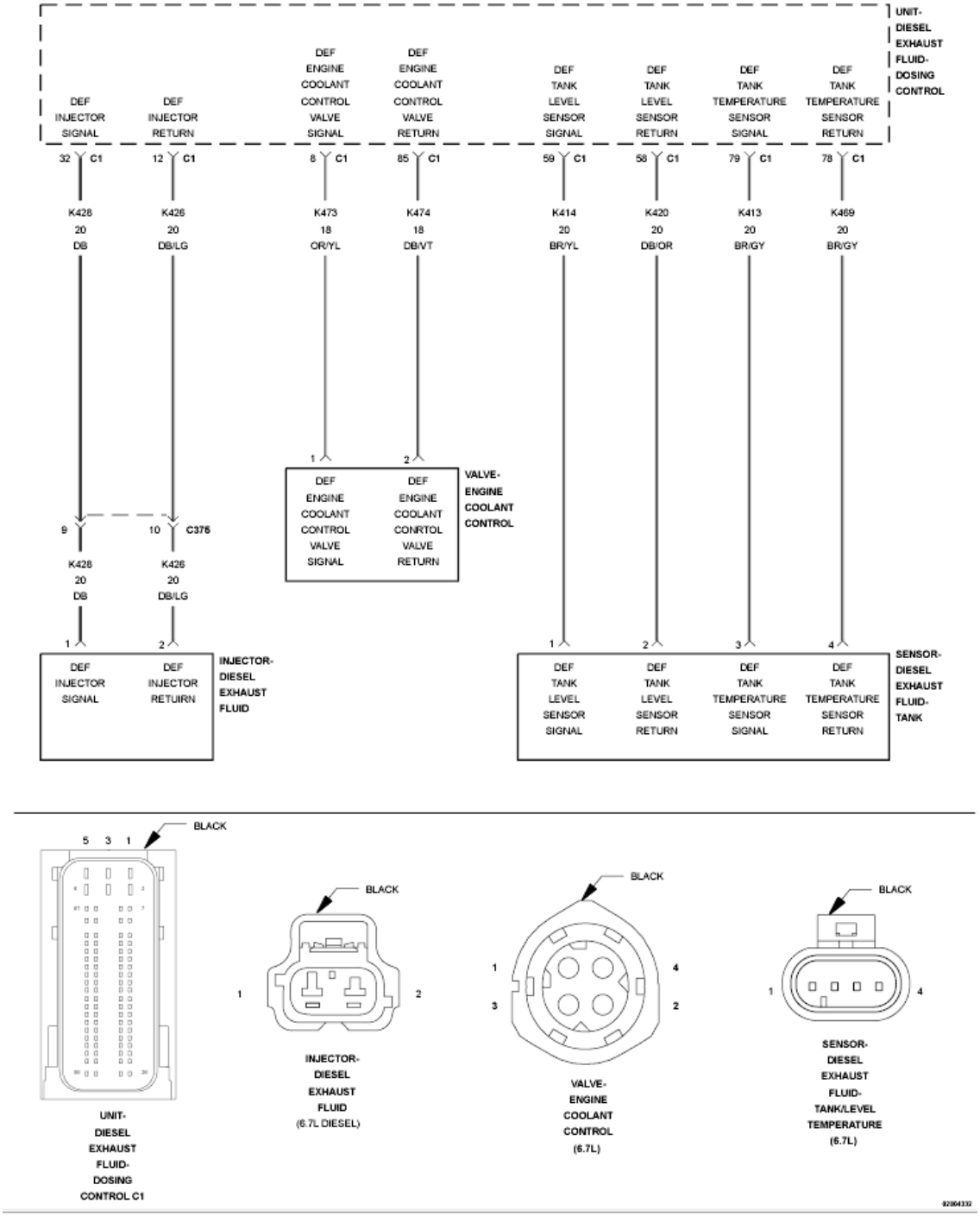

Fig. 24: Diesel Exhaust Fluid Reductant Tank Heater Control Circuit Wiring Diagram
Courtesy of CHRYSLER GROUP, LLC

For a complete wiring diagram, **refer to appropriate SYSTEM WIRING DIAGRAMS article** .

THEORY OF OPERATION

The Diesel Exhaust Fluid (DEF) Tank has an internal heating coil to help eliminate freezing of Diesel Exhaust

Fluid. The DEF Dosing Control Unit monitors the temperature of the Diesel Exhaust Fluid inside the tank. When it is determined that the Diesel Exhaust Fluid needs to be heated, the DEF Dosing Control Unit opens the DEF Engine Coolant Valve which is located nest to the DEF Tank, and allows warm engine coolant to circulate through the heating coil inside the tank to warm the Diesel Exhaust Fluid in the tank. The DEF Dosing Control Unit will illuminate the MIL lamp via the Powertrain Control Module (PCM) immediately after this diagnostic runs and fails. The DEF Dosing Control Unit will turn off the MIL lamp via the PCM immediately after the diagnostic runs and passes for three consecutive key cycles.

WHEN MONITORED:

With the ignition on.

SET CONDITION:

The DEF Dosing Control Unit detects high signal voltage on the (K473) DEF Engine Coolant Control Valve Signal circuit.

POSSIBLE CAUSES

Possible Causes
(K473) DIESEL EXHAUST FLUID ENGINE COOLANT CONTROL VALVE SIGNAL CIRCUIT SHORTED TO VOLTAGE
(K473) DIESEL EXHAUST FLUID ENGINE COOLANT CONTROL VALVE SIGNAL CIRCUIT OPEN/HIGH RESISTANCE
(K474) DIESEL EXHAUST FLUID ENGINE COOLANT CONTROL VALVE RETURN CIRCUIT OPEN/HIGH RESISTANCE
(K473) DIESEL EXHAUST FLUID ENGINE COOLANT CONTROL VALVE SIGNAL CIRCUIT SHORTED TO THE (K474) DIESEL EXHAUST FLUID ENGINE COOLANT CONTROL VALVE RETURN CIRCUIT
DIESEL EXHAUST FLUID ENGINE COOLANT CONTROL VALVE
DIESEL EXHAUST FLUID DOSING CONTROL UNIT

Always perform the Pre-Diagnostic Troubleshooting procedure before proceeding. Refer to PRE-DIAGNOSTIC TROUBLESHOOTING PROCEDURE - 6.7L .

DIAGNOSTIC TEST

1. **ACTIVE DTC**
    1. Turn the ignition on for one minute, engine not running.
    2. With the scan tool check for active DTCs.

       Is the DTC active?

       Yes

       - Go To 2.

No

- Perform the INTERMITTENT CONDITION diagnostic procedure. Refer to **INTERMITTENT CONDITION - 6.7L** .

2. **CHECK THE (K473) DIESEL EXHAUST FLUID ENGINE COOLANT CONTROL VALVE SIGNAL CIRCUIT FOR AN OPEN/HIGH RESISTANCE**

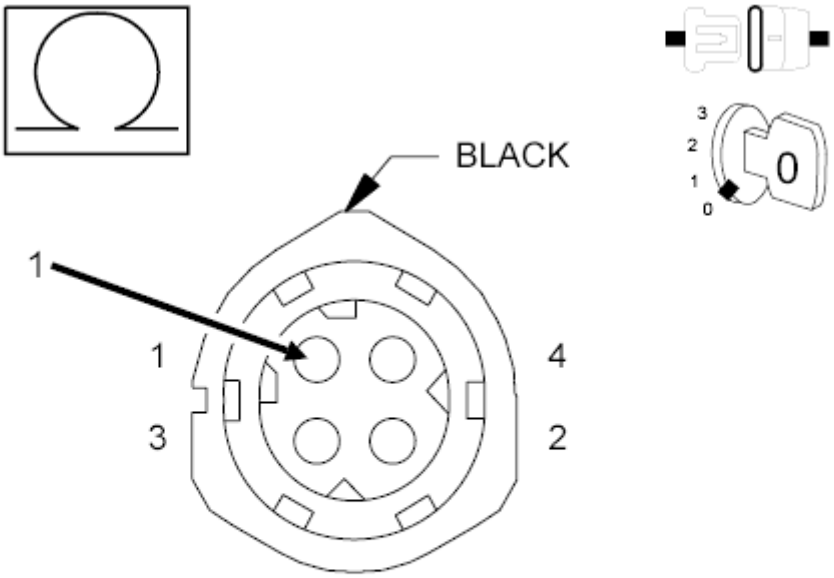

VALVE-
ENGINE
COOLANT
CONTROL
(6.7L)

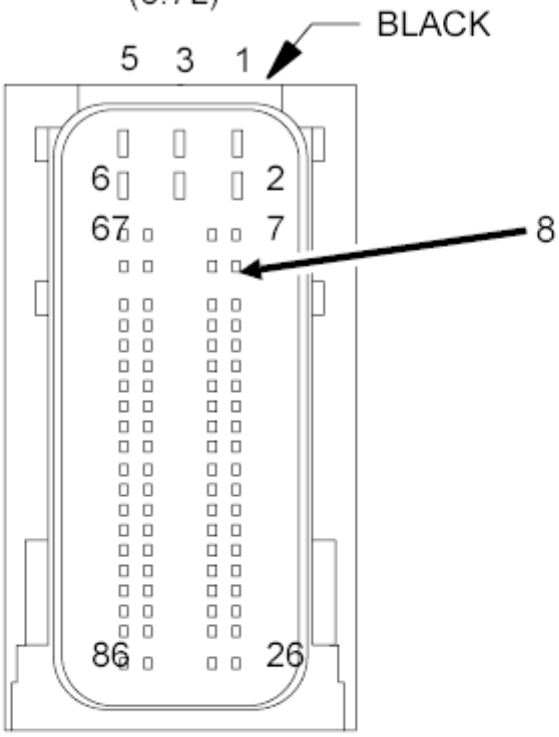

UNIT-
DIESEL
EXHAUST
FLUID-
DOSING
CONTROL 21

Fig. 25: Checking Diesel Exhaust Fluid Engine Coolant Control Valve Signal Circuit For An Open Or High Resistance
Courtesy of CHRYSLER GROUP, LLC

1. Turn ignition off.
2. Disconnect the DEF Engine Coolant Control Valve harness connector.
3. Disconnect the DEF Dosing Control Unit C1 harness connector.
4. Measure the resistance of the (K473) DEF Engine Coolant Control Valve Signal circuit between the DEF Tank Level/Temperature Sensor harness connector and the Diesel Exhaust Fluid Control Unit C1 harness connector.

   Is the resistance below 5.0 Ohms?

   Yes

   - Go To 3.

   No

   - Repair the (K473) DEF Engine Coolant Control Valve Signal circuit for an open or high resistance.
   - Perform the POWERTRAIN VERIFICATION TEST. Refer to **POWERTRAIN VERIFICATION TEST - 6.7L** .

3. **CHECK THE (K474) DIESEL EXHAUST FLUID ENGINE COOLANT CONTROL VALVE RETURN CIRCUIT FOR AN OPEN/HIGH RESISTANCE**

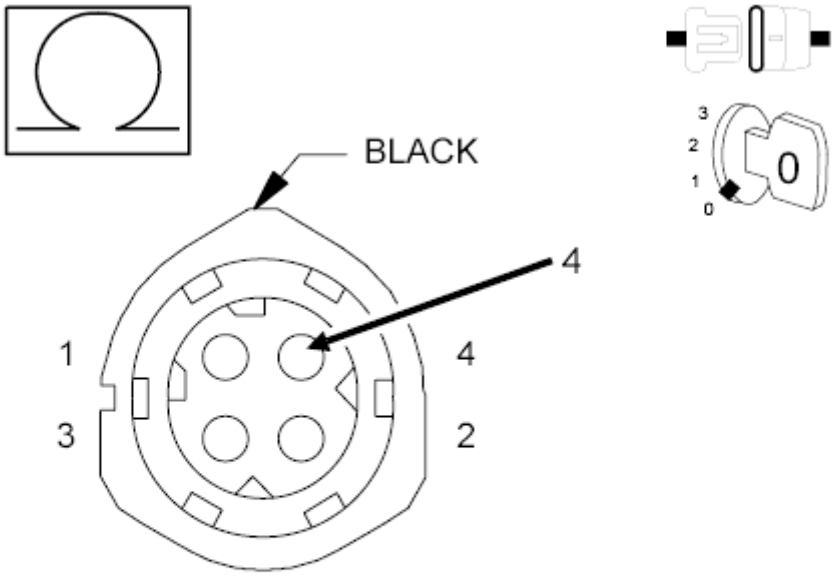

VALVE-
ENGINE
COOLANT
CONTROL
(6.7L)

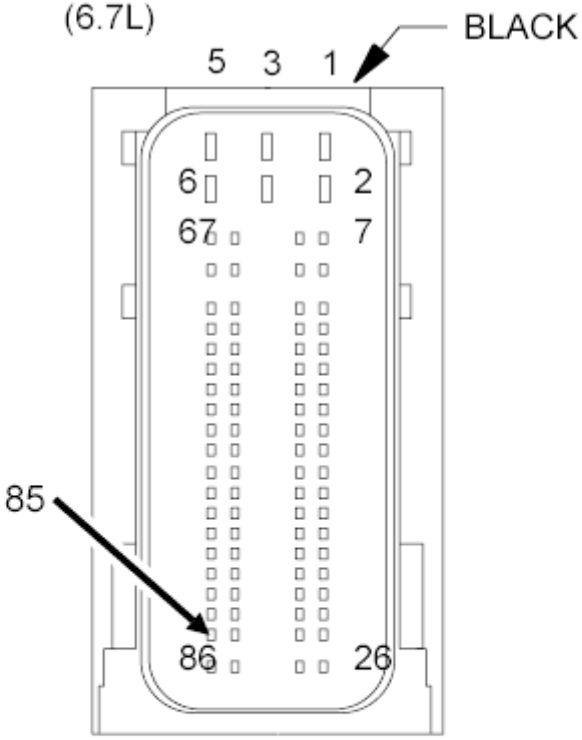

UNIT-
DIESEL
EXHAUST
FLUID-
DOSING
CONTROL C1

Fig. 26: Checking Diesel Exhaust Fluid Engine Coolant Control Valve Return Circuit For An Open/High Resistance
Courtesy of CHRYSLER GROUP, LLC

1. Measure the resistance of the (K474) DEF Engine Coolant Control Valve Return circuit between the DEF Tank Level/Temperature Sensor harness connector and the DEF Dosing Control Unit C1 harness connector.

   Is the resistance below 5.0 Ohms?

   Yes

   - Go To 4.

   No

   - Repair the (K474) DEF Engine Coolant Control Valve Return circuit for an open or high resistance.
   - Perform the POWERTRAIN VERIFICATION TEST. Refer to **POWERTRAIN VERIFICATION TEST - 6.7L** .

4. **CHECK FOR THE (K473) DIESEL EXHAUST FLUID ENGINE COOLANT CONTROL VALVE SIGNAL CIRCUIT SHORTED TO THE (K474) DIESEL EXHAUST FLUID ENGINE COOLANT CONTROL VALVE RETURN CIRCUIT**
   1. Measure the resistance between the (K473) DEF Engine Coolant Control Valve Signal circuit and the (K474) DEF Engine Coolant Control Valve Return circuit at the DEF Engine Coolant Control Valve harness connector.

      Is the resistance above 10k Ohms?

      Yes

      - Go To 5.

      No

      - Repair the short between the (K473) DEF Engine Coolant Control Valve Signal circuit and the (K474) DEF Engine Coolant Control Valve Return circuit.
      - Perform the POWERTRAIN VERIFICATION TEST. Refer to **POWERTRAIN VERIFICATION TEST - 6.7L** .

5. **CHECK THE (K473) DIESEL EXHAUST FLUID ENGINE COOLANT CONTROL VALVE SIGNAL CIRCUIT FOR A SHORT TO ANOTHER CIRCUIT**
   1. Measure the resistance between the (K473) DEF Engine Coolant Control Valve Signal circuit and all other circuits at the DEF Dosing Control Unit C1 harness connector.

      Is the resistance above 10k Ohms between the (K473) DEF Engine Coolant Control Valve Signal circuit and all other circuits?

Yes

- Go To 6.

No

- Repair the (K473) DEF Engine Coolant Control Valve Signal circuit for a short to the circuit that measured below 10k Ohms.
- Perform the POWERTRAIN VERIFICATION TEST. Refer to **POWERTRAIN VERIFICATION TEST - 6.7L** .

6. **DIESEL EXHAUST FLUID ENGINE COOLANT CONTROL VALVE**
   1. Turn ignition off.
   2. Reconnect the DEF Dosing Control Unit C1 harness connector.
   3. Turn ignition on.
   4. With a scan tool, View DTCs.

   Does the scan tool display DTC P202A as active and P202C as stored with the DEF Dosing Control Unit C1 harness connector disconnected?

   Yes

   - Replace the DEF Engine Coolant Control Valve in accordance with the service information. Refer to **VALVE, DIESEL EXHAUST FLUID ENGINE COOLANT CONTROL, REMOVAL** .
   - Perform the POWERTRAIN VERIFICATION TEST. Refer to **POWERTRAIN VERIFICATION TEST - 6.7L** .

   No

   - Replace the DEF Dosing Control Unit in accordance with the service information. Refer to **UNIT, DIESEL EXHAUST FLUID DOSING CONTROL, REMOVAL** .
   - Perform the POWERTRAIN VERIFICATION TEST. Refer to **POWERTRAIN VERIFICATION TEST - 6.7L** .

P202E-(DIESEL EXHAUST FLUID) REDUCTANT INJECTOR PERFORMANCE

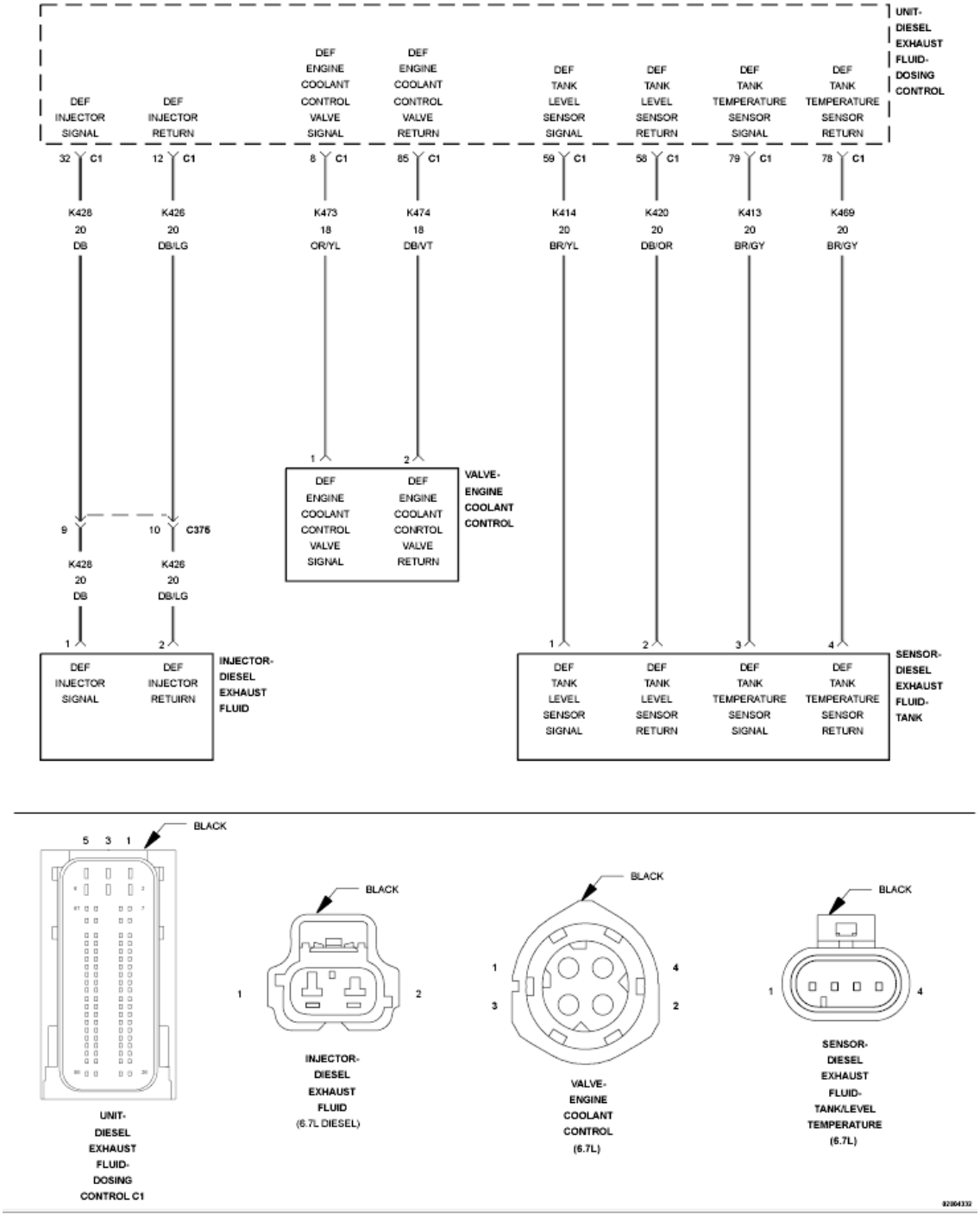

Fig. 27: Diesel Exhaust Fluid Reductant Tank Heater Control Circuit Wiring Diagram
Courtesy of CHRYSLER GROUP, LLC

For a complete wiring diagram, **refer to appropriate SYSTEM WIRING DIAGRAMS article** .

THEORY OF OPERATION

The Diesel Exhaust Fluid (DEF) Injector is mounted to the decomposition tube at the inlet of the Selective

Catalytic Reduction (SCR) Catalyst. The DEF Dosing Control Unit sends a Pulse Width Modulated (PWM) signal to DEF Injector to vary the amount of fluid sprayed into the exhaust stream. The DEF Dosing Control Unit will illuminate the MIL lamp via the Powertrain Control Module (PCM) after this diagnostic runs and fails in two consecutive trips and diesel exhaust fluid injection into the aftertreatment system is disabled. The DEF Dosing Control Unit will turn off the MIL lamp via the PCM immediately after the diagnostic runs and passes for three consecutive key cycles.

WHEN MONITORED:

This monitor runs when the DEF Injector is being commanded on.

SET CONDITION:

The DEF Dosing Control Unit detects mechanical failure of the DEF Injector.

POSSIBLE CAUSES

Possible Causes
(K428) DIESEL EXHAUST FLUID INJECTOR SIGNAL CIRCUIT SHORTED TO ANOTHER CIRCUIT
(K426) DIESEL EXHAUST FLUID INJECTOR RETURN CIRCUIT SHORTED TO ANOTHER CIRCUIT
DIESEL EXHAUST FLUID INJECTOR

Always perform the Pre-Diagnostic Troubleshooting procedure before proceeding. Refer to PRE-DIAGNOSTIC TROUBLESHOOTING PROCEDURE - 6.7L .

DIAGNOSTIC TEST

1. **ACTIVE DTC**
    1. Turn the ignition on for one minute, engine not running.
    2. With the scan tool, navigate to Systems Tests and actuate the Diesel Exhaust Fluid Doser Pump Override Test.
    3. With the scan tool, View DTCs.

    Is the DTC active?

    Yes

    - Go To 2.

    No

    - Perform the INTERMITTENT CONDITION diagnostic procedure. Refer to **INTERMITTENT CONDITION - 6.7L** .
2. **CHECK FOR THE (K428) DEF INJECTOR SIGNAL CIRCUIT SHORTED TO ANOTHER**

CIRCUIT

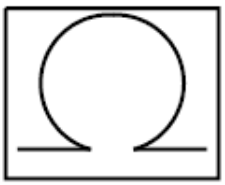

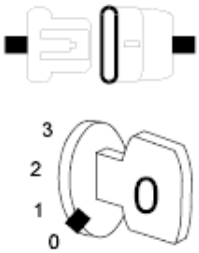

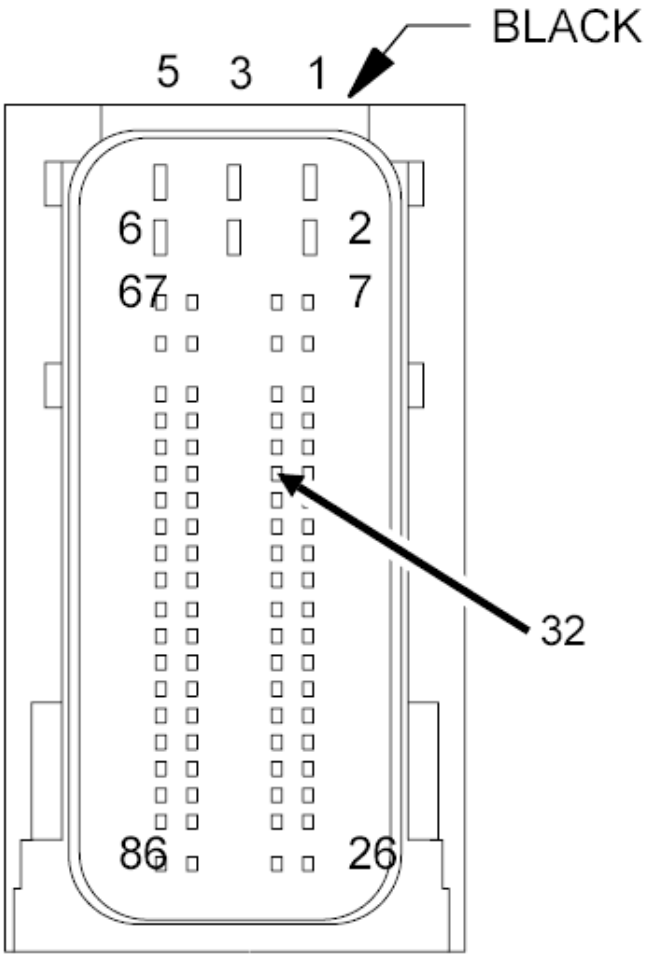

UNIT-
DIESEL
EXHAUST
FLUID-
DOSING
CONTROL C1

Fig. 28: Checking DEF Injector Signal Circuit For A Short
Courtesy of CHRYSLER GROUP, LLC

1. Turn ignition off.
2. Disconnect the DEF Injector harness connector.
3. Disconnect the DEF Dosing Control Unit C1 harness connector.
4. Measure the resistance between the (K428) DEF Injector Signal circuit and all other circuits at the DEF Dosing Control Unit C1 harness connector.

   Is the resistance above 10k Ohms between the (K428) DEF Injector Signal circuit and all other circuits?

   Yes

   - Go To 3.

   No

   - Repair the short between the (K428) DEF Injector Signal circuit and the circuit that measured below 10k Ohms.
   - Perform the POWERTRAIN VERIFICATION TEST. Refer to **POWERTRAIN VERIFICATION TEST - 6.7L** .

3. **CHECK FOR THE (K426) DEF INJECTOR RETURN CIRCUIT SHORTED TO ANOTHER CIRCUIT**

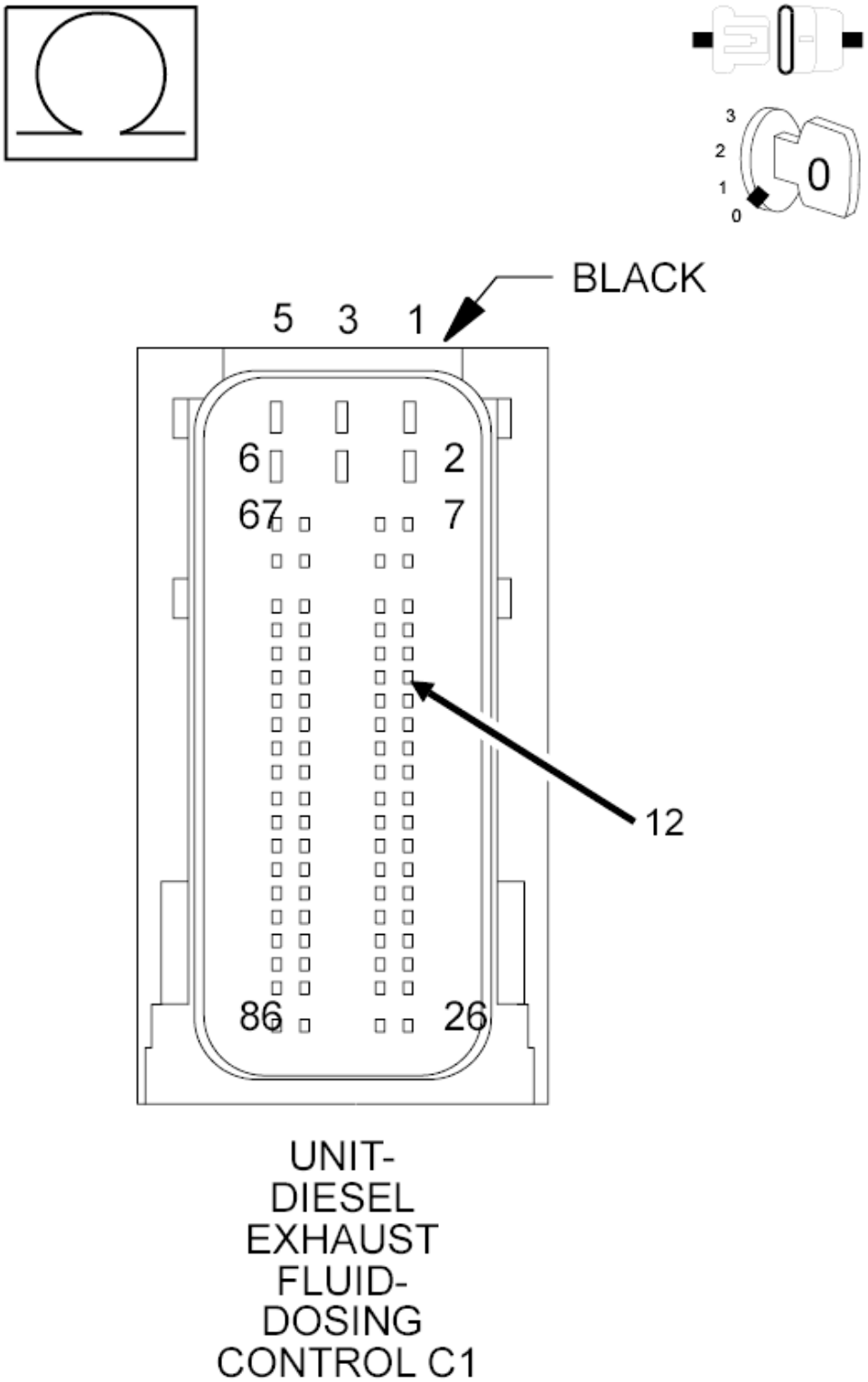

Fig. 29: Checking DEF Injector Return Circuit For A Short
Courtesy of CHRYSLER GROUP, LLC

1. Measure the resistance between the (K426) DEF Injector Return circuit and all other circuits at the DEF Dosing Control Unit C1 harness connector.

   Is the resistance above 10k Ohms between the (K426) DEF Injector Return circuit and all other circuits?

   Yes

   - Go To 4.

   No

   - Repair the short between the (K428) DEF Injector Return circuit and the circuit that measured below 10k Ohms.
   - Perform the POWERTRAIN VERIFICATION TEST. Refer to **POWERTRAIN VERIFICATION TEST - 6.7L** .

4. **DEF INJECTOR**
   1. Turn ignition off.
   2. Reconnect the DEF Dosing Control Unit C1 harness connector.
   3. Remove the DEF Injector from the decomposition tube.
   4. Reconnect the DEF Injector harness connector.
   5. Place the DEF Injector in a container to capture the fluid sprayed.
   6. Turn the ignition on.
   7. With the scan tool, navigate to Systems Tests and actuate the Diesel Exhaust Fluid Doser Pump Override Test.

      NOTE: **This Test will run for six minutes before timing out. The amount of flow may fluctuate through out the test, therefore the test must be allowed to run completely in order for the results to be accurate. The fluid should spray out as a mist. There should be no dripping from the holes in the DEF Injector at any time during the duration of the test procedure.**

   8. Measure the amount of fluid sprayed after the test times out.

      Does the fluid sprayed measure between 85 ml and 115 ml?

      Yes

      - The DEF Injector is functioning properly. Remove the DEF Pressure line from the DEF Injector and DEF Supply Pump Assembly and check the fittings for a partial restriction which could cause an intermittent low flow condition.
      - Perform the POWERTRAIN VERIFICATION TEST. Refer to **POWERTRAIN VERIFICATION TEST - 6.7L** .

No

- Replace the DEF Injector in accordance with the service information. Refer to **INJECTOR, DIESEL EXHAUST FLUID, REMOVAL** .
- Perform the POWERTRAIN VERIFICATION TEST. Refer to **POWERTRAIN VERIFICATION TEST - 6.7L** .

P2032-EXHAUST GAS TEMPERATURE SENSOR CIRCUIT LOW- BANK 1 SENSOR 2

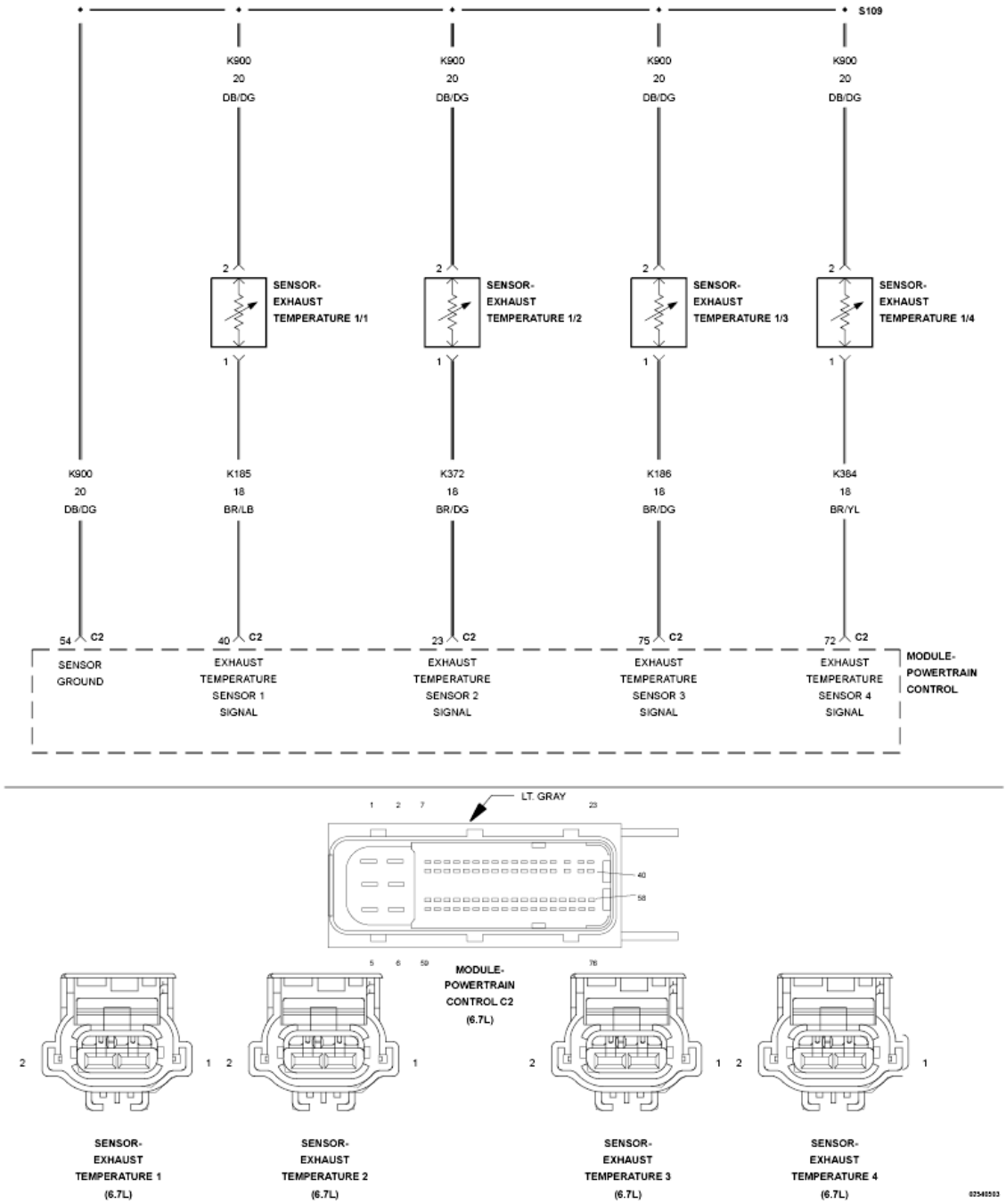

Fig. 30: Exhaust Gas Temperature Sensor Circuit Schematic

Courtesy of CHRYSLER GROUP, LLC

For a complete wiring diagram, **refer to appropriate SYSTEM WIRING DIAGRAMS article** .

THEORY OF OPERATION

The Exhaust Temperature Sensors are used by the Powertrain Control Module (PCM) to monitor the engine exhaust temperatures in the aftertreatment system. The Exhaust Temperature Sensors are thermistors and change resistance based on the temperature being measured. The Exhaust Temperature Sensors receive a 5-Volt signal from the PCM and share a sensor ground. The PCM monitors the change in signal voltage and converts this to a temperature value. The PCM illuminates the MIL lamp when the monitor runs and fails in two consecutive trips. A default value will be used for the Exhaust Temperature Sensor 1/2 and active regeneration of the Diesel Particulate Filter will be disabled. The PCM will turn off the MIL light immediately after the diagnostic runs and passes in four consecutive drive cycles.

WHEN MONITORED:

Any time the Powertrain Control Module is powered up.

SET CONDITION:

The Exhaust Temperature Sensor Signal circuit is below 0.08 Volts for 2.0 seconds.

POSSIBLE CAUSES

Possible Causes
(K372) EXHAUST GAS TEMPERATURE 1/2 SIGNAL CIRCUIT SHORTED TO GROUND
(K372) EXHAUST GAS TEMPERATURE 1/2 SIGNAL CIRCUIT SHORTED TO THE (K900) SENSOR GROUND CIRCUIT
EXHAUST GAS TEMPERATURE SENSOR 1/2
POWERTRAIN CONTROL MODULE (PCM)

Always perform the Pre-Diagnostic Troubleshooting procedure before proceeding. Refer to PRE-DIAGNOSTIC TROUBLESHOOTING PROCEDURE - 6.7L .

DIAGNOSTIC TEST

1. **ACTIVE DTC**
    1. Turn the ignition on.
    2. With the scan tool, record all Freeze frame data.
    3. With the scan tool, erase DTCs.
    4. Turn the ignition off for 75 seconds.
    5. Turn the ignition on.
    6. With the scan tool, read DTCs.

Did the DTC reset?

Yes

- Go To 2.

No

- Perform the INTERMITTENT CONDITION diagnostic procedure. Refer to **INTERMITTENT CONDITION - 6.7L** .

2. **CHECK THE (K372) EXHAUST TEMPERATURE 1/2 SIGNAL CIRCUIT FOR A SHORT TO GROUND**

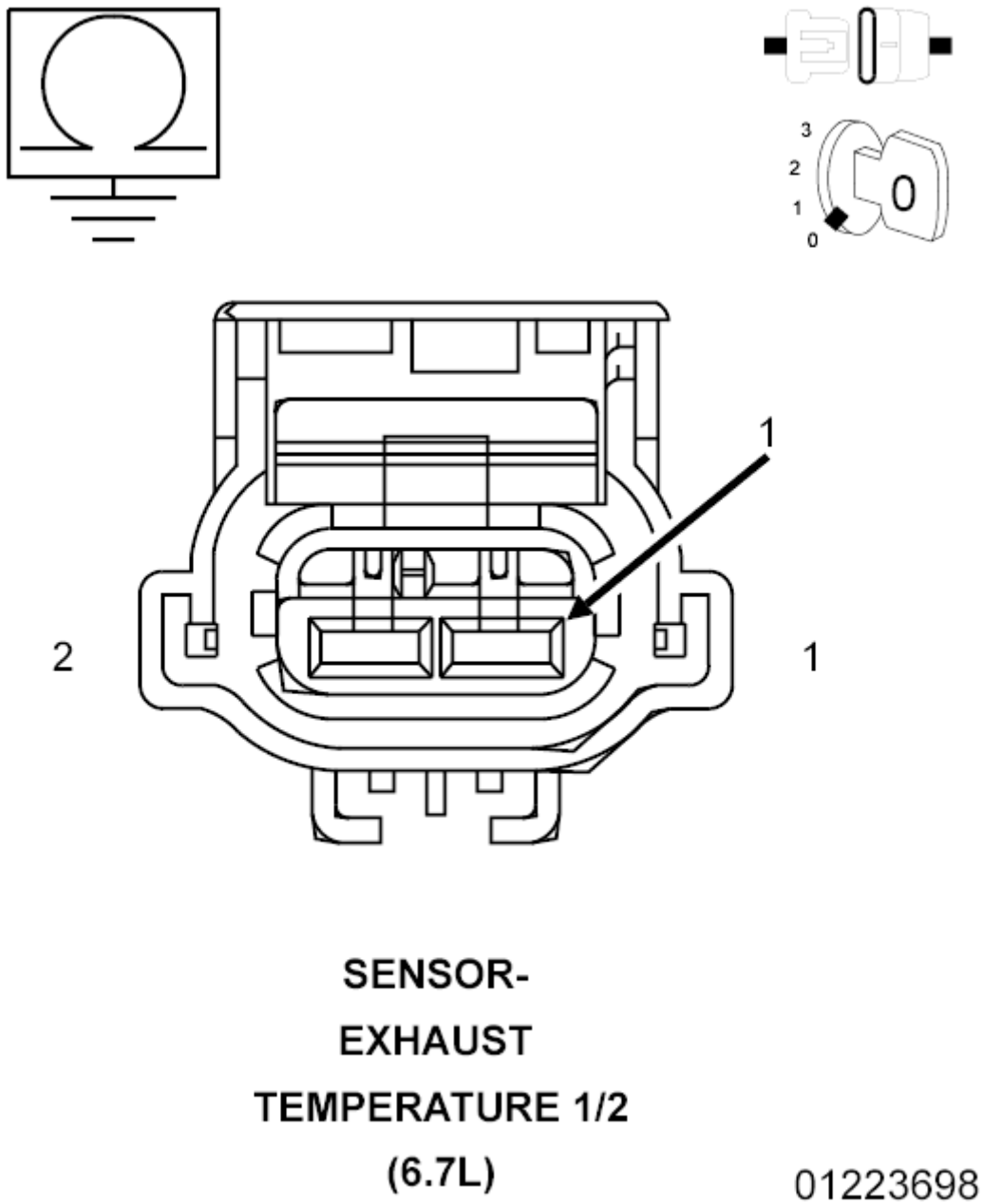

Fig. 31: Checking Exhaust Temperature 1/2 Signal Circuit For Short To Ground
Courtesy of CHRYSLER GROUP, LLC

1. Turn the ignition off.
2. Disconnect the Exhaust Gas Temperature Sensor 1/2 harness connector.
3. Disconnect the PCM C2 harness connector.
4. Measure the resistance between ground and the (K372) Exhaust Gas Temperature Sensor 1/2 Signal circuit at the sensor Exhaust Gas Temperature 1/2 harness connector.

   Is the resistance below 10k Ohms?

Yes

- Repair the (K372) Exhaust Gas Temperature Sensor 1/2 Signal circuit for a short to ground.
- Perform the POWERTRAIN VERIFICATION TEST. Refer to **POWERTRAIN VERIFICATION TEST - 6.7L** .

No

- Go To 3.

3. **CHECK FOR THE (K372) EXHAUST TEMPERATURE 1/2 SIGNAL CIRCUIT SHORTED TO THE (K900) SENSOR GROUND CIRCUIT**

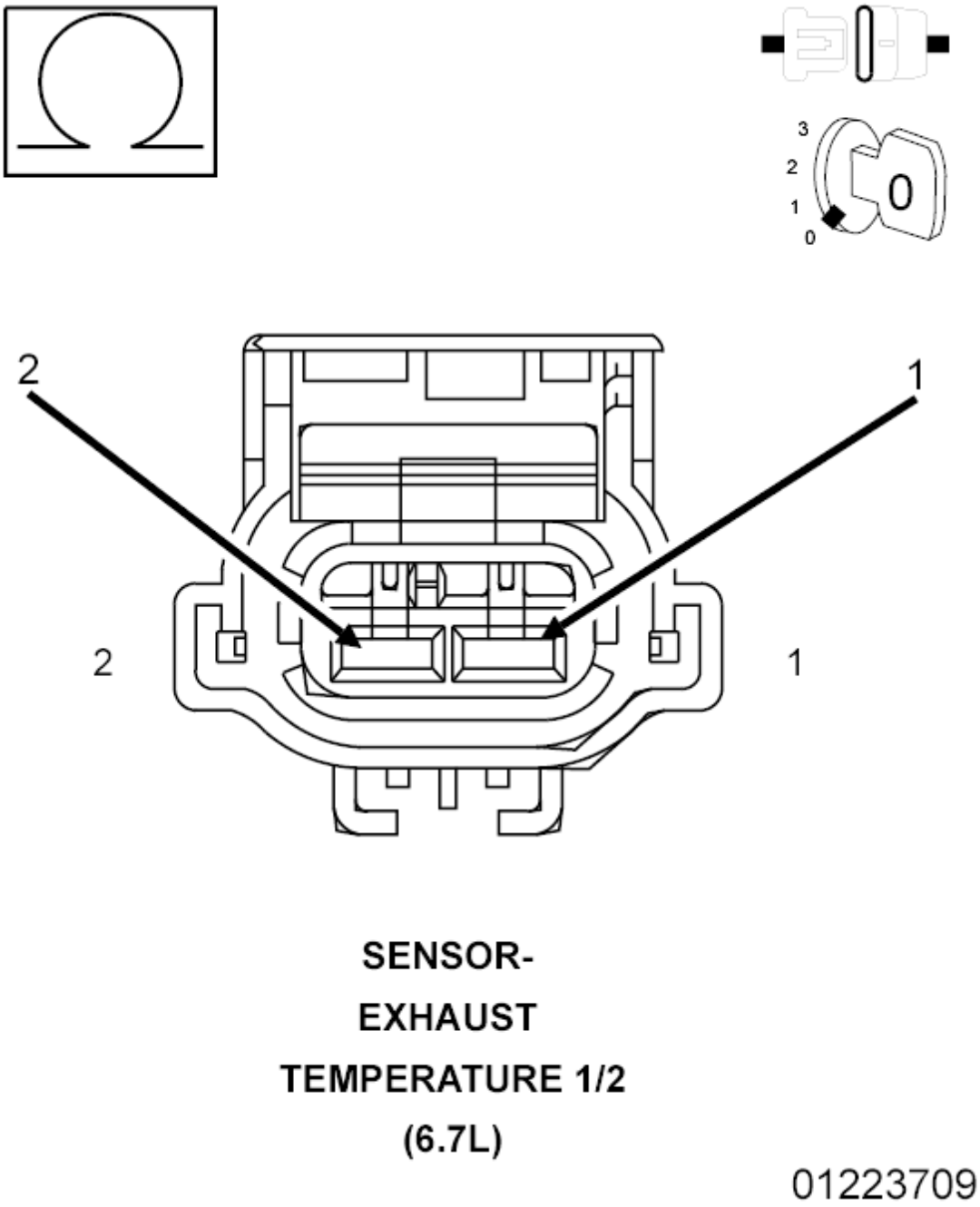

Fig. 32: Checking Exhaust Temperature 1/2 Signal Circuit Shorted To Sensor Ground Circuit
Courtesy of CHRYSLER GROUP, LLC

1. Measure the resistance between the (K372) Exhaust Gas Temperature Sensor 1/2 Signal circuit and (K900) Sensor Ground circuit at the Exhaust Gas Temperature Sensor 1/2 harness connector.

   Is the resistance below 10k Ohms?

   Yes

- Repair the short between the (K372) Exhaust Gas Temperature Sensor 1/2 Signal circuit and (K900) Sensor Ground circuit.
- Perform the POWERTRAIN VERIFICATION TEST. Refer to **POWERTRAIN VERIFICATION TEST - 6.7L** .

No

- Go To 4.

4. **CHECK THE EXHAUST GAS TEMPERATURE SENSOR**
   1. Reconnect the Exhaust Gas Temperature Sensor 1/2 harness connector.
   2. Reconnect the PCM C2 harness connector.
   3. Turn the ignition on.
   4. With the scan tool, erase DTCs.
   5. Turn the ignition off for 75 seconds.
   6. Disconnect the Exhaust Gas Temperature Sensor 1/2 harness connector.
   7. Turn the ignition on.
   8. With the scan tool, read DTCs.

   Does the DTC P2033 become active?

   Yes

   - Replace the Exhaust Gas Temperature Sensor 1/2 in accordance with the service information.
   - Perform the POWERTRAIN VERIFICATION TEST. Refer to **POWERTRAIN VERIFICATION TEST - 6.7L** .

   No

   - Replace and program the Powertrain Control Module in accordance with the service information. Refer to **PCM - REMOVAL** , also see **PCM/ECM / TCM PROGRAMMING** .
   - Perform the POWERTRAIN VERIFICATION TEST. Refer to **POWERTRAIN VERIFICATION TEST - 6.7L** .

P2033-EXHAUST GAS TEMPERATURE SENSOR CIRCUIT HIGH - BANK 1 SENSOR 2

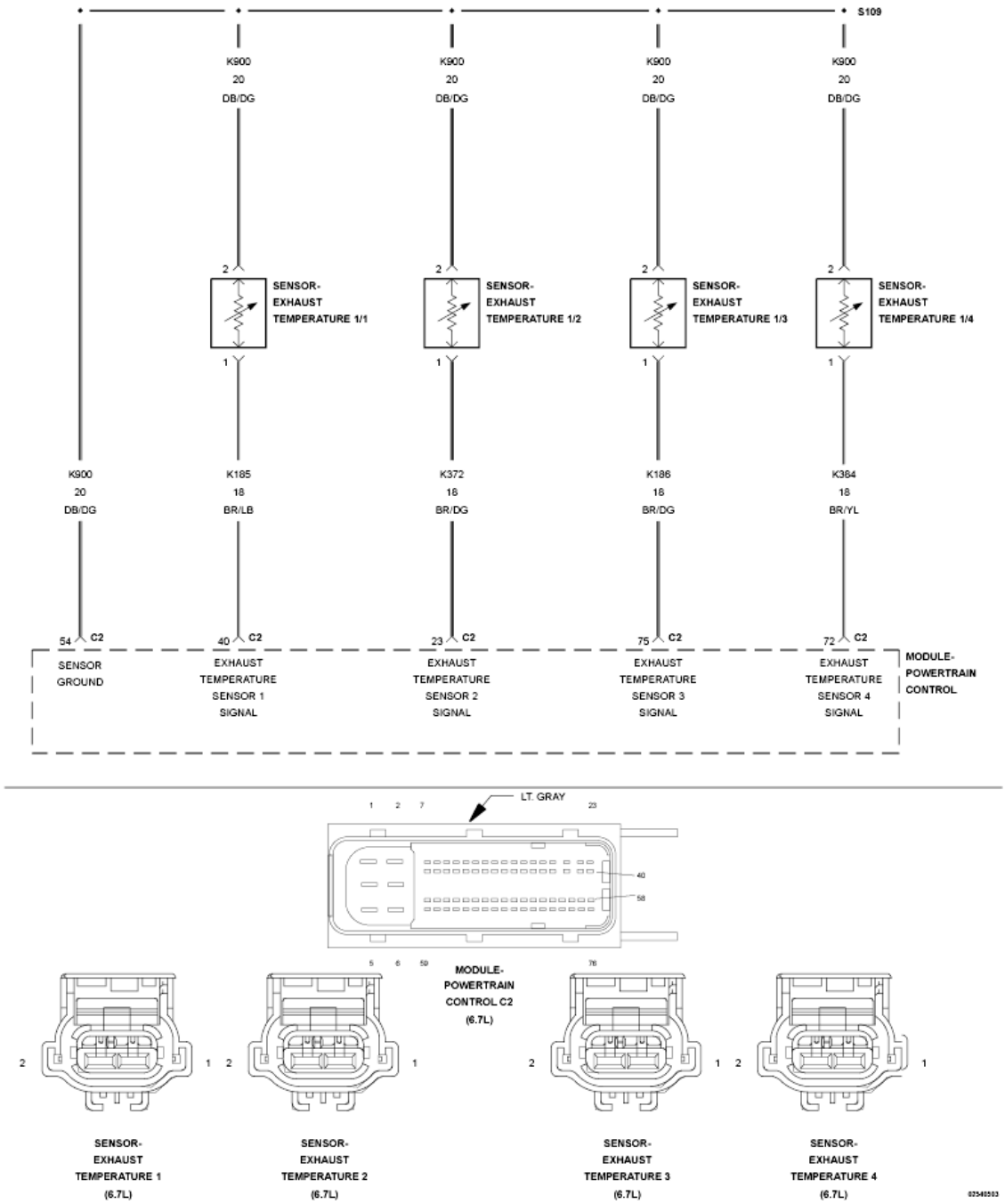

Fig. 33: Exhaust Gas Temperature Sensor Circuit Schematic
Courtesy of CHRYSLER GROUP, LLC

For a complete wiring diagram, **refer to appropriate SYSTEM WIRING DIAGRAMS article** .

THEORY OF OPERATION

The Exhaust Temperature Sensors are used by the Powertrain Control Module (PCM) to monitor the engine exhaust temperatures in the aftertreatment system. The Exhaust Temperature Sensors are thermistors and change resistance based on the temperature being measured. The Exhaust Temperature Sensors receive a 5-Volt

signal from the PCM and share a sensor ground. The PCM monitors the change in signal voltage and converts this to a temperature value. The PCM illuminates the MIL lamp immediately when the diagnostic runs and fails. A default value will be used for the Exhaust Temperature Sensor 1/2 and active regeneration of the diesel particulate filter will be disabled. The PCM will turn off the MIL light immediately after the diagnostic runs and passes in four consecutive drive cycles.

WHEN MONITORED:

Any time the Powertrain Control Module is powered up.

SET CONDITION:

The Exhaust Temperature Sensor 1/2 Signal circuit is above 4.88 Volts for 2.0 seconds.

POSSIBLE CAUSES

Possible Causes
(K372) EXHAUST GAS TEMPERATURE SENSOR 1/2 SIGNAL CIRCUIT SHORTED TO VOLTAGE
(K372) EXHAUST GAS TEMPERATURE SENSOR 1/2 SIGNAL CIRCUIT OPEN/HIGH RESISTANCE
(K900) SENSOR GROUND CIRCUIT OPEN/HIGH RESISTANCE
EXTREME COLD AMBIENT TEMPERATURE AT ENGINE START
EXHAUST GAS TEMPERATURE SENSOR
POWERTRAIN CONTROL MODULE (PCM)

Always perform the Pre-Diagnostic Troubleshooting procedure before proceeding. Refer to PRE-DIAGNOSTIC TROUBLESHOOTING PROCEDURE - 6.7L .

DIAGNOSTIC TEST

1. **ACTIVE DTC**
    1. Turn the ignition on.
    2. With the scan tool, record all Freeze frame data.

        NOTE: Starting the vehicle under extreme cold conditions may cause this DTC to set. Check the ambient and/or coolant temperature in freeze frame data to see if this is the possible cause.

    3. With the scan tool, erase DTCs.
    4. Turn the ignition off for 75 seconds.
    5. Turn the ignition on.
    6. With the scan tool, read DTCs.

        Did the DTC reset?

Yes

- Go To 2.

No

- Perform the INTERMITTENT CONDITION diagnostic procedure. Refer to **INTERMITTENT CONDITION - 6.7L** .

2. **CHECK THE (K372) EXHAUST GAS TEMPERATURE 1/2 SIGNAL CIRCUIT FOR A SHORT TO VOLTAGE**

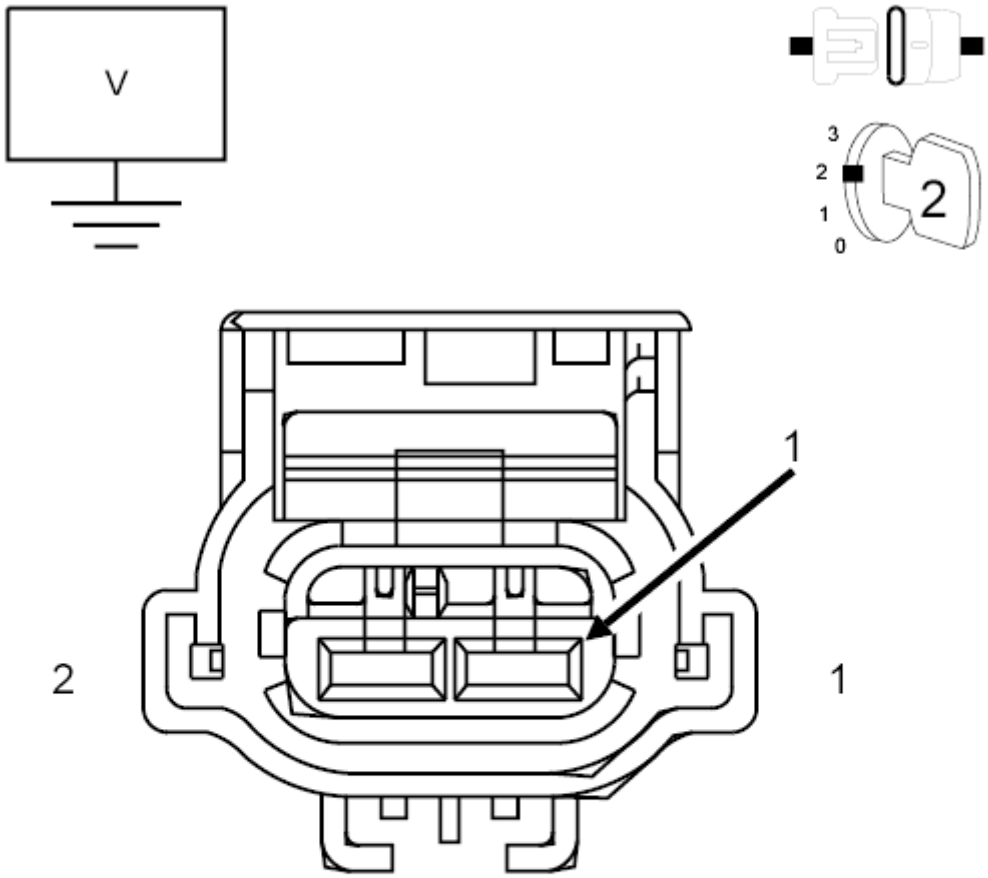

SENSOR-

EXHAUST

TEMPERATURE 1/2

(6.7L)

01223720

Fig. 34: Checking Exhaust Gas Temperature 1/2 Signal Circuit For Short To Voltage
Courtesy of CHRYSLER GROUP, LLC

1. Disconnect the Exhaust Temperature Sensor 1/2 harness connector.

   NOTE: Check connectors - Clean/repair as necessary.

2. Measure the voltage on the (K372) Exhaust Gas Temperature Sensor 1/2 Signal circuit at the Exhaust Temperature Sensor 1/2 harness connector.

   Is the voltage reading above 5.1 volts?

   Yes

   - Repair the (K372) Exhaust Gas Temperature Sensor 1/2 Signal circuit for a short to voltage.
   - Perform the POWERTRAIN VERIFICATION TEST. Refer to **POWERTRAIN VERIFICATION TEST - 6.7L** .

   No

   - Go To 3.

3. **CHECK THE (K372) EXHAUST GAS TEMPERATURE 1/2 SIGNAL CIRCUIT FOR AN OPEN/HIGH RESISTANCE**

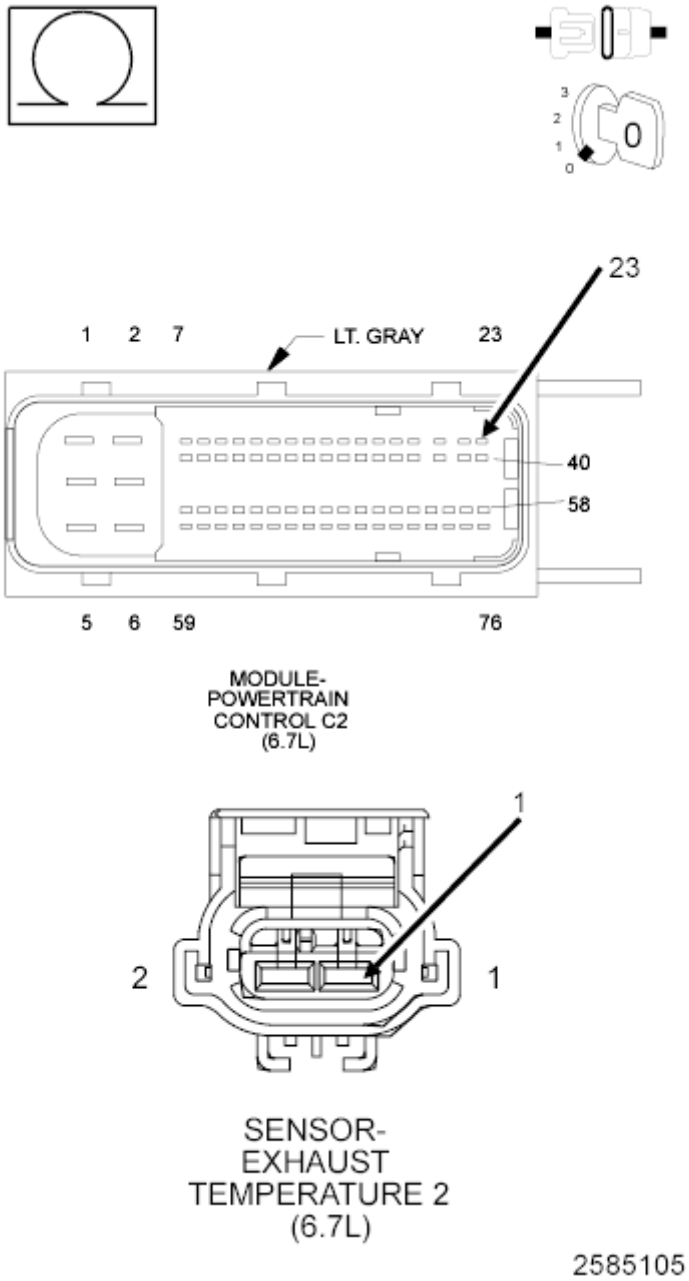

Fig. 35: Checking Exhaust Gas Temperature 1/2 Signal Circuit For An Open Or High Resistance
Courtesy of CHRYSLER GROUP, LLC

1. Turn the ignition off.
2. Disconnect the PCM C2 harness connector.
3. Measure the resistance of the (K372) Exhaust Gas Temperature Sensor 1/2 Signal circuit between the Exhaust Gas Temperature Sensor 1/2 harness connector and the PCM C2 harness connector.

   Is the resistance below 5.0 Ohms?

   Yes

- Go To 4.

No

- Repair the (K372) Exhaust Temperature 1/2 Signal circuit for an open or high resistance.
- Perform the POWERTRAIN VERIFICATION TEST. Refer to **POWERTRAIN VERIFICATION TEST - 6.7L** .

4. **CHECK THE (K900) SENSOR GROUND CIRCUIT FOR AN OPEN/HIGH RESISTANCE**

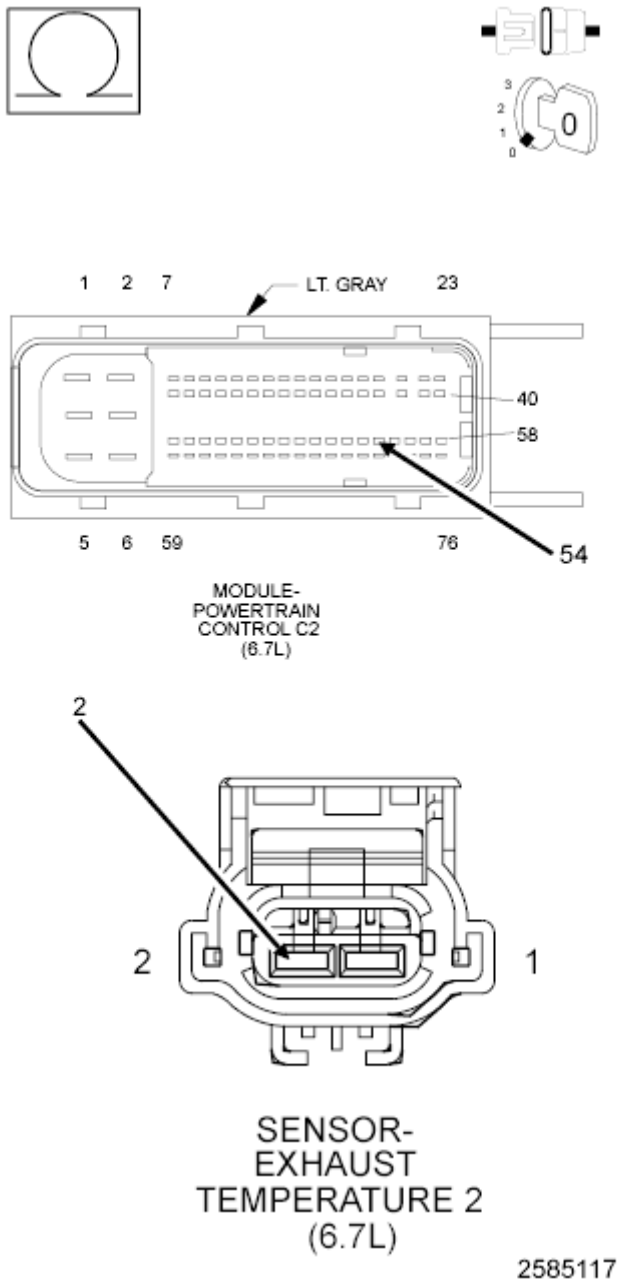

Fig. 36: Measuring Resistance Of Sensor Ground Circuit Between Exhaust Gas Temperature

Sensor 1/2 Harness Connector & PCM C2 Harness Connector
Courtesy of CHRYSLER GROUP, LLC

1. Measure the resistance of the (K900) Sensor Ground circuit between the Exhaust Gas Temperature Sensor 1/2 harness connector and the PCM C2 harness connector.

   Is the resistance below 5.0 Ohms?

   Yes

   - Go To 5.

   No

   - Repair the (K900) Sensor ground circuit for an open or high resistance.
   - Perform the POWERTRAIN VERIFICATION TEST. Refer to **POWERTRAIN VERIFICATION TEST - 6.7L** .

5. **CHECK THE EXHAUST GAS TEMPERATURE SENSOR**
   1. Turn the ignition on.
   2. While monitoring the scan tool, connect a jumper across the Exhaust Gas Temperature Sensor 1/2 harness connector for at least five seconds.

      Does the DTC P2032 become active?

      Yes

      - Replace the Exhaust Gas Temperature Sensor 1/2.
      - Perform the POWERTRAIN VERIFICATION TEST. Refer to **POWERTRAIN VERIFICATION TEST - 6.7L** .

      No

      - Replace the Powertrain Control Module in accordance with the service information.
      - Perform the POWERTRAIN VERIFICATION TEST. Refer to **POWERTRAIN VERIFICATION TEST - 6.7L** .

P203C-(DIESEL EXHAUST FLUID) REDUCTANT LEVEL SENSOR CIRCUIT LOW

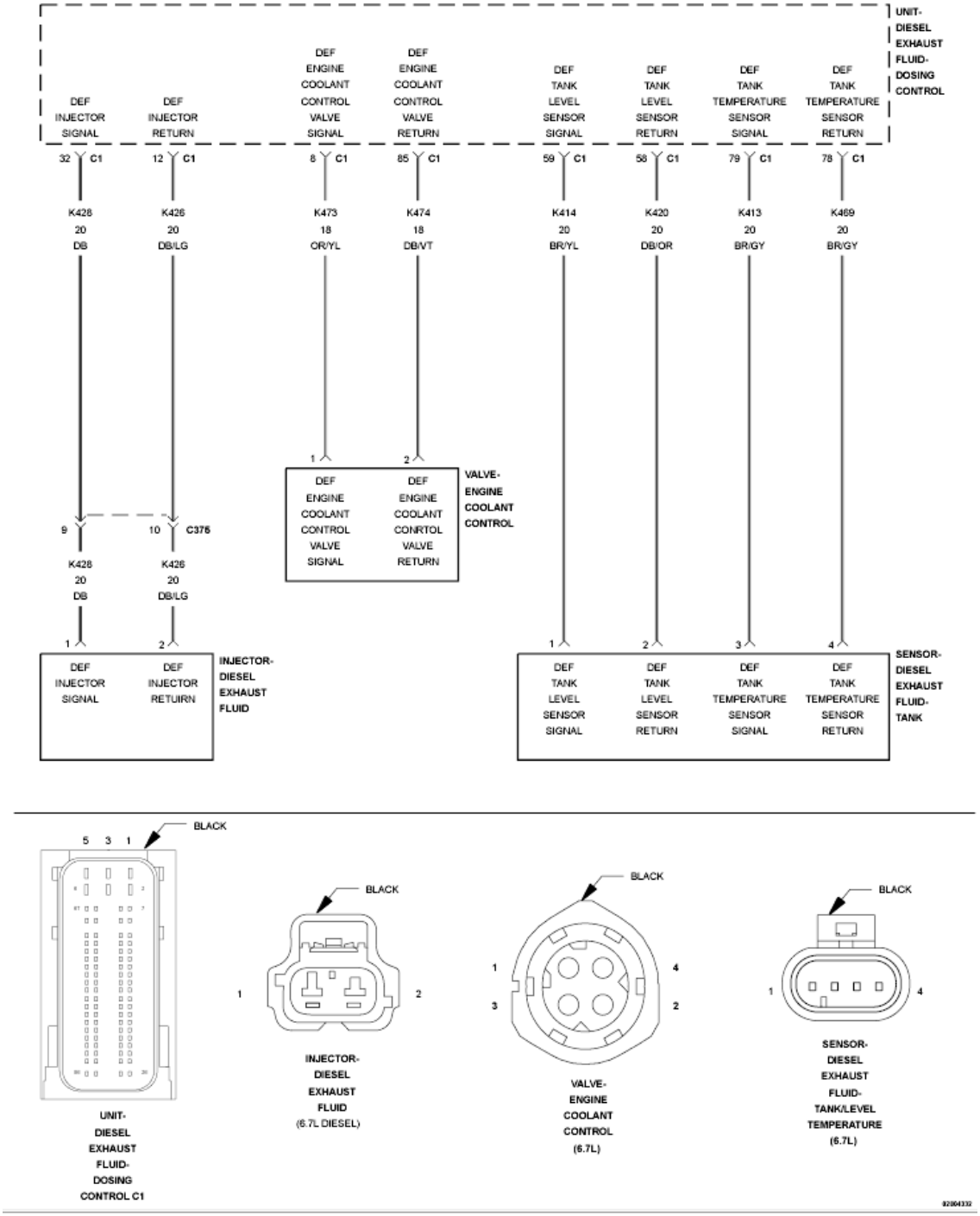

Fig. 37: Diesel Exhaust Fluid Reductant Tank Heater Control Circuit Wiring Diagram
Courtesy of CHRYSLER GROUP, LLC

For a complete wiring diagram, **refer to appropriate SYSTEM WIRING DIAGRAMS article** .

THEORY OF OPERATION

The Diesel Exhaust Fluid (DEF) Tank Level Sensor and Diesel Exhaust Fluid (DEF) Tank Temperature Sensor

are a combination sensor used to measure the level and temperature of the fluid inside the DEF Tank. Though combined, the level sensor and the temperature sensor operate independent of each other. Both sensors operate as a two wire 5-Volt sensor. The DEF Tank Level Sensor is a 14 point magnetic reed switch sensor. The DEF Tank Temperature Sensor is a negative temperature coefficient sensor. The DEF Dosing Control Unit will illuminate the MIL lamp via the Powertrain Control Module (PCM) immediately after this diagnostic runs and fails. The DEF Dosing Control Unit will turn off the MIL lamp via the PCM immediately after the diagnostic runs and passes. The DEF system will continue to dose and the NOx monitor will continue to execute while the DTC is active.

WHEN MONITORED:

With the ignition on.

SET CONDITION:

The DEF Dosing Control Unit detects that the (K414) DEF Tank Level Sensor Signal circuit is below 0.25 of a Volt for one second.

POSSIBLE CAUSES

Possible Causes
(K414) DIESEL EXHAUST FLUID TANK LEVEL SENSOR SIGNAL CIRCUIT SHORTED TO GROUND
(K414) DEF TANK LEVEL SENSOR SIGNAL CIRCUIT SHORTED TO THE (K420) DIESEL EXHAUST FLUID TANK LEVEL SENSOR RETURN CIRCUIT
DIESEL EXHAUST FLUID TANK LEVEL SENSOR
DIESEL EXHAUST FLUID DOSING CONTROL UNIT

Always perform the Pre-Diagnostic Troubleshooting procedure before proceeding. Refer to PRE-DIAGNOSTIC TROUBLESHOOTING PROCEDURE - 6.7L .

DIAGNOSTIC TEST

1. **ACTIVE DTC**
    1. Turn the ignition on for one minute, engine not running.
    2. With the scan tool check for active DTCs.

       Is the DTC active?

       Yes

       - Go To 2.

       No

       - Perform the INTERMITTENT CONDITION diagnostic procedure. Refer to

INTERMITTENT CONDITION - 6.7L .

2. **CHECK THE DEF TANK LEVEL SENSOR**
    1. Ignition on, engine not running.
    2. Disconnect the DEF Tank Level/Temperature Sensor harness connector.
    3. With the scan tool check DTCs.
    4. Monitor the scan tool for one minute.

    Did DTC P203D set as active after disconnecting the sensor?

    Yes

    - Replace the DEF Tank Level/Temperature Sensor in accordance with the service information. Refer to **SENSOR, DIESEL EXHAUST FLUID LEVEL/TEMPERATURE, REMOVAL** .
    - Perform the POWERTRAIN VERIFICATION TEST. Refer to **POWERTRAIN VERIFICATION TEST - 6.7L** .

    No

    - Go To 3.
3. **CHECK THE (K414) DEF TANK LEVEL SENSOR SIGNAL CIRCUIT FOR A SHORT TO GROUND**

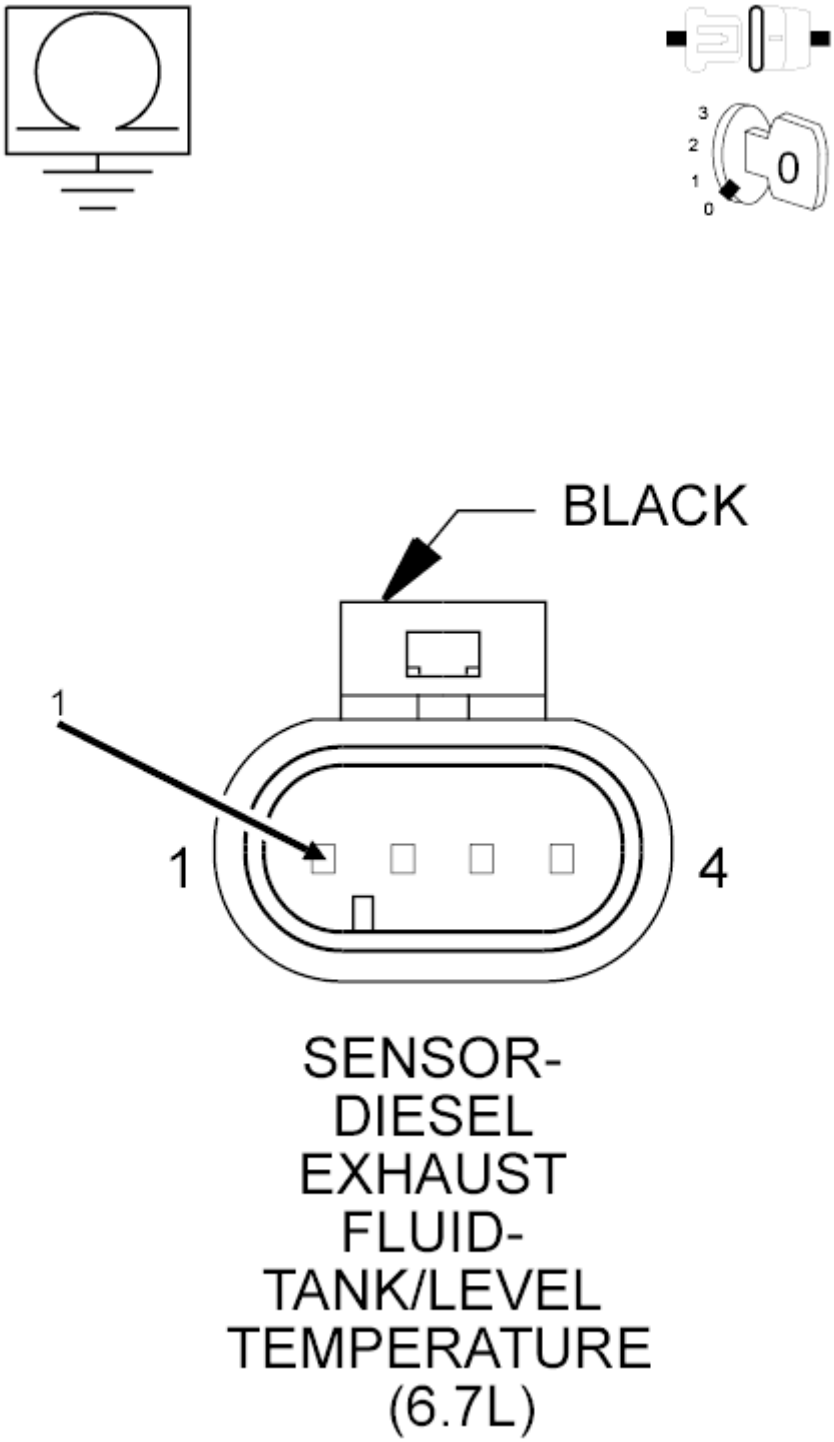

Fig. 38: Checking DEF Tank Level Sensor Signal Circuit For A Short To Ground
Courtesy of CHRYSLER GROUP, LLC

1. Turn ignition off.
2. Disconnect the DEF Dosing Control Unit C1 harness connector.

3. Measure the resistance between ground and the (K414) DEF Tank Level Sensor Signal circuit at the DEF Tank Level/Temperature Sensor harness connector.

   Is the resistance above 10k Ohms?

   Yes

   - Go To 4.

   No

   - Repair the (K414) DEF Tank Level Sensor Signal circuit for a short to ground.
   - Perform the POWERTRAIN VERIFICATION TEST. Refer to **POWERTRAIN VERIFICATION TEST - 6.7L** .

4. **CHECK FOR THE (K414) DEF TANK LEVEL SENSOR SIGNAL CIRCUIT SHORTED TO THE (K420) DEF TANK LEVEL SENSOR RETURN CIRCUIT**

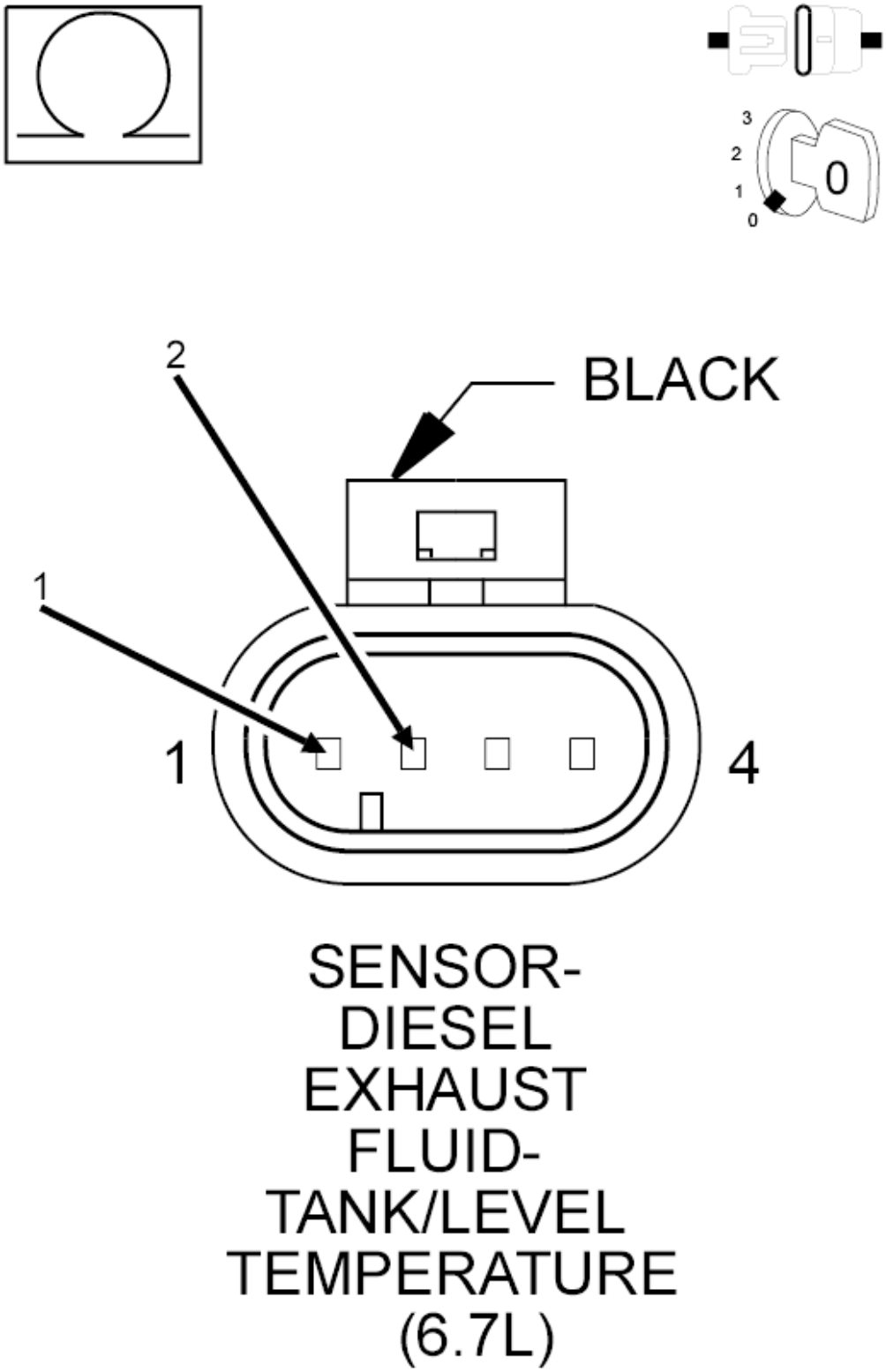

Fig. 39: Checking DEF Tank Level Sensor Signal Circuit For A Short
Courtesy of CHRYSLER GROUP, LLC

1. Measure the resistance between the (K414) DEF Tank Level Sensor Signal circuit and the (K420) DEF Tank Level Sensor Return circuit at the DEF Tank Level/Temperature harness connector.

   Is the resistance above 10k Ohms?

   Yes

   - Replace the DEF Dosing Control Unit in accordance with the service information. Refer to **UNIT, DIESEL EXHAUST FLUID DOSING CONTROL, REMOVAL** .
   - Perform the POWERTRAIN VERIFICATION TEST. Refer to **POWERTRAIN VERIFICATION TEST - 6.7L** .

   No

   - Repair the short between the (K414) DEF Tank Level Sensor Signal circuit and the (K420) DEF Tank Level Sensor Return circuit.
   - Perform the POWERTRAIN VERIFICATION TEST. Refer to **POWERTRAIN VERIFICATION TEST - 6.7L** .

P203D-(DIESEL EXHAUST FLUID) REDUCTANT LEVEL SENSOR CIRCUIT HIGH

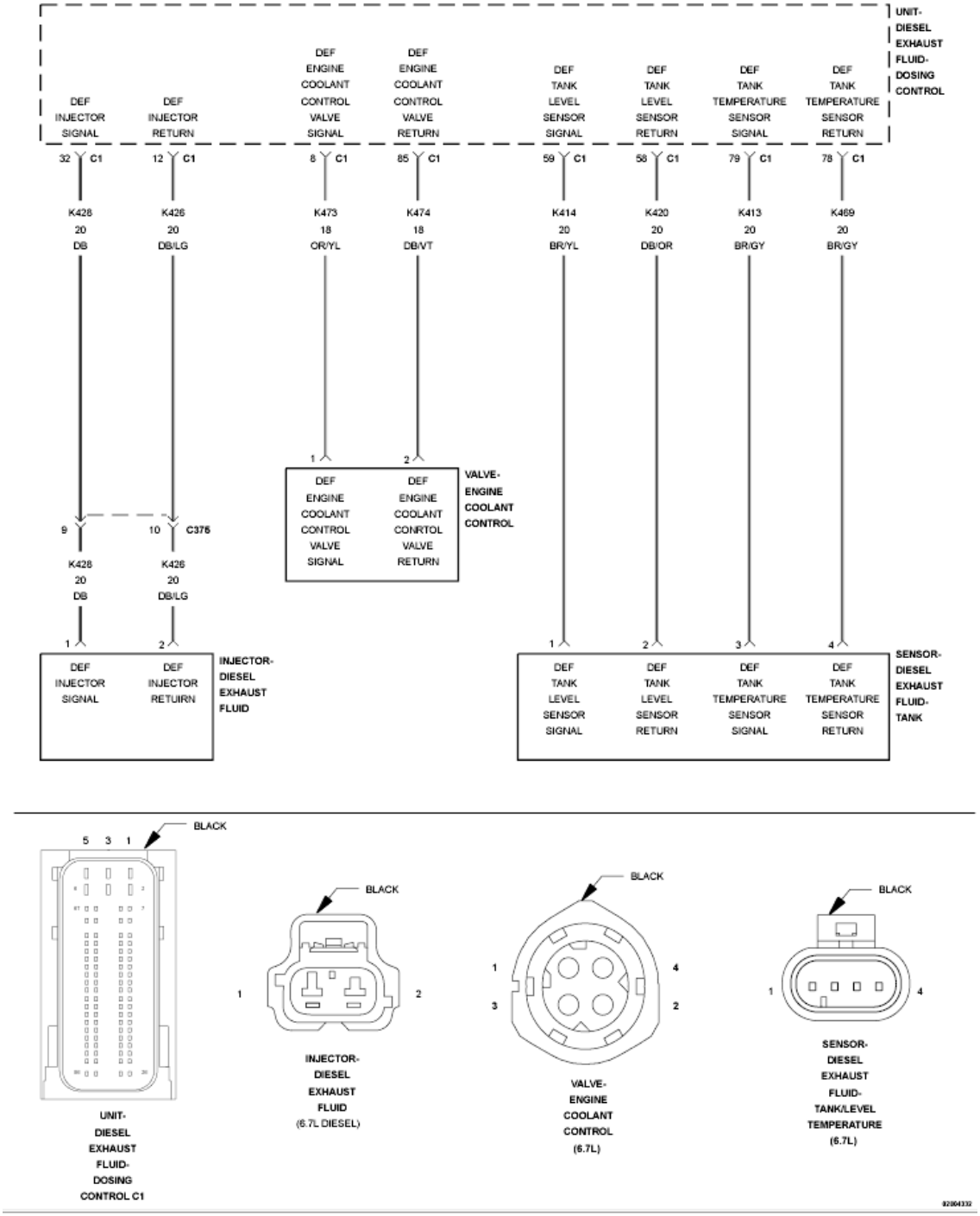

Fig. 40: Diesel Exhaust Fluid Reductant Tank Heater Control Circuit Wiring Diagram
Courtesy of CHRYSLER GROUP, LLC

For a complete wiring diagram, **refer to appropriate SYSTEM WIRING DIAGRAMS article** .

THEORY OF OPERATION

The Diesel Exhaust Fluid (DEF) Tank Level Sensor and Diesel Exhaust Fluid (DEF) Tank Temperature Sensor

are a combination sensor used to measure the level and temperature of the fluid inside the DEF Tank. Though combined, the level sensor and the temperature sensor operate independent of each other. Both sensors operate as a two wire 5-Volt sensor. The DEF Tank Level Sensor is a 14 point magnetic reed switch sensor. The DEF Tank Temperature Sensor is a negative temperature coefficient sensor. The DEF Dosing Control Unit will illuminate the MIL lamp immediately via the Powertrain Control Module (PCM) after this diagnostic runs and fails. The DEF Dosing Control Unit will turn off the MIL lamp via the PCM immediately after the diagnostic runs and passes. The DEF system will continue to dose and the NOx monitor will continue to execute while the DTC is active.

WHEN MONITORED:

With the ignition on.

SET CONDITION:

The DEF Dosing Control Unit detects that the (K414) DEF Tank Level Sensor Signal circuit is above 4.5 Volts for one second.

POSSIBLE CAUSES

Possible Causes
(K414) DIESEL EXHAUST FLUID TANK LEVEL SENSOR SIGNAL CIRCUIT SHORTED TO VOLTAGE
(K414) DIESEL EXHAUST FLUID TANK LEVEL SENSOR SIGNAL CIRCUIT OPEN/HIGH RESISTANCE
(K420) DIESEL EXHAUST FLUID TANK LEVEL SENSOR RETURN CIRCUIT OPEN/HIGH RESISTANCE
DIESEL EXHAUST FLUID TANK LEVEL SENSOR
DIESEL EXHAUST FLUID DOSING CONTROL UNIT

Always perform the Pre-Diagnostic Troubleshooting procedure before proceeding. Refer to PRE-DIAGNOSTIC TROUBLESHOOTING PROCEDURE - 6.7L .

DIAGNOSTIC TEST

1. **ACTIVE DTC**
    1. Turn the ignition on for one minute, engine not running.
    2. With the scan tool check for active DTCs.

    Is the DTC active?

    Yes

    - Go To 2.

    No

- Perform the INTERMITTENT CONDITION diagnostic procedure. Refer to **INTERMITTENT CONDITION - 6.7L** .

2. **CHECK THE (K414) DEF TANK LEVEL SENSOR SIGNAL CIRCUIT FOR A SHORT TO VOLTAGE**

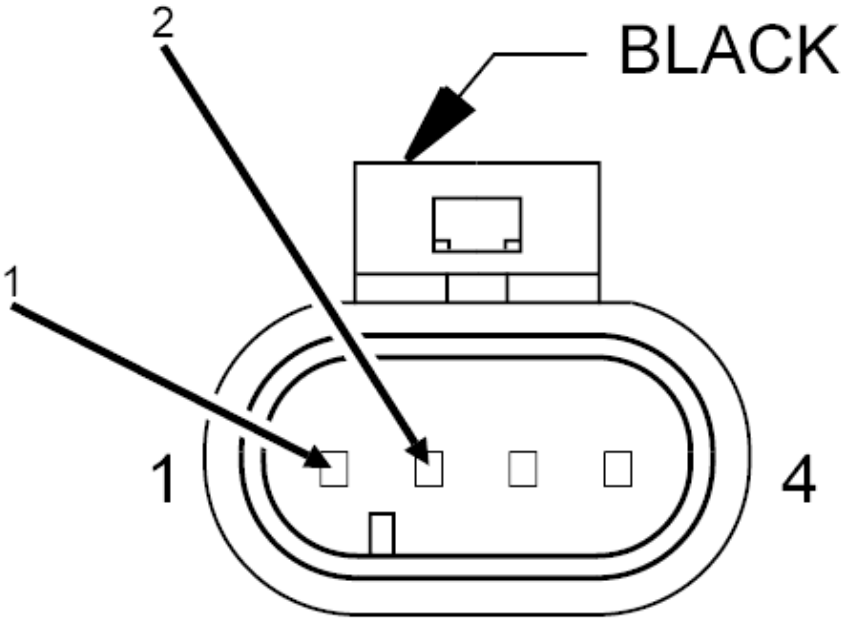

SENSOR-
DIESEL
EXHAUST
FLUID-
TANK/LEVEL
TEMPERATURE
(6.7L)

Fig. 41: Checking DEF Tank Level Sensor Signal Circuit For A Short To Voltage

1. Turn ignition off.
2. Disconnect the DEF Tank Level/Temperature Sensor harness connector.
3. Turn the ignition on.
4. Measure the voltage on the (K414) DEF Tank Level Sensor Signal circuit at the DEF Tank Level/Temperature Sensor harness connector.

   Does the voltage measure above 5.1 Volts?

   Yes

   - Repair the (K414) DEF Tank Level Sensor Signal circuit for a short to voltage.
   - Perform the POWERTRAIN VERIFICATION TEST. Refer to **POWERTRAIN VERIFICATION TEST - 6.7L** .

   No

   - Go To 3.

3. **FUEL LEVEL SENSOR**
   1. Turn the ignition off.
   2. Connect a jumper between the (K414) DEF Tank Level Sensor Signal circuit and the (K420) DEF Tank Level Sensor Return circuit at the DEF Tank Level/Temperature harness connector.
   3. Turn the ignition on, engine not running.
   4. With the scan tool check for DTCs.
   5. Monitor the scan tool for one minute.

      Did DTC P203C set as active after shorting the circuits together?

      Yes

      - Replace the DEF Tank Level/Temperature Sensor in accordance with the service information. Refer to **SENSOR, DIESEL EXHAUST FLUID LEVEL/TEMPERATURE, REMOVAL** .
      - Perform the POWERTRAIN VERIFICATION TEST. Refer to **POWERTRAIN VERIFICATION TEST - 6.7L** .

      No

      - Go To 4.

4. **CHECK THE (K414) DEF TANK LEVEL SENSOR SIGNAL CIRCUIT FOR AN OPEN/HIGH RESISTANCE**

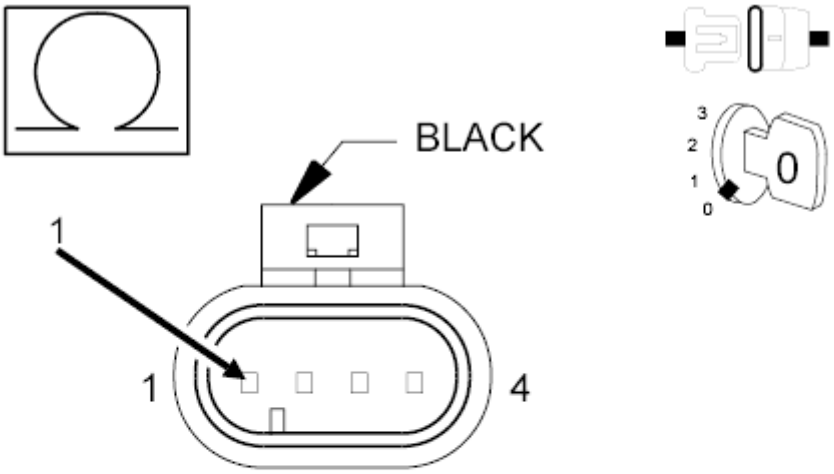

SENSOR-
DIESEL
EXHAUST
FLUID-
TANK/LEVEL
TEMPERATURE
(6.7L)

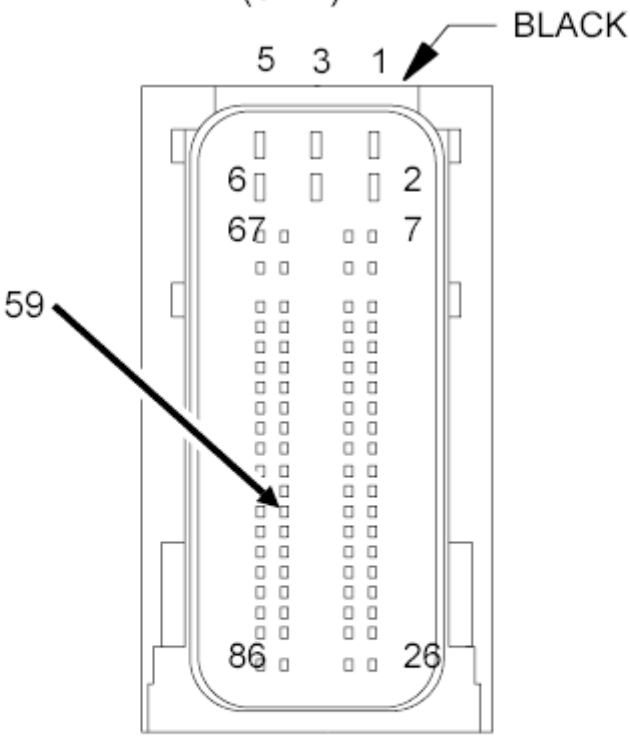

UNIT-
DIESEL
EXHAUST
FLUID-
DOSING

Fig. 42: Checking DEF Tank Level Sensor Signal Circuit For An Open/High Resistance
Courtesy of CHRYSLER GROUP, LLC

1. Turn ignition off.
2. Disconnect the DEF Dosing Control Unit C1 harness connector.
3. Measure the resistance of the (K414) DEF Tank Level Sensor Signal circuit between the DEF Tank Level/Temperature Sensor harness connector and the Diesel Exhaust Fluid Control Unit C1 harness connector.

   Is the resistance below 5.0 Ohms?

   Yes

   - Go To 5.

   No

   - Repair the (K414) DEF Tank Level Sensor Signal circuit for an open or high resistance.
   - Perform the POWERTRAIN VERIFICATION TEST. Refer to **POWERTRAIN VERIFICATION TEST - 6.7L** .

5. **CHECK THE (K420) DEF TANK LEVEL SENSOR RETURN CIRCUIT FOR AN OPEN/HIGH RESISTANCE**

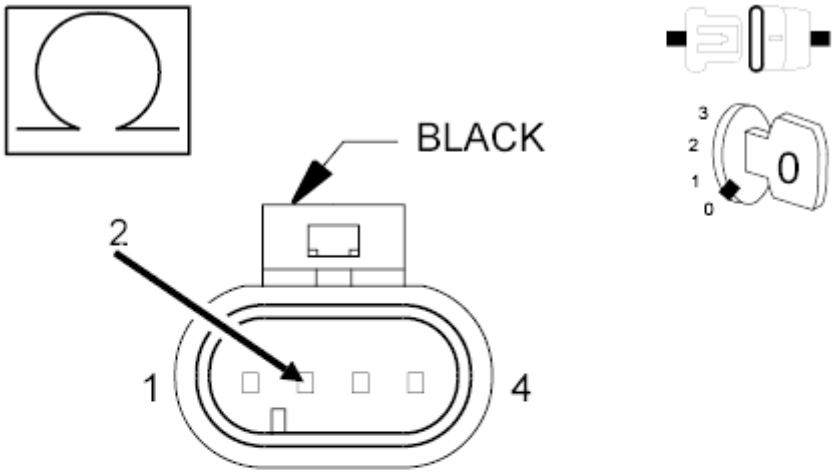

SENSOR-
DIESEL
EXHAUST
FLUID-
TANK/LEVEL
TEMPERATURE
(6.7L)

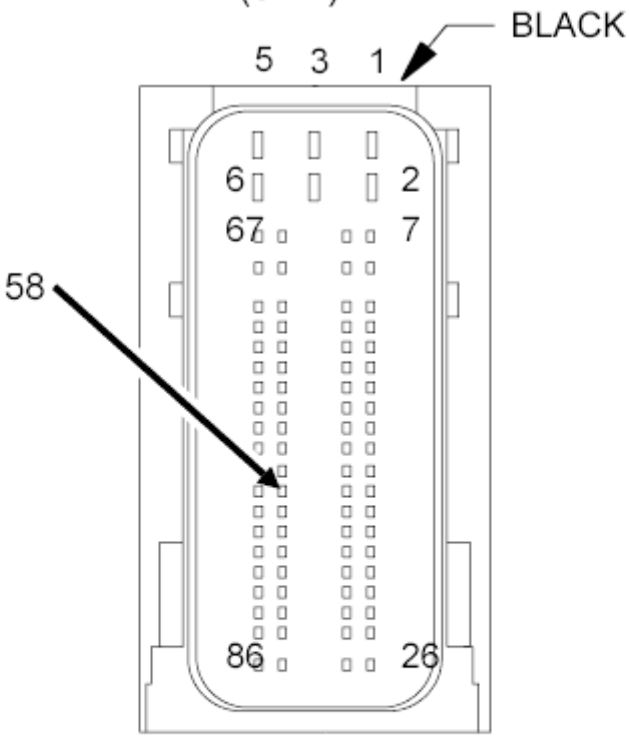

UNIT-
DIESEL
EXHAUST
FLUID-
DOSING

Fig. 43: Checking DEF Tank Level Sensor Return Circuit For An Open/High Resistance
Courtesy of CHRYSLER GROUP, LLC

1. Measure the resistance of the (K420) DEF Tank Level Sensor Return circuit between the DEF Tank Level/Temperature Sensor harness connector and the DEF Dosing Control Unit C1 harness connector.

   Is the resistance below 5.0 Ohms?

   Yes

   - Replace the DEF Dosing Control Unit in accordance with the service information. Refer to **UNIT, DIESEL EXHAUST FLUID DOSING CONTROL, REMOVAL** .
   - Perform the POWERTRAIN VERIFICATION TEST. Refer to **POWERTRAIN VERIFICATION TEST - 6.7L** .

   No

   - Repair the (K420) DEF Tank Level Sensor Return circuit for an open or high resistance.
   - Perform the POWERTRAIN VERIFICATION TEST. Refer to **POWERTRAIN VERIFICATION TEST - 6.7L** .

P203F-(DIESEL EXHAUST FLUID) REDUCTANT LEVEL TOO LOW

For a complete wiring diagram, **refer to appropriate SYSTEM WIRING DIAGRAMS article** .

THEORY OF OPERATION

The Diesel Exhaust Fluid (DEF) system holds a total of eight gallons of fluid. There are a series of three warning levels to indicate to the customer when the fluid is low or incorrect. The driver warning and inducement strategy for a low fluid condition is as follows: The first warning will occur when the tank level is at approximately three gallons. The customer will here a chime and get an EVIC message reading "LOW DEF REFILL SOON". The second warning level will occur when the tank level is at approximately two gallons. The customer will here a chime and get an EVIC message reading "REFILL DEF ENGINE WILL NOT RESTART IN XXX MILES". If the message is ignored until the tank is empty, the vehicle will not start. The customer will here a chime and get an EVIC message reading "REFILL DEF ENGINE WILL NOT START". The system will arrive at this level with approximately 0.7 gallon of fluid left in the tank. **The vehicle will not start until a minimum of two and a half gallons of approved Diesel Exhaust Fluid is added to the tank** .

WHEN MONITORED:

Continuously with the ignition on.

SET CONDITION:

The DEF Dosing Control Unit detects that the DEF Tank is low.

POSSIBLE CAUSES

Possible Causes
DIESEL EXHAUST FLUID TANK LOW

Always perform the Pre-Diagnostic Troubleshooting procedure before proceeding. Refer to PRE-DIAGNOSTIC TROUBLESHOOTING PROCEDURE - 6.7L .

DIAGNOSTIC TEST

1. **ACTIVE DTC**
    1. Turn the ignition on, engine not running.
    2. With the scan tool check for active DTCs.

    Is the DTC active?

    Yes

    - The DEF Tank is low. If the vehicle will not start due to the tank being empty, **a minimum of two and a half gallons of approved Diesel Exhaust Fluid** must be added for engine to be started.
    - Perform the POWERTRAIN VERIFICATION TEST. Refer to **POWERTRAIN VERIFICATION TEST - 6.7L** .

    No

    - Perform the INTERMITTENT CONDITION diagnostic procedure. Refer to **INTERMITTENT CONDITION - 6.7L** .

P2048-(DIESEL EXHAUST FLUID) REDUCTANT INJECTOR CIRCUIT LOW

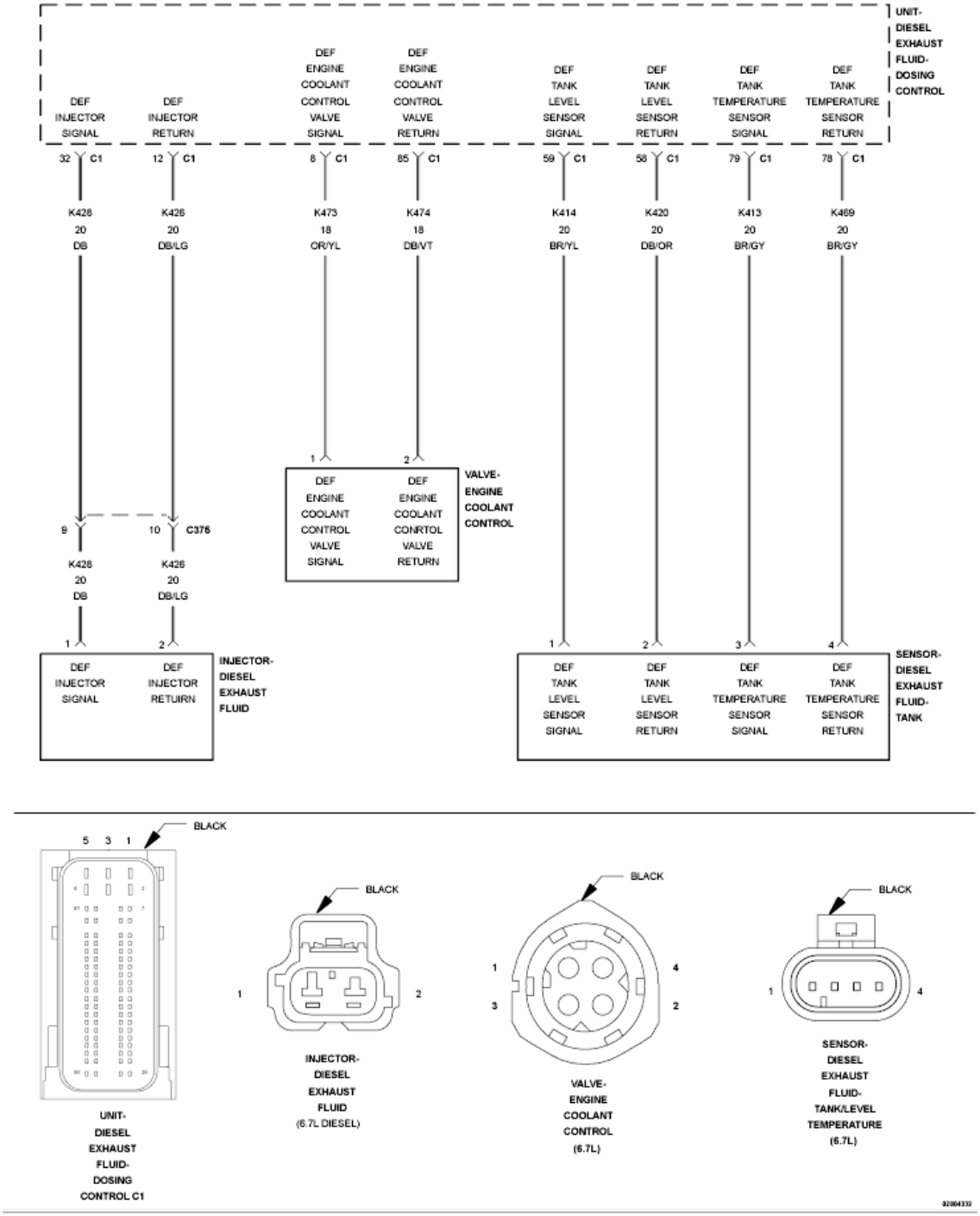

Fig. 44: Diesel Exhaust Fluid Reductant Tank Heater Control Circuit Wiring Diagram
Courtesy of CHRYSLER GROUP, LLC

For a complete wiring diagram, **refer to appropriate SYSTEM WIRING DIAGRAMS article** .

THEORY OF OPERATION

The Diesel Exhaust Fluid (DEF) Injector is mounted to the decomposition tube at the inlet of the Selective

Catalytic Reduction (SCR) Catalyst. The DEF Dosing Control Unit sends a Pulse Width Modulated (PWM) signal to DEF Injector to vary the amount of fluid sprayed into the exhaust stream. The DEF Dosing Control Unit will illuminate the MIL lamp via the Powertrain Control Module (PCM) immediately after this diagnostic runs and fails and diesel exhaust fluid injection into the aftertreatment system is disabled. The DEF Dosing Control Unit will turn off the MIL lamp via the PCM immediately after the diagnostic runs and passes for three consecutive key cycles.

WHEN MONITORED:

With the ignition on and the DEF Injector is commanded on.

SET CONDITION:

The DEF Dosing Control Unit that the DEF Injector control circuit voltage is below a calibrated value.

POSSIBLE CAUSES

Possible Causes
(K428) DIESEL EXHAUST FLUID INJECTOR SIGNAL CIRCUIT OPEN/HIGH RESISTANCE
(K426) DIESEL EXHAUST FLUID INJECTOR RETURN CIRCUIT OPEN/HIGH RESISTANCE
(K428) DIESEL EXHAUST FLUID INJECTOR SIGNAL CIRCUIT SHORTED TO GROUND
(K426) DIESEL EXHAUST FLUID INJECTOR RETURN CIRCUIT SHORTED TO GROUND
DIESEL EXHAUST FLUID INJECTOR
DIESEL EXHAUST FLUID DOSING CONTROL UNIT

Always perform the Pre-Diagnostic Troubleshooting procedure before proceeding. Refer to PRE-DIAGNOSTIC TROUBLESHOOTING PROCEDURE - 6.7L .

DIAGNOSTIC TEST

1. **ACTIVE DTC**
    1. Turn the ignition on for one minute, engine not running.
    2. With the scan tool, navigate to Systems Tests and actuate the Diesel Exhaust Fluid Doser Pump Override Test.
    3. With the scan tool, View DTCs.

    Is the DTC active?

    Yes

    - Go To 2.

    No

    - Perform the INTERMITTENT CONDITION diagnostic procedure. Refer to **INTERMITTENT CONDITION - 6.7L** .

2. **CHECK THE (K428) DEF INJECTOR SIGNAL CIRCUIT FOR AN OPEN/HIGH RESISTANCE**

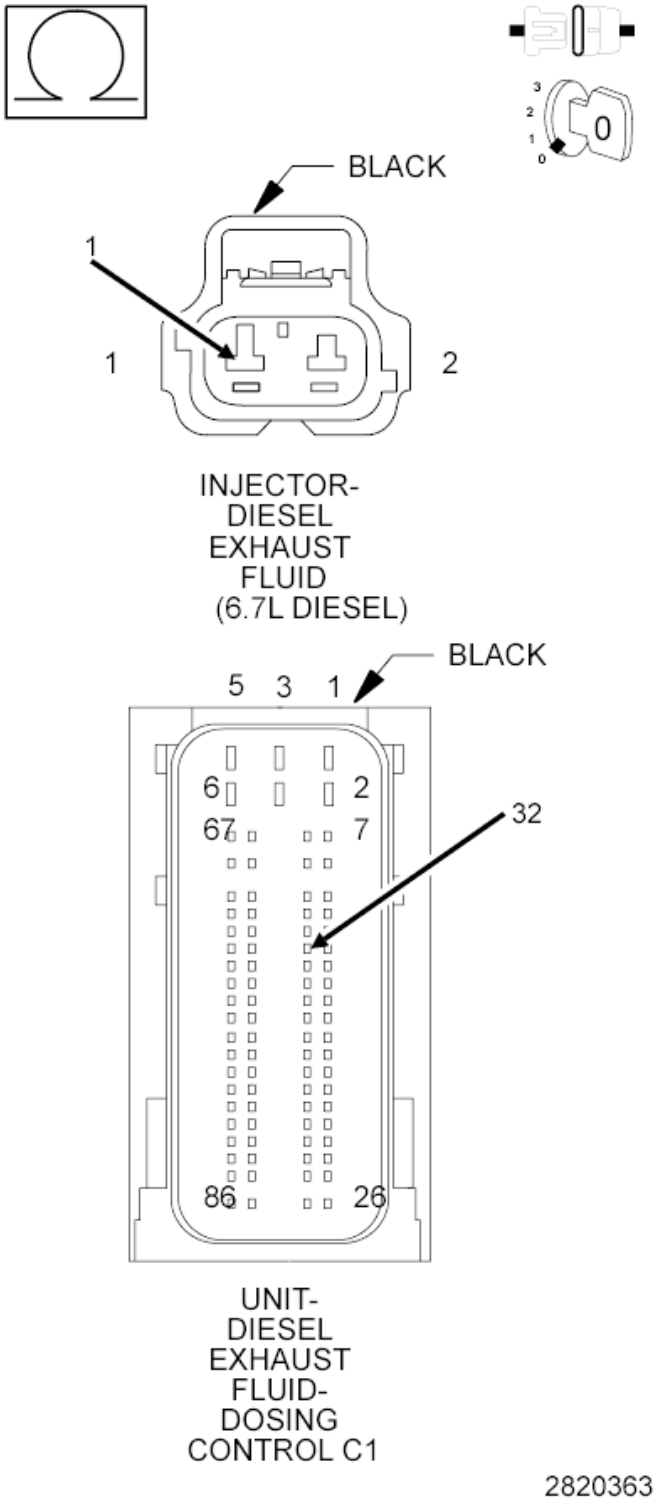

Fig. 45: Checking DEF Injector Signal Circuit For An Open/High Resistance
Courtesy of CHRYSLER GROUP, LLC

1. Stop actuation of the Diesel Exhaust Fluid Doser Pump Override Test.
2. Turn ignition off.
3. Disconnect the DEF Injector harness connector.
4. Disconnect the DEF Dosing Control Unit C1 harness connector.
5. Measure the resistance of the (K428) DEF Injector Signal circuit between the Diesel Exhaust Fluid Injector harness connector and the DEF Dosing Control Unit C1 harness connector.

   Is the resistance below 5.0 Ohms?

   Yes

   - Go To 3.

   No

   - Repair the (K428) DEF Injector Signal circuit for an open or high resistance.
   - Perform the POWERTRAIN VERIFICATION TEST. Refer to **POWERTRAIN VERIFICATION TEST - 6.7L** .

3. **CHECK THE (K426) DEF INJECTOR RETURN CIRCUIT FOR AN OPEN/HIGH RESISTANCE**

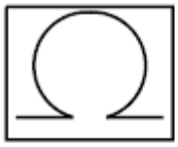

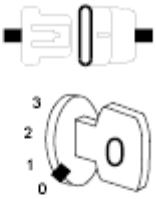

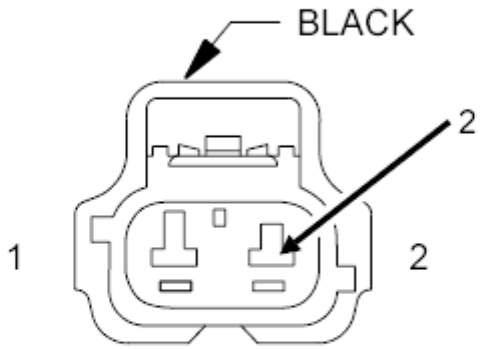

INJECTOR-
DIESEL
EXHAUST
FLUID
(6.7L DIESEL)

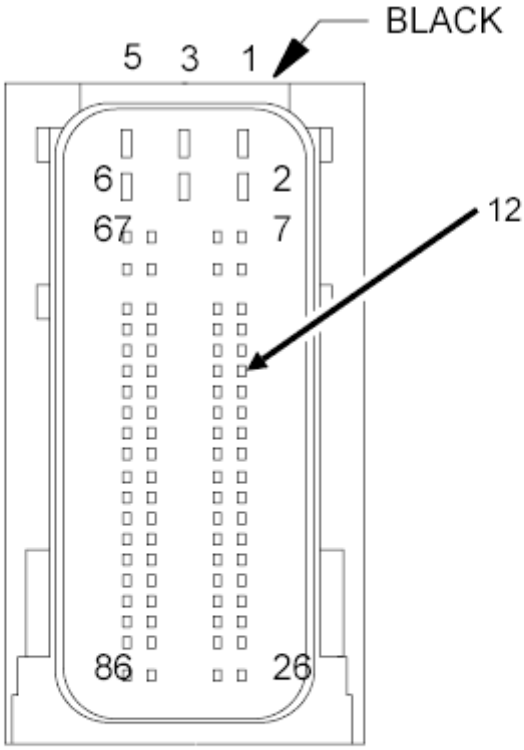

UNIT-
DIESEL
EXHAUST
FLUID-
DOSING

Fig. 46: Checking DEF Injector Return Circuit For An Open/High Resistance
Courtesy of CHRYSLER GROUP, LLC

1. Measure the resistance of the (K426) DEF Injector Return circuit between the Diesel Exhaust Fluid Injector harness connector and the DEF Dosing Control Unit C1 harness connector.

   Is the resistance below 5.0 Ohms?

   Yes

   - Go To 4.

   No

   - Repair the (K426) DEF Injector Return circuit for an open or high resistance.
   - Perform the POWERTRAIN VERIFICATION TEST. Refer to **POWERTRAIN VERIFICATION TEST - 6.7L** .

4. **CHECK THE (K428) DEF INJECTOR SIGNAL CIRCUIT FOR A SHORT TO GROUND**

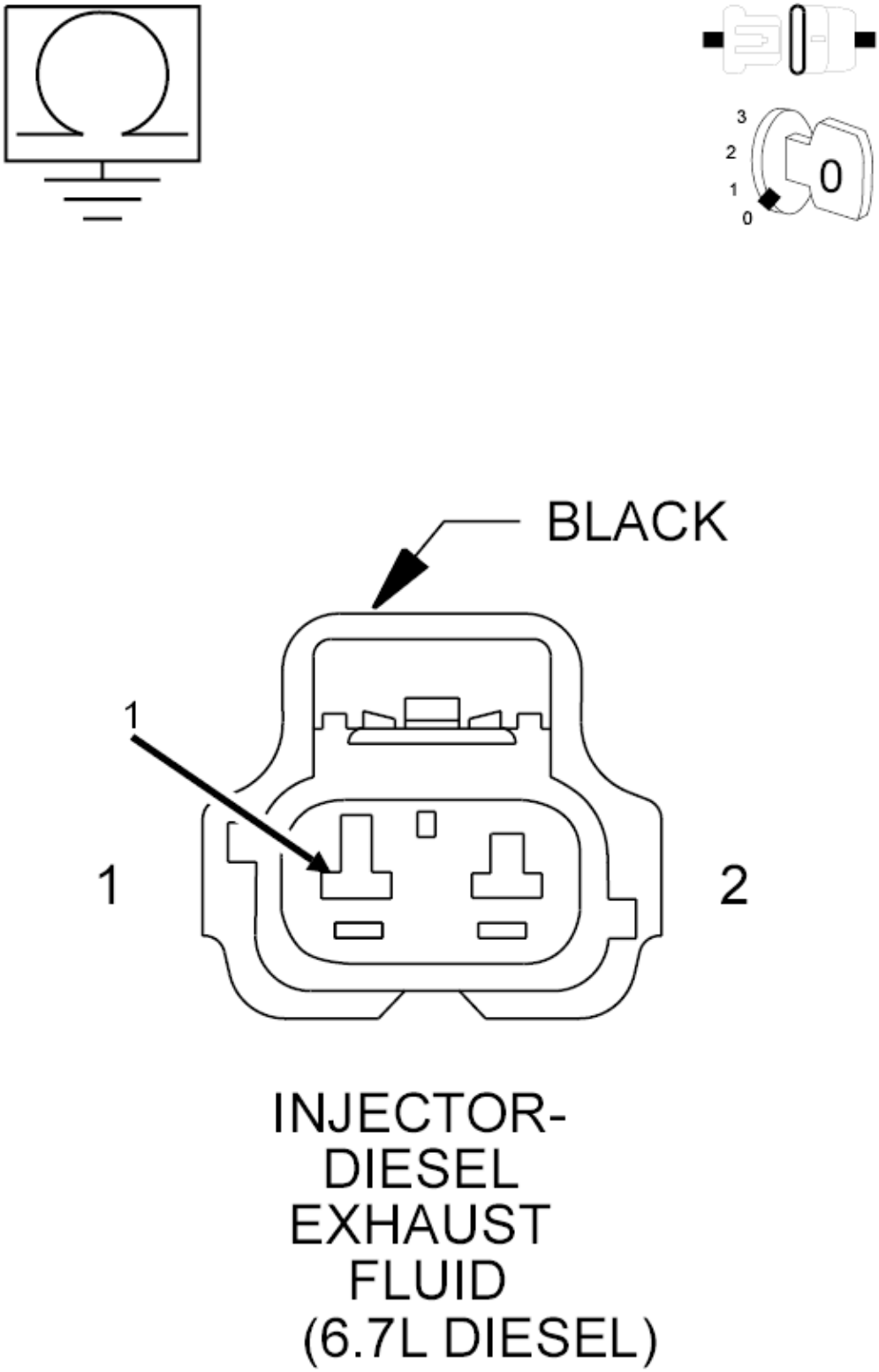

Fig. 47: Checking DEF Injector Signal Circuit For A Short To Ground
Courtesy of CHRYSLER GROUP, LLC

1. Measure the resistance between ground and the (K428) DEF Injector Signal circuit at the Diesel Exhaust Fluid Injector harness connector.

   Is the resistance above 10k Ohms?

   Yes

   - Go To 5.

   No

   - Repair the (K428) DEF Injector Signal circuit for a short to ground.
   - Perform the POWERTRAIN VERIFICATION TEST. Refer to **POWERTRAIN VERIFICATION TEST - 6.7L** .

5. **CHECK THE (K426) DEF INJECTOR RETURN CIRCUIT FOR A SHORT TO GROUND**

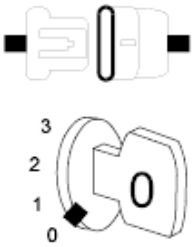

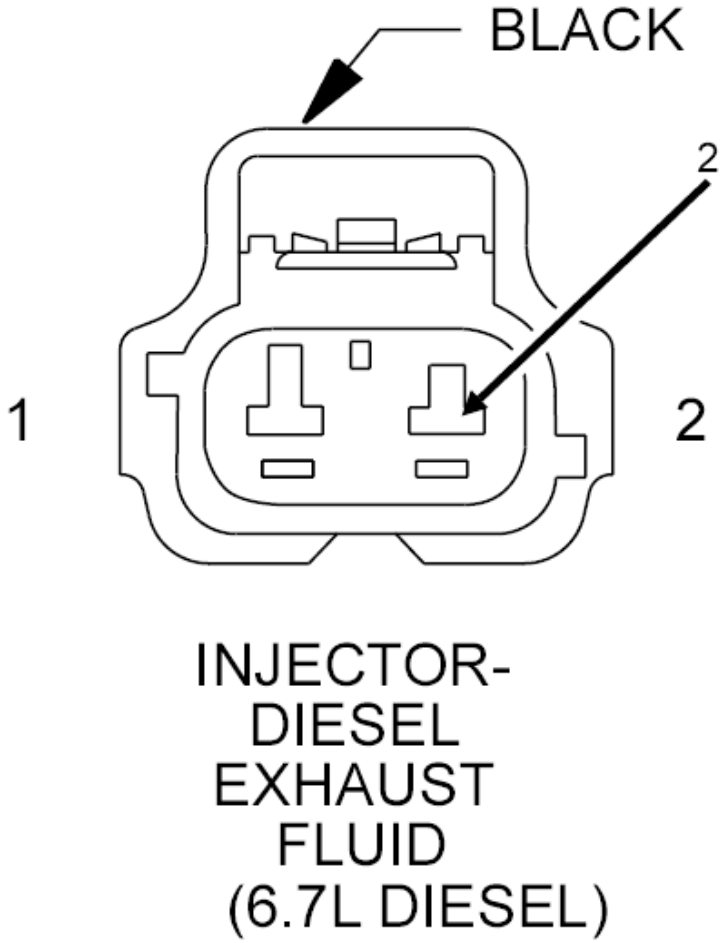

Fig. 48: Checking DEF Injector Return Circuit For A Short To Ground
Courtesy of CHRYSLER GROUP, LLC

1. Measure the resistance between ground and the (K426) DEF Injector Return circuit at the Diesel Exhaust Fluid Injector harness connector.

Is the resistance above 10k Ohms?

Yes

- Go To 6.

No

- Repair the (K426) DEF Injector Return circuit for a short to ground.
- Perform the POWERTRAIN VERIFICATION TEST. Refer to **POWERTRAIN VERIFICATION TEST - 6.7L** .

6. **CHECK THE DEF INJECTOR**
   1. Measure the resistance across the terminals of the DEF Injector.

NOTE: **The resistance through the DEF Injector should be between 11.0 Ohms and 13.0 Ohms.**

Does the resistance measure between 11.0 Ohms and 13.0 Ohms?

Yes

- Replace the DEF Dosing Control Unit in accordance with the Service Information. Refer to **UNIT, DIESEL EXHAUST FLUID DOSING CONTROL, REMOVAL** .
- Perform the POWERTRAIN VERIFICATION TEST. Refer to **POWERTRAIN VERIFICATION TEST - 6.7L** .

No

- Replace the DEF Injector in accordance with the Service Information. Refer to **INJECTOR, DIESEL EXHAUST FLUID, REMOVAL** .
- Perform the POWERTRAIN VERIFICATION TEST. Refer to **POWERTRAIN VERIFICATION TEST - 6.7L** .

P2049-(DIESEL EXHAUST FLUID) REDUCTANT INJECTOR CIRCUIT HIGH

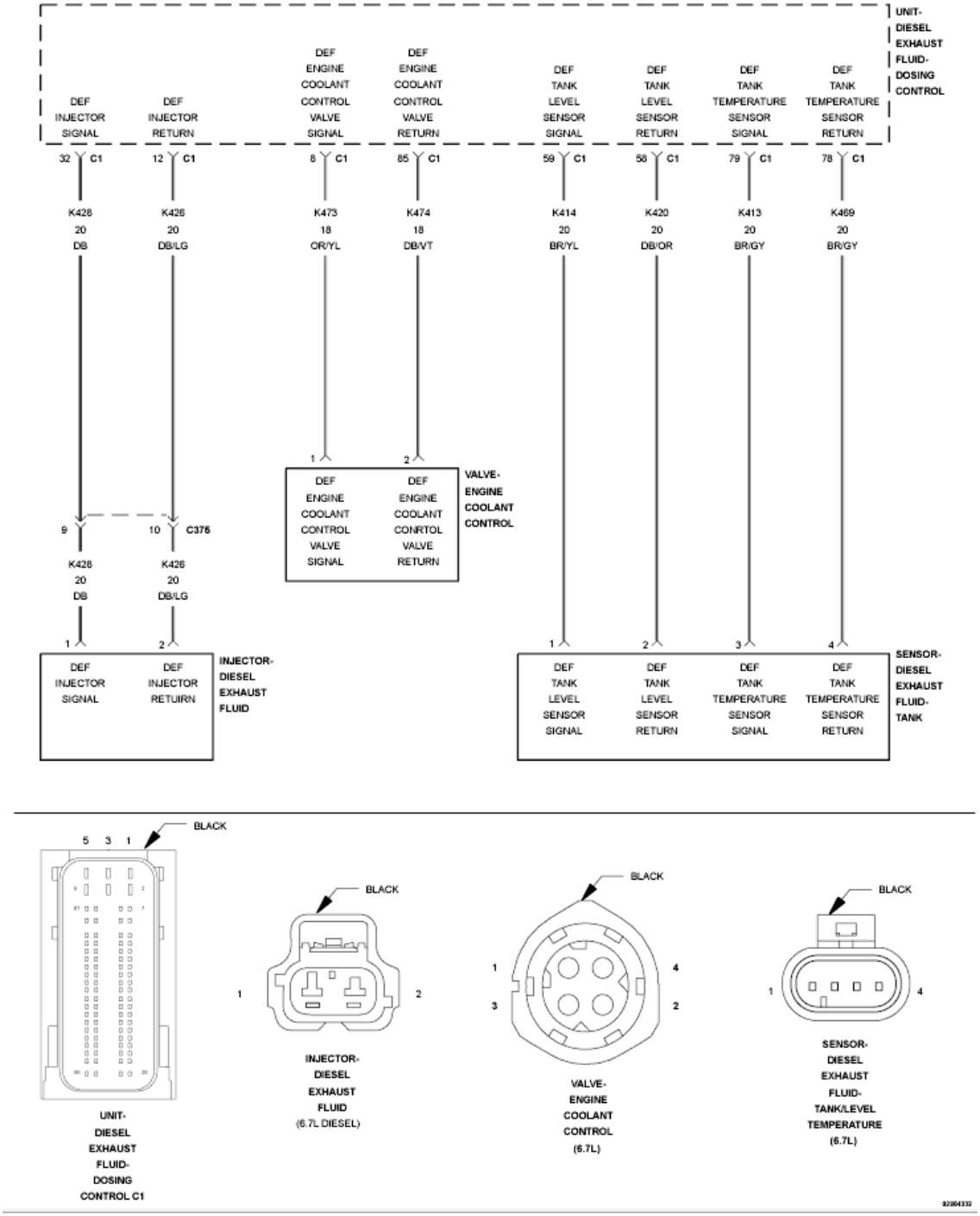

Fig. 49: Diesel Exhaust Fluid Reductant Tank Heater Control Circuit Wiring Diagram
Courtesy of CHRYSLER GROUP, LLC

For a complete wiring diagram, **refer to appropriate SYSTEM WIRING DIAGRAMS article** .

THEORY OF OPERATION

The Diesel Exhaust Fluid (DEF) Injector is mounted to the decomposition tube at the inlet of the Selective

Catalytic Reduction (SCR) Catalyst. The DEF Dosing Control Unit sends a Pulse Width Modulated (PWM) signal to DEF Injector to vary the amount of fluid sprayed into the exhaust stream. The DEF Dosing Control Unit will illuminate the MIL lamp via the Powertrain Control Module (PCM) immediately after this diagnostic runs and fails and diesel exhaust fluid injection into the aftertreatment system is disabled. The DEF Dosing Control Unit will turn off the MIL lamp via the PCM immediately after the diagnostic runs and passes for three consecutive key cycles.

WHEN MONITORED:

With the ignition on and the DEF Injector is commanded on.

SET CONDITION:

The DEF Dosing Control Unit that the DEF Injector control circuit voltage is above a calibrated value.

POSSIBLE CAUSES

Possible Causes
(K428) DIESEL EXHAUST FLUID INJECTOR SIGNAL CIRCUIT SHORTED TO VOLTAGE
(K426) DIESEL EXHAUST FLUID INJECTOR RETURN CIRCUIT SHORTED TO VOLTAGE
DEF INJECTOR
DIESEL EXHAUST FLUID DOSING CONTROL UNIT

Always perform the Pre-Diagnostic Troubleshooting procedure before proceeding. Refer to PRE-DIAGNOSTIC TROUBLESHOOTING PROCEDURE - 6.7L .

DIAGNOSTIC TEST

1. **ACTIVE DTC**
    1. Turn the ignition on, engine not running.
    2. With the scan tool, View DTCs.

       Is the DTC active?

       Yes

       - Go To 3.

       No

       - Perform the INTERMITTENT CONDITION diagnostic procedure. Refer to **INTERMITTENT CONDITION - 6.7L** .
2. **DEF INJECTOR**
    1. With the scan tool, Erase DTCs.
    2. Turn ignition off.

3. Disconnect the DEF Injector harness connector.
4. Turn the ignition on.
5. With the scan tool, navigate to Systems Tests actuate of the Diesel Exhaust Fluid Doser Pump Override Test.
6. With the scan tool, View DTCs.

   Does DTC P2048 become active and P2049 stored with the DEF Injector harness connector disconnected?

   Yes

   - Replace the DEF Injector in accordance with the Service Information. Refer to **INJECTOR, DIESEL EXHAUST FLUID, REMOVAL** .
   - Perform the POWERTRAIN VERIFICATION TEST. Refer to **POWERTRAIN VERIFICATION TEST - 6.7L** .

   No

   - Go To 3.

3. **CHECK FOR THE (K428) DEF INJECTOR SIGNAL CIRCUIT SHORTED TO ANOTHER CIRCUIT**

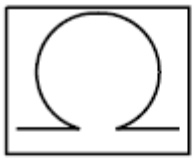

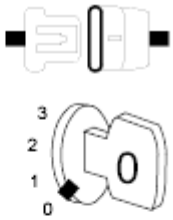

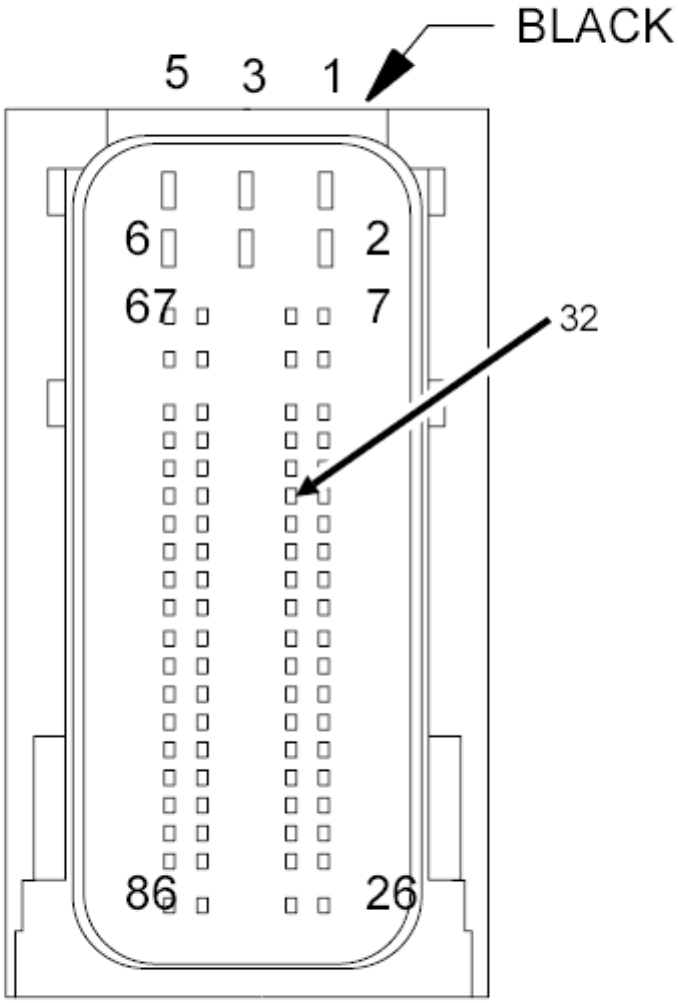

UNIT-
DIESEL
EXHAUST
FLUID-
DOSING
CONTROL C1

Fig. 50: Checking DEF Injector Signal Circuit For A Short
Courtesy of CHRYSLER GROUP, LLC

1. Turn ignition off.
2. Disconnect the DEF Dosing Control Unit C1 harness connector.
3. Measure the resistance between the (K428) DEF Injector Signal circuit and all other circuits at the DEF Dosing Control Unit C1 harness connector.

   Is the resistance above 10k Ohms between the (K428) DEF Injector Signal circuit and all other circuits?

   Yes

   - Go To 4.

   No

   - Repair the short between the (K428) DEF Injector Signal circuit and the circuit that measured below 10k Ohms.
   - Perform the POWERTRAIN VERIFICATION TEST. Refer to **POWERTRAIN VERIFICATION TEST - 6.7L** .

4. **CHECK FOR THE (K426) DEF INJECTOR RETURN CIRCUIT SHORTED TO ANOTHER CIRCUIT**

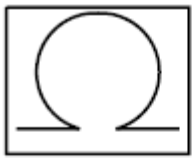

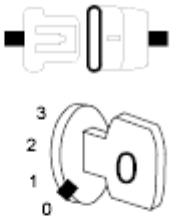

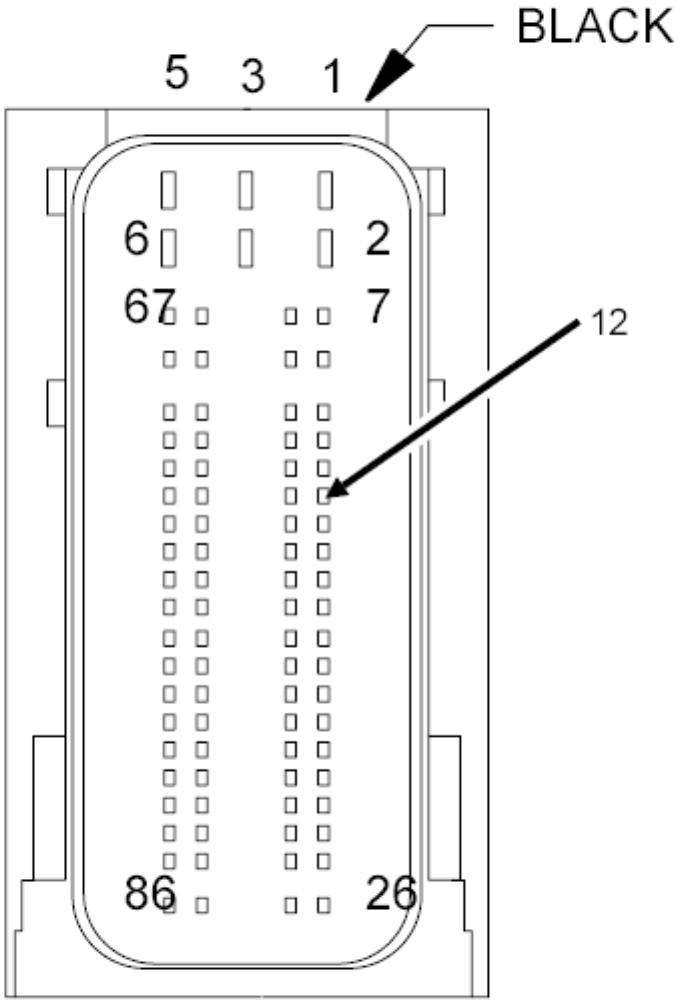

UNIT-
DIESEL
EXHAUST
FLUID-
DOSING
CONTROL C1

Fig. 51: Checking DEF Injector Return Circuit For Short To Another Circuit
Courtesy of CHRYSLER GROUP, LLC

1. Measure the resistance between the (K426) DEF Injector Return circuit and all other circuits at the DEF Dosing Control Unit C1 harness connector.

   Is the resistance above 10k Ohms between the (K426) DEF Injector Return circuit and all other circuits?

   Yes

   - Replace the DEF Dosing Control Unit in accordance with the Service Information. Refer to **UNIT, DIESEL EXHAUST FLUID DOSING CONTROL, REMOVAL** .
   - Perform the POWERTRAIN VERIFICATION TEST. Refer to **POWERTRAIN VERIFICATION TEST - 6.7L** .

   No

   - Repair the short between the (K428) DEF Injector Return circuit and the circuit that measured below 10k Ohms.
   - Perform the POWERTRAIN VERIFICATION TEST. Refer to **POWERTRAIN VERIFICATION TEST - 6.7L** .

P204A-(DIESEL EXHAUST FLUID) REDUCTANT PRESSURE SENSOR CIRCUIT

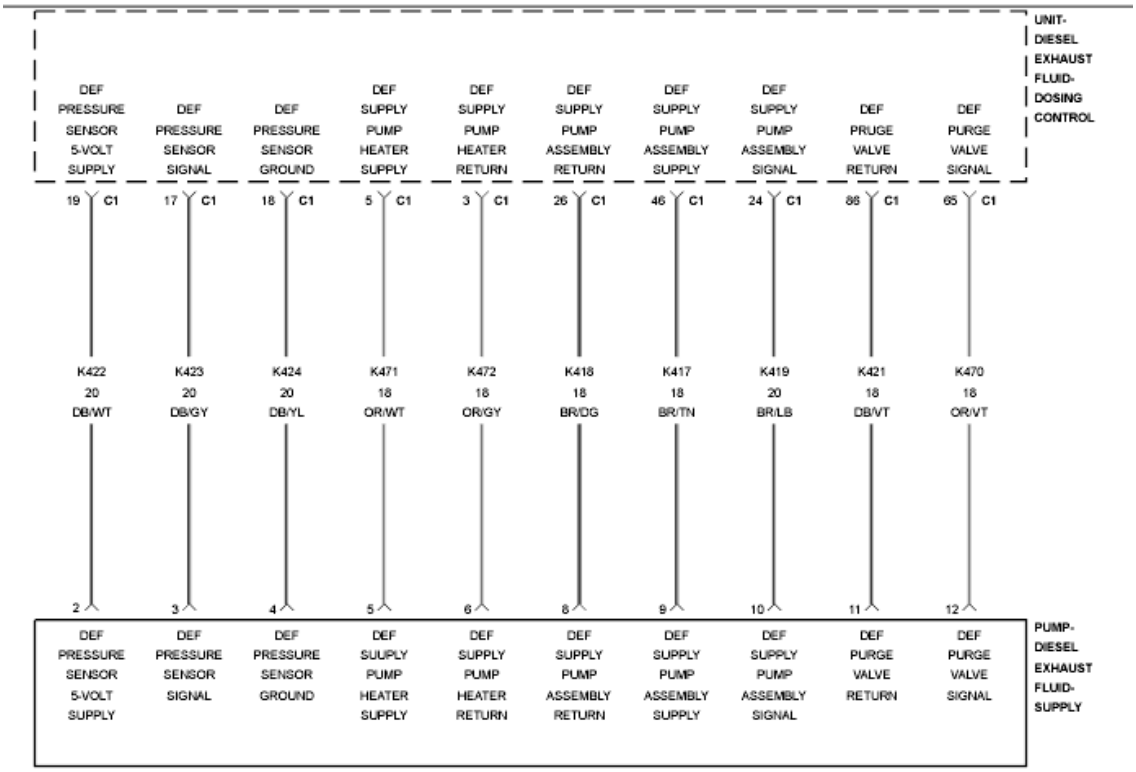

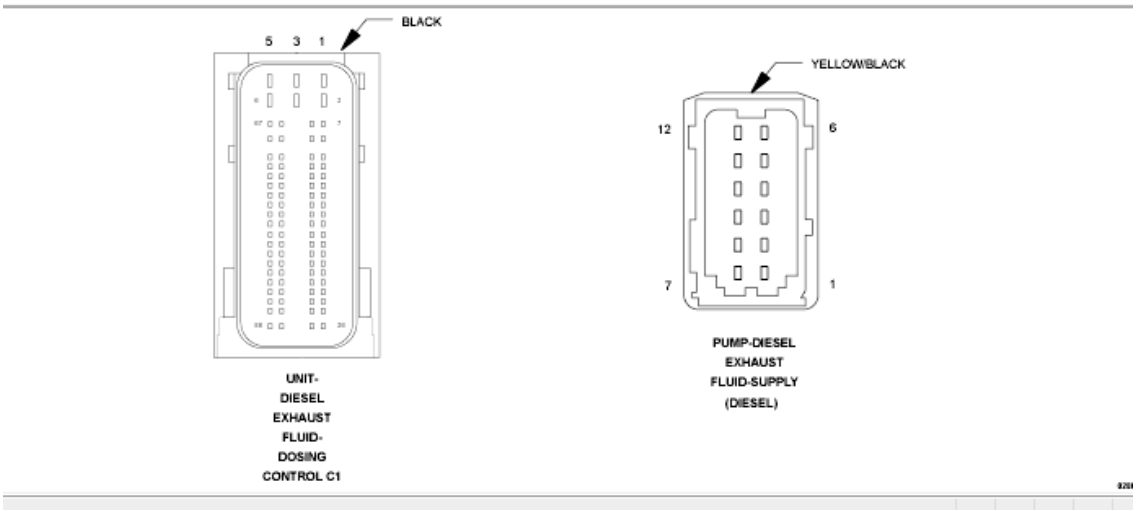

Fig. 52: Diesel Exhaust Fluid (DEF) Dosing Control Unit Wiring Diagram
Courtesy of CHRYSLER GROUP, LLC

For a complete wiring diagram, **refer to appropriate SYSTEM WIRING DIAGRAMS article** .

THEORY OF OPERATION

The Diesel Exhaust Fluid (DEF) Pressure Sensor is a three wire sensor, integrated into the DEF Supply Pump and is not serviceable separate from the pump. The DEF Pressure Sensor monitors supply pressure to the DEF Injector. The Diesel Exhaust Fluid (DEF) Dosing Control Unit provides a 5-Volt Supply and a ground to the DEF Pressure Sensor. The sensor provides a signal to the DEF Dosing Control Unit on the DEF Pressure Sensor Signal circuit. This DEF Pressure Sensor Signal voltage changes, based on the diesel exhaust fluid pressure supplied by the DEF Supply Pump. The DEF Dosing Control Unit uses this information to vary pump speed and maintain the 130 psi (9 bar) pressure needed for proper DEF injection. The DEF Dosing Control Unit will detect a low signal voltage at low diesel exhaust fluid pressures, and a high signal voltage at high diesel exhaust fluid pressures. The DEF Dosing Control Module will illuminate the MIL light via the Powertrain Control Module (PCM) immediately after the diagnostics runs and fails. Diesel exhaust fluid injection into the aftertreatment system is disabled. The DEF Dosing Control Module will turn off the MIL light via the PCM when the monitor runs and passes in three consecutive key cycles.

WHEN MONITORED:

Continuously with the ignition on.

SET CONDITION:

The DEF Dosing Control Unit detects an implausible signal from the DEF Pressure Sensor.

POSSIBLE CAUSES

Possible Causes
(K422) DEF PRESSURE SENSOR SUPPLY CIRCUIT SHORTED TO VOLTAGE
DIESEL EXHAUST FLUID SUPPLY PUMP
DIESEL EXHAUST FLUID DOSING CONTROL UNIT

Always perform the Pre-Diagnostic Troubleshooting procedure before proceeding. Refer to PRE-DIAGNOSTIC TROUBLESHOOTING PROCEDURE - 6.7L .

DIAGNOSTIC TEST

1. **ACTIVE DTC**
    1. Ignition on, engine not running.
    2. With the scan tool check for active DTCs.

    Is the DTC active?

    Yes

    - Go To 2.

    No

- Perform the INTERMITTENT CONDITION diagnostic procedure. Refer to **INTERMITTENT CONDITION - 6.7L** .

2. **CHECK THE DEF PRESSURE SENSOR**
   1. Turn the ignition off.
   2. Disconnect the DEF Supply Pump harness connector.
   3. Turn the ignition on, engine not running.
   4. With the scan tool, View DTCs.

   NOTE: **Other DTCs will also set from unplugging the DEF Pump Assembly. Ignore any DTCs that do not pertain to the DEF Pressure Sensor.**

   Did DTC P204D set as active after unplugging the connector?

   Yes

   - Replace the DEF Supply Pump Assembly in accordance with the service information. Refer to **ASSEMBLY, DIESEL EXHAUST FLUID PUMP, REMOVAL** .
   - Perform the POWERTRAIN VERIFICATION TEST. Refer to **POWERTRAIN VERIFICATION TEST - 6.7L** .

   No

   - Go To 3.

3. **CHECK FOR THE (K422) DEF PRESSURE SENSOR SUPPLY CIRCUIT SHORTED TO ANOTHER CIRCUIT**

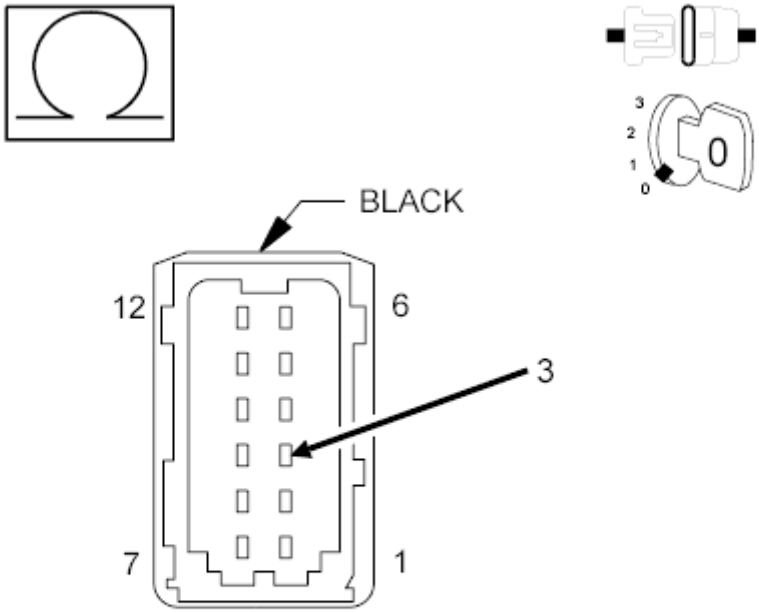

PUMP-DIESEL
EXHAUST
FLUID-SUPPLY
(DIESEL)

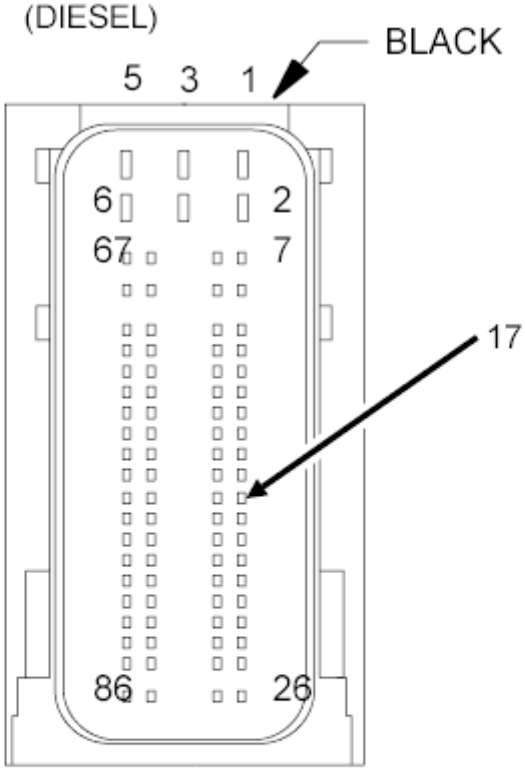

UNIT-
DIESEL
EXHAUST
FLUID-
DOSING

Fig. 53: Checking DEF Pressure Sensor Supply Circuit For A Short To Another Circuit
Courtesy of CHRYSLER GROUP, LLC

1. Turn ignition off.
2. Disconnect the DEF Dosing Control Unit C1 harness connector.
3. Measure the resistance between the (K422) DEF Pressure Sensor Supply circuit and all other circuits at the DEF Dosing Control Unit C1 harness connector.

   Is the resistance above 10k Ohms between the (K422) DEF Pressure Sensor Supply circuit and all other circuits?

   Yes

   - Replace the DEF Dosing Control Unit in accordance with the service information. Refer to **UNIT, DIESEL EXHAUST FLUID DOSING CONTROL, REMOVAL** .
   - Perform the POWERTRAIN VERIFICATION TEST. Refer to **POWERTRAIN VERIFICATION TEST - 6.7L** .

   No

   - Repair the (K422) DEF Pressure Sensor Supply circuit for a short to the circuit that measured below 10k Ohms.
   - Perform the POWERTRAIN VERIFICATION TEST. Refer to **POWERTRAIN VERIFICATION TEST - 6.7L** .

P204B-(DIESEL EXHAUST FLUID) REDUCTANT PRESSURE SENSOR CIRCUIT PERFORMANCE

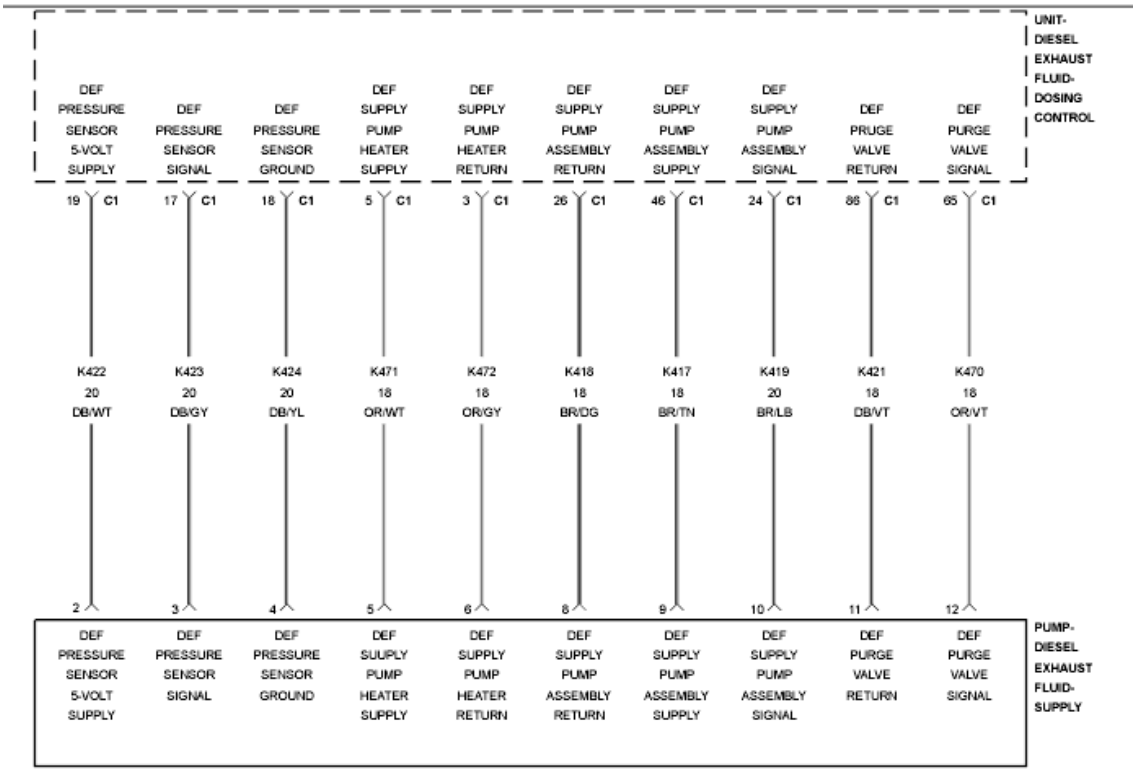

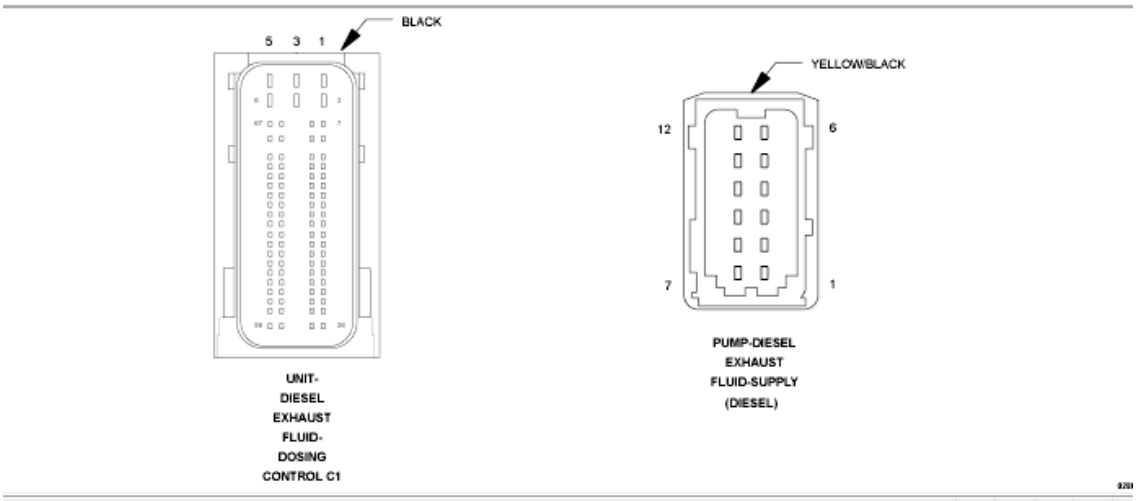

Fig. 54: Diesel Exhaust Fluid (DEF) Dosing Control Unit Wiring Diagram
Courtesy of CHRYSLER GROUP, LLC

For a complete wiring diagram, **refer to appropriate SYSTEM WIRING DIAGRAMS article** .

THEORY OF OPERATION

The Diesel Exhaust Fluid (DEF) Pressure Sensor is a three wire sensor, integrated into the DEF Supply Pump and is not serviceable separate from the pump. The DEF Pressure Sensor monitors supply pressure to the DEF Injector. The Diesel Exhaust Fluid (DEF) Dosing Control Unit provides a 5-Volt Supply and a ground to the DEF Pressure Sensor. The sensor provides a signal to the DEF Dosing Control Unit on the DEF Pressure Sensor Signal circuit. This DEF Pressure Sensor Signal voltage changes, based on the diesel exhaust fluid pressure supplied by the DEF Supply Pump. The DEF Dosing Control Unit uses this information to vary pump speed and maintain the 130 psi (9 bar) pressure needed for proper DEF injection. The DEF Dosing Control Unit will detect a low signal voltage at low diesel exhaust fluid pressures, and a high signal voltage at high diesel exhaust fluid pressures. The DEF Dosing Control Module will illuminate the MIL light via the Powertrain Control Module (PCM) immediately after the diagnostics runs and fails. The DEF Dosing Control Module will turn off the MIL light via the PCM when the monitor runs and passes in three consecutive key cycles.

WHEN MONITORED:

When the DEF Injector is in the priming or dosing state.

SET CONDITION:

The DEF Dosing Control Unit detects that the DEF system is not able to build or maintain adequate line pressure.

POSSIBLE CAUSES

Possible Causes
LOW DIESEL EXHAUST FLUID TANK LEVEL
CONTAMINATED DIESEL EXHAUST FLUID
BLOCKED OR RESTRICTED DIESEL EXHAUST FLUID TANK FILTER
BLOCKED OR RESTRICTED DIESEL EXHAUST FLUID SUPPLY PUMP FILTER
BLOCKED, RESTRICTED OR FROZEN DIESEL EXHAUST FLUID SUPPLY PUMP FITTING OR DEF SUPPLY LINE
LEAKING DEF SUPPLY LINE OR DEF PRESSURE LINE
DIESEL EXHAUST FLUID SUPPLY PUMP

Always perform the Pre-Diagnostic Troubleshooting procedure before proceeding. Refer to PRE-DIAGNOSTIC TROUBLESHOOTING PROCEDURE - 6.7L .

DIAGNOSTIC TEST

1. **CHECK THE DEF TANK LEVEL AND FLUID**
    1. Verify the DEF Tank level.
    2. Check the fluid for signs of contamination.

    Is the fluid level in the DEF Tank above the minimum requirement and free of contamination?

Yes

- Go To 2.

No

- Fill the DEF Tank to the proper level with clean Diesel Exhaust Fluid. If the fluid is contaminated, follow the cleaning procedure. Refer to **TANK, DIESEL EXHAUST FLUID, CLEANING** .
- Perform the POWERTRAIN VERIFICATION TEST. Refer to **POWERTRAIN VERIFICATION TEST - 6.7L** .

2. **ACTIVE DTC**

NOTE: Perform the diagnostics for any other DEF system DTCs that are present with this fault before continuing.

1. Turn the ignition on for one minute, engine not running.
2. With the scan tool, navigate to Systems Tests and actuate the Diesel Exhaust Fluid Doser Pump Override Test.
3. With the scan tool, View DTCs.

Is the DTC active?

Yes

- Go To 3.

No

- Perform the INTERMITTENT CONDITION diagnostic procedure. Refer to **INTERMITTENT CONDITION - 6.7L** .

3. **CHECK FOR LEAKING DEF SUPPLY LINE OR DEF PRESSURE LINE**

1. Turn the ignition off.
2. Visually inspect the DEF Supply and DEF Pressure Lines and fittings for signs of a fluid leak.

Was a leak found in the DEF system?

Yes

- Repair or replace the DEF Lines in accordance with the service information.
- Perform the POWERTRAIN VERIFICATION TEST. Refer to **POWERTRAIN VERIFICATION TEST - 6.7L** .

No

- Go To 4.

4. **CHECK THE DEF SUPPLY PUMP INLET FITTING AND DEF SUPPLY LINE**
    1. Remove the DEF Supply Line.
    2. Inspect the DEF Supply Pump fitting for blockage or debris.
    3. Using regulated low pressure shop air, check the DEF Supply Line for a restriction. Blow the air in the opposite direction of the fluid flow.

    Were any restrictions found?

    Yes

    - Perform the appropriate repair.
    - Perform the POWERTRAIN VERIFICATION TEST. Refer to **POWERTRAIN VERIFICATION TEST - 6.7L** .

    No

    - Go To 5.

5. **CHECK THE DEF SUPPLY PUMP FILTER**
    1. Reinstall the DEF Supply Line.
    2. Remove and inspect the DEF Supply Pump Filter.

    Is the DEF Supply Pump Filter blocked or restricted?

    Yes

    - Replace the DEF Supply Pump Filter in accordance with the service information.
    - Perform the POWERTRAIN VERIFICATION TEST. Refer to **POWERTRAIN VERIFICATION TEST - 6.7L** .

    No

    - Go To 6.

6. **CHECK THE DEF TANK FILTER**
    1. Reinstall the DEF Supply Pump Filter.
    2. Remove the DEF Tank Level/Temperature Sensor Assembly and inspect the DEF Tank Filter.

    Is the DEF Tank Filter blocked or restricted?

    Yes

    - Replace the DEF Tank Level/Temperature Sensor Assembly in accordance with the service information. Refer to **SENSOR, DIESEL EXHAUST FLUID LEVEL/TEMPERATURE, REMOVAL** .

- Perform the POWERTRAIN VERIFICATION TEST. Refer to **POWERTRAIN VERIFICATION TEST - 6.7L** .

No

- Replace the DEF Supply Pump Assembly in accordance with the service information. Refer to **ASSEMBLY, DIESEL EXHAUST FLUID PUMP, REMOVAL** .
- Perform the POWERTRAIN VERIFICATION TEST. Refer to **POWERTRAIN VERIFICATION TEST - 6.7L** .

P204C-(DIESEL EXHAUST FLUID) REDUCTANT PRESSURE SENSOR CIRCUIT LOW

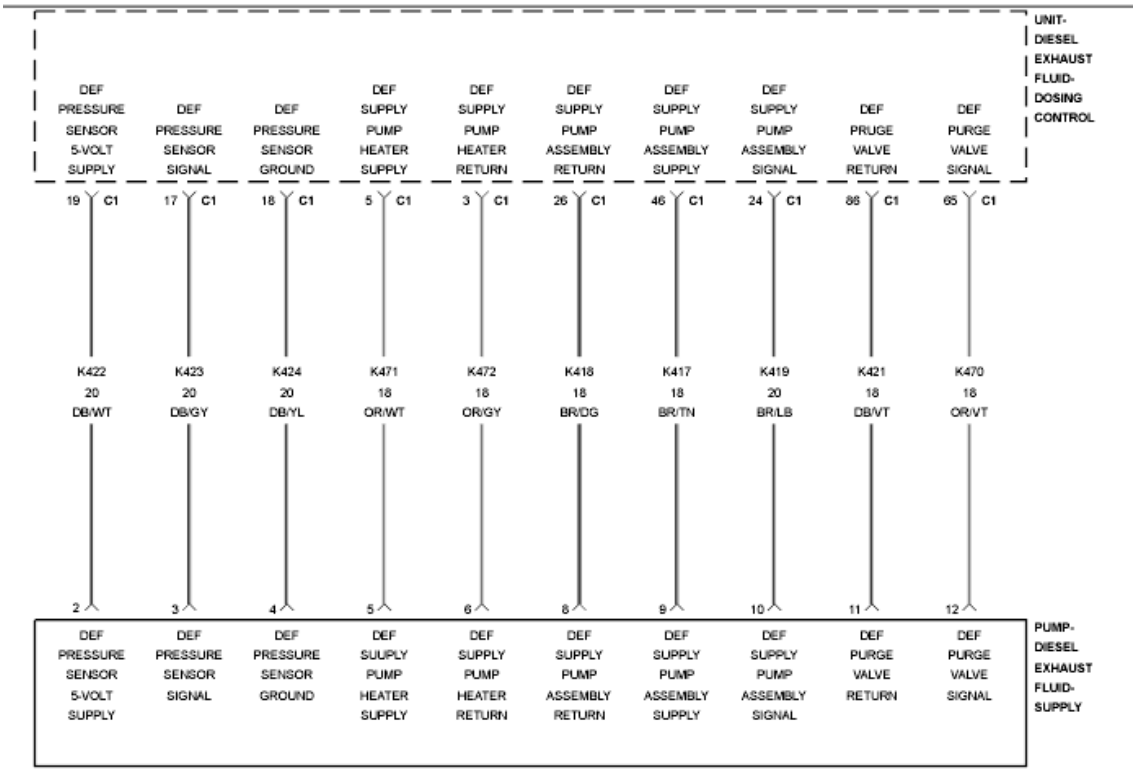

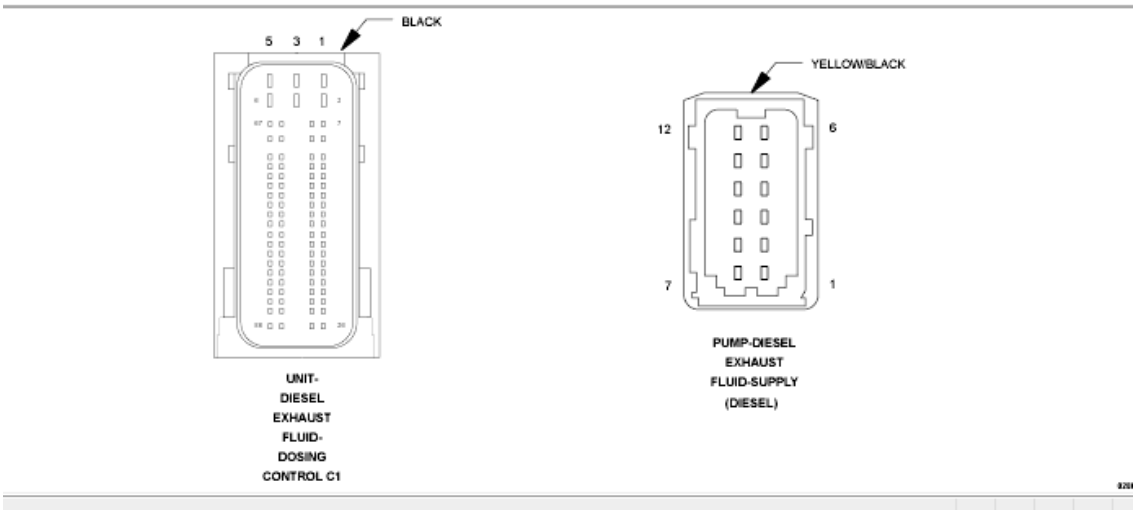

Fig. 55: Diesel Exhaust Fluid (DEF) Dosing Control Unit Wiring Diagram
Courtesy of CHRYSLER GROUP, LLC

For a complete wiring diagram, **refer to appropriate SYSTEM WIRING DIAGRAMS article** .

THEORY OF OPERATION

The Diesel Exhaust Fluid (DEF) Pressure Sensor is a three wire sensor, integrated into the DEF Supply Pump and is not serviceable separate from the pump. The DEF Pressure Sensor monitors supply pressure to the DEF Injector. The Diesel Exhaust Fluid (DEF) Dosing Control Unit provides a 5-Volt Supply and a ground to the DEF Pressure Sensor. The sensor provides a signal to the DEF Dosing Control Unit on the DEF Pressure Sensor Signal circuit. This DEF Pressure Sensor Signal voltage changes, based on the diesel exhaust fluid pressure supplied by the DEF Supply Pump. The DEF Dosing Control Unit uses this information to vary pump speed and maintain the 130 psi (9 bar) pressure needed for proper DEF injection. The DEF Dosing Control Unit will detect a low signal voltage at low diesel exhaust fluid pressures, and a high signal voltage at high diesel exhaust fluid pressures. The DEF Dosing Control Module will illuminate the MIL light via the Powertrain Control Module (PCM) immediately after the diagnostics runs and fails. Diesel exhaust fluid injection into the aftertreatment system is disabled. The DEF Dosing Control Module will turn off the MIL light via the PCM when the monitor runs and passes in three consecutive key cycles.

WHEN MONITORED:

With the ignition on.

SET CONDITION:

The DEF Dosing Control Unit detects that the signal voltage from the sensor falls below 0.25 Volts for one second.

POSSIBLE CAUSES

Possible Causes
(K422) DEF PRESSURE SENSOR SUPPLY CIRCUIT OPEN OR SHORTED TO GROUND
(K423) DEF PRESSURE SENSOR SIGNAL CIRCUIT SHORTED TO GROUND
(K423) DEF PRESSURE SENSOR SIGNAL CIRCUIT SHORTED TO THE (K424) DEF PRESSURE SENSOR GROUND CIRCUIT
DIESEL EXHAUST FLUID SUPPLY PUMP
DIESEL EXHAUST FLUID DOSING CONTROL UNIT

Always perform the Pre-Diagnostic Troubleshooting procedure before proceeding. Refer to PRE-DIAGNOSTIC TROUBLESHOOTING PROCEDURE - 6.7L .

DIAGNOSTIC TEST

1. **ACTIVE DTC**

NOTE: **If DTC P204A is also active, perform the diagnostic procedures for that DTC before continuing with this test.**

1. Ignition on, engine not running.
2. With the scan tool check for active DTCs.

Is the DTC active?

Yes

- Go To 2.

No

- Perform the INTERMITTENT CONDITION diagnostic procedure. Refer to **INTERMITTENT CONDITION - 6.7L** .

2. **CHECK THE DEF PRESSURE SENSOR**
   1. Turn the ignition off.
   2. Disconnect the DEF Supply Pump harness connector.
   3. Turn ignition on.
   4. With the scan tool check DTCs.

   Did DTC P204D become active with the DEF Supply Pump harness connector disconnected?

   Yes

   - Go To 3.

   No

   - Replace the DEF Supply Pump Assembly in accordance with the service information. Refer to **ASSEMBLY, DIESEL EXHAUST FLUID PUMP, REMOVAL** .
   - Perform the POWERTRAIN VERIFICATION TEST. Refer to **POWERTRAIN VERIFICATION TEST - 6.7L** .
3. **CHECK THE (K422) DEF PRESSURE SENSOR SUPPLY CIRCUIT FOR AN OPEN OR SHORT TO GROUND**

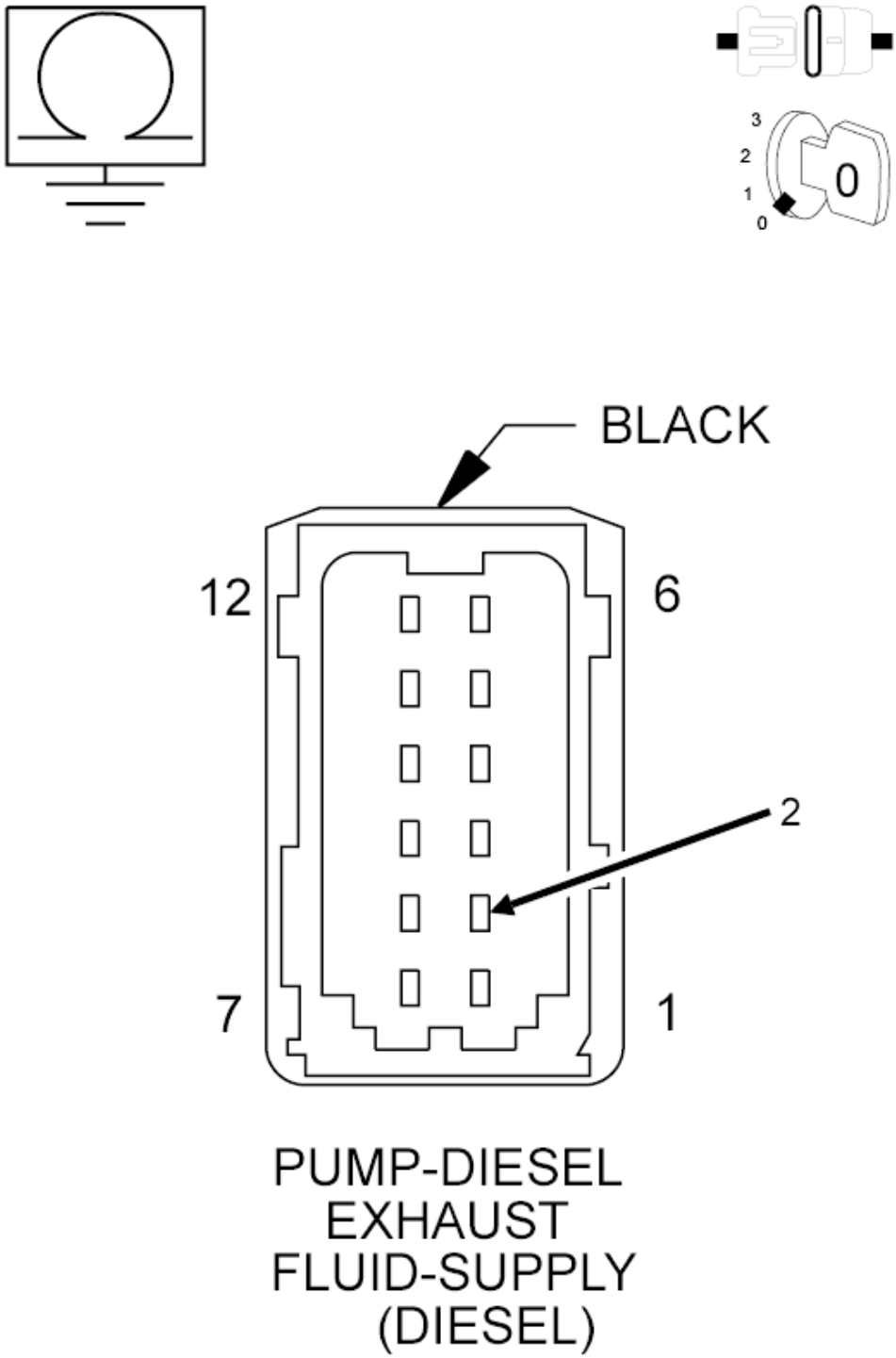

Fig. 56: Checking DEF Pressure Sensor Supply Circuit For An Open Or Short To Ground
Courtesy of CHRYSLER GROUP, LLC

1. Turn ignition off.
2. Disconnect the DEF Dosing Control Unit C1 harness connector.

3. Measure the resistance between ground and the (K422) DEF Pressure Sensor Supply circuit at the DEF Supply Pump harness connector.

   Is the resistance above 10k Ohms?

   Yes

   - Go To 4.

   No

   - Repair the (K422) DEF Pressure Sensor Supply circuit for an open circuit or short to ground.
   - Perform the POWERTRAIN VERIFICATION TEST. Refer to **POWERTRAIN VERIFICATION TEST - 6.7L** .

4. **CHECK THE (K423) DEF PRESSURE SENSOR SIGNAL CIRCUIT FOR A SHORT TO GROUND**

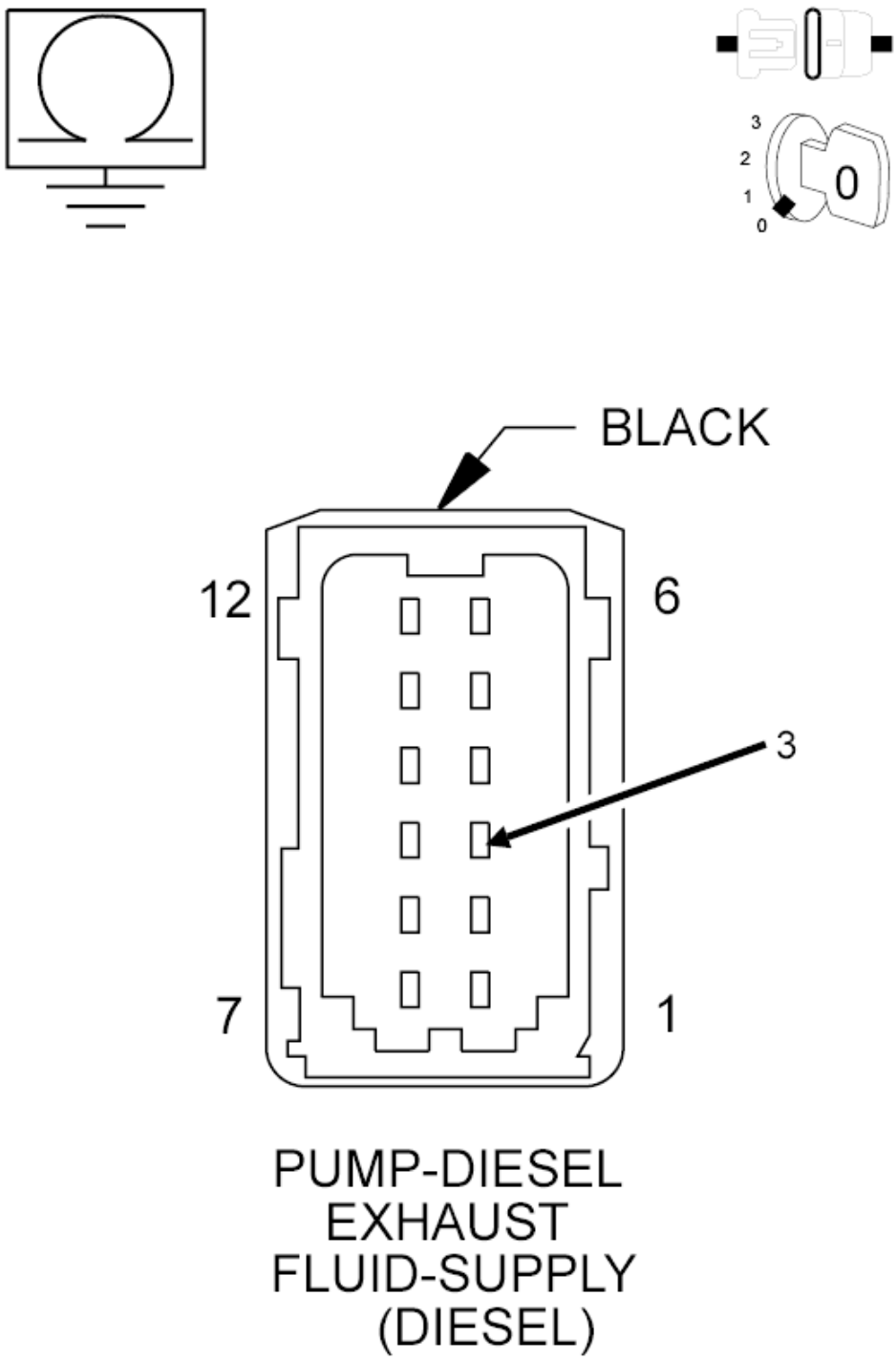

Fig. 57: Checking DEF Pressure Sensor Signal Circuit For A Short To Ground
Courtesy of CHRYSLER GROUP, LLC

1. Turn ignition off.
2. Disconnect the DEF Dosing Control Unit C1 harness connector.

3. Measure the resistance between ground and the (K423) DEF Pressure Sensor Signal circuit at the DEF Supply Pump harness connector.

   Is the resistance above 10k Ohms?

   Yes

   - Go To 5.

   No

   - Repair the (K423) DEF Pressure Sensor Signal circuit for a short to ground.
   - Perform the POWERTRAIN VERIFICATION TEST. Refer to **POWERTRAIN VERIFICATION TEST - 6.7L** .

5. **CHECK FOR THE (K423) DEF PRESSURE SENSOR SIGNAL CIRCUIT SHORTED TO THE (K424) DEF PRESSURE SENSOR GROUND CIRCUIT**

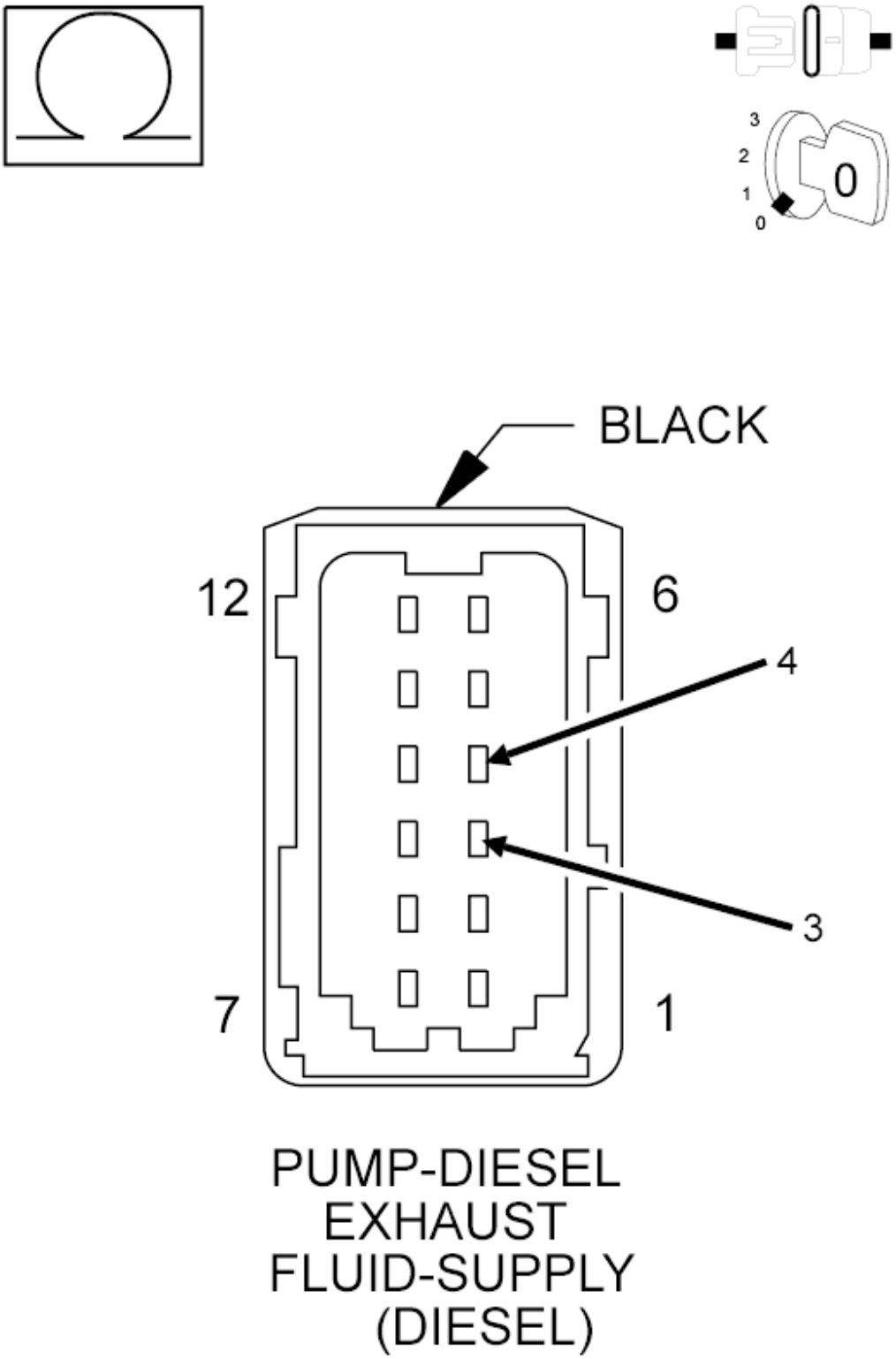

Fig. 58: Checking For DEF Pressure Sensor Signal Circuit For A Short
Courtesy of CHRYSLER GROUP, LLC

1. Measure the resistance between the (K423) DEF Pressure Sensor Signal circuit and the (K424) DEF Pressure Sensor Ground circuit at the DEF Supply Pump harness connector.

   Is the resistance above 10k Ohms?

   Yes

   - Replace the DEF Dosing Control Unit in accordance with the service information. Refer to **UNIT, DIESEL EXHAUST FLUID DOSING CONTROL, REMOVAL** .
   - Perform the POWERTRAIN VERIFICATION TEST. Refer to **POWERTRAIN VERIFICATION TEST - 6.7L** .

   No

   - Repair the short between the (K423) DEF Pressure Sensor Signal circuit and the (K424) DEF Pressure Sensor Ground circuit.
   - Perform the POWERTRAIN VERIFICATION TEST. Refer to **POWERTRAIN VERIFICATION TEST - 6.7L** .

P204D-(DIESEL EXHAUST FLUID) REDUCTANT PRESSURE SENSOR CIRCUIT HIGH

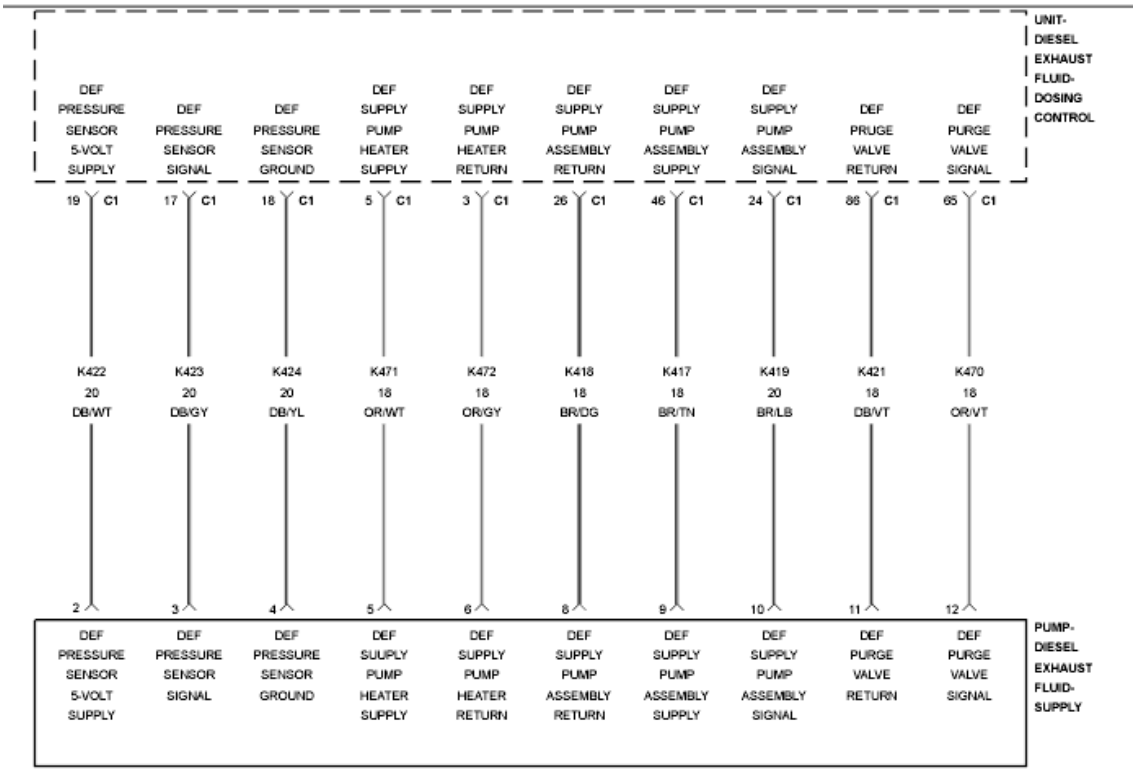

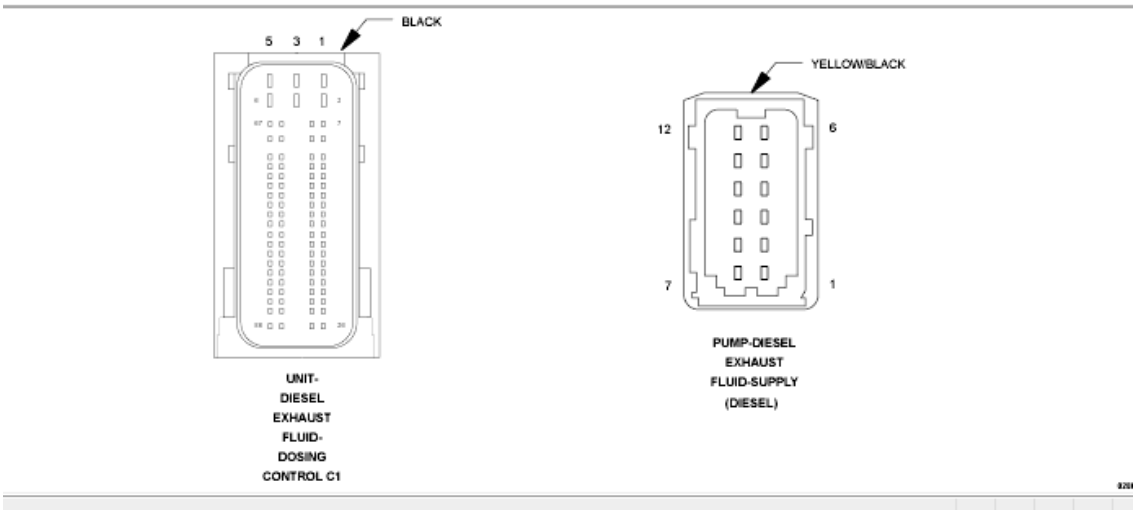

Fig. 59: Diesel Exhaust Fluid (DEF) Dosing Control Unit Wiring Diagram
Courtesy of CHRYSLER GROUP, LLC

For a complete wiring diagram, **refer to appropriate SYSTEM WIRING DIAGRAMS article** .

THEORY OF OPERATION

The Diesel Exhaust Fluid (DEF) Pressure Sensor is a three wire sensor, integrated into the DEF Supply Pump and is not serviceable separate from the pump. The DEF Pressure Sensor monitors supply pressure to the DEF Injector. The Diesel Exhaust Fluid (DEF) Dosing Control Unit provides a 5-Volt Supply and a ground to the DEF Pressure Sensor. The sensor provides a signal to the DEF Dosing Control Unit on the DEF Pressure Sensor Signal circuit. This DEF Pressure Sensor Signal voltage changes, based on the diesel exhaust fluid pressure supplied by the DEF Supply Pump. The DEF Dosing Control Unit uses this information to vary pump speed and maintain the 130 psi (9 bar) pressure needed for proper DEF injection. The DEF Dosing Control Unit will detect a low signal voltage at low diesel exhaust fluid pressures, and a high signal voltage at high diesel exhaust fluid pressures. The DEF Dosing Control Module will illuminate the MIL light via the Powertrain Control Module (PCM) immediately after the diagnostics runs and fails. Diesel exhaust fluid injection into the aftertreatment system is disabled. The DEF Dosing Control Module will turn off the MIL light via the PCM when the monitor runs and passes in three consecutive key cycles.

WHEN MONITORED:

With the ignition on.

SET CONDITION:

The DEF Dosing Control Unit detects that the signal voltage from the sensor is above 4.75 Volts for one second.

POSSIBLE CAUSES

Possible Causes
(K423) DEF PRESSURE SENSOR SIGNAL CIRCUIT SHORTED TO VOLTAGE
(K423) DEF PRESSURE SENSOR SIGNAL CIRCUIT SHORTED TO THE (K422) DEF PRESSURE SENSOR 5-VOLT SUPPLY CIRCUIT
(K423) DEF PRESSURE SENSOR SIGNAL CIRCUIT OPEN/HIGH RESISTANCE
(K424) DEF PRESSURE SENSOR GROUND CIRCUIT OPEN/HIGH RESISTANCE
DIESEL EXHAUST FLUID SUPPLY PUMP
DIESEL EXHAUST FLUID DOSING CONTROL UNIT

Always perform the Pre-Diagnostic Troubleshooting procedure before proceeding. Refer to PRE-DIAGNOSTIC TROUBLESHOOTING PROCEDURE - 6.7L .

DIAGNOSTIC TEST

1. **ACTIVE DTC**
    1. Ignition on, engine not running.
    2. With the scan tool check for active DTCs.

       Is the DTC active?

Yes

- Go To 2.

No

- Perform the INTERMITTENT CONDITION diagnostic procedure. Refer to **INTERMITTENT CONDITION - 6.7L** .

2. **CHECK THE (K423) DEF PRESSURE SENSOR SIGNAL CIRCUIT FOR A SHORT TO VOLTAGE**

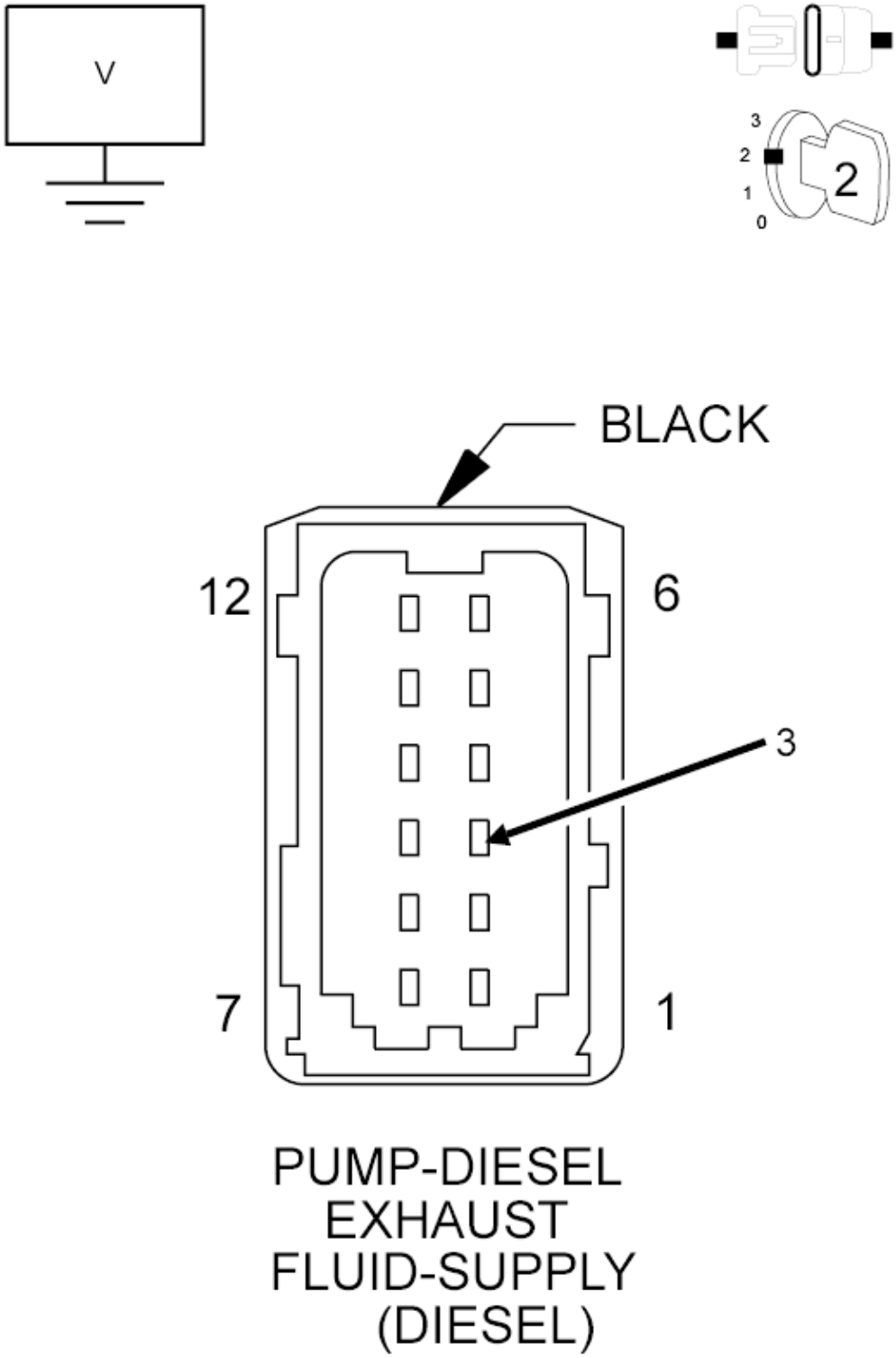

Fig. 60: Checking DEF Pressure Sensor Signal Circuit For A Short To Voltage
Courtesy of CHRYSLER GROUP, LLC

1. Turn ignition off.
2. Disconnect the DEF Supply Pump harness connector.
3. Turn the ignition on.
4. Measure the voltage on the (K423) DEF Pressure Sensor Signal circuit at the DEF Supply Pump harness connector.

   Does the voltage measure above 5.1 Volts?

   Yes

   - Repair the (K423) DEF Pressure Sensor Signal circuit for a short to voltage.
   - Perform the POWERTRAIN VERIFICATION TEST. Refer to **POWERTRAIN VERIFICATION TEST - 6.7L** .

   No

   - Go To 4.

3. **DEF PRESSURE SENSOR**
   1. Turn the ignition off.
   2. Connect a jumper between the (K423) DEF Pressure Sensor Signal circuit and the (K424) DEF Pressure Sensor Ground circuit at the DEF Supply Pump harness connector.
   3. Turn the ignition on, engine not running.
   4. With the scan tool check for DTCs.

      Did DTC P204C set as active after shorting the circuits together?

      Yes

      - Replace the DEF Supply Pump Assembly in accordance with the service information. Refer to **ASSEMBLY, DIESEL EXHAUST FLUID PUMP, REMOVAL** .
      - Perform the POWERTRAIN VERIFICATION TEST. Refer to **POWERTRAIN VERIFICATION TEST - 6.7L** .

      No

      - Go To 4.

4. **CHECK FOR THE (K423) DEF PRESSURE SENSOR SIGNAL CIRCUIT SHORTED TO THE (K422) DEF PRESSURE SENSOR 5-VOLT SUPPLY CIRCUIT**

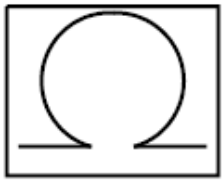

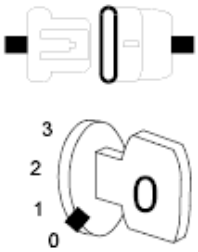

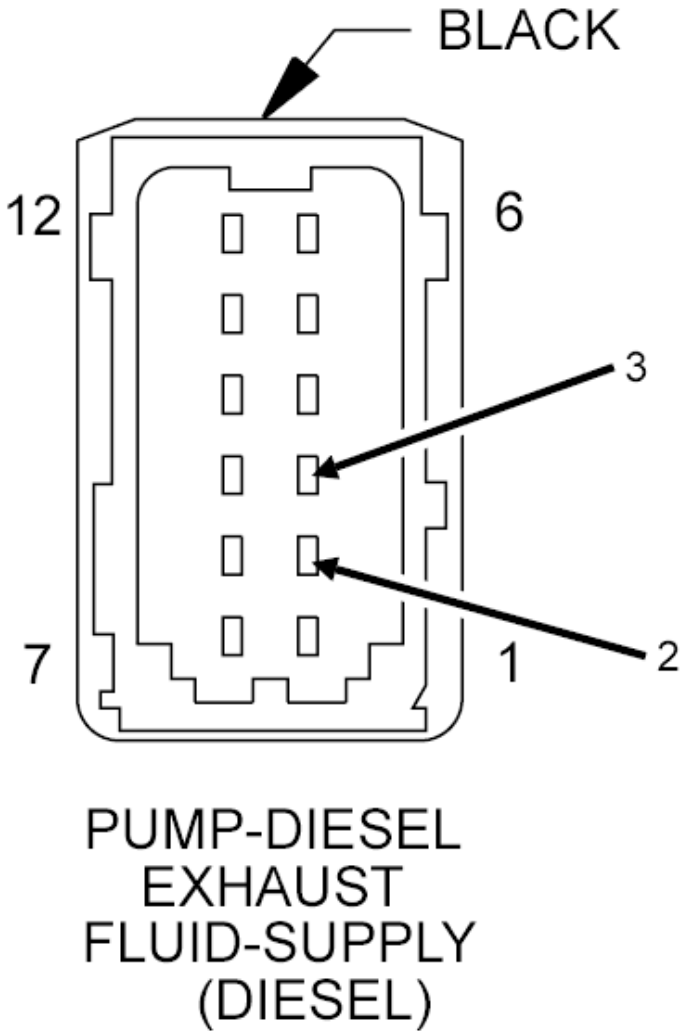

Fig. 61: Checking DEF Pressure Sensor Signal Circuit For A Short
Courtesy of CHRYSLER GROUP, LLC

1. Turn ignition off.

2. Disconnect the DEF Dosing Control Unit C1 harness connector.
3. Measure the resistance between the (K423) DEF Pressure Sensor Signal circuit and the (K422) DEF Pressure Sensor 5-Volt Supply circuit at the DEF Supply Pump harness connector.

   Is the resistance above 10k Ohms?

   Yes

   - Go To 5.

   No

   - Repair the short between the (K423) DEF Pressure Sensor Signal circuit and the (K422) DEF Pressure Sensor 5-Volt Supply circuit.
   - Perform the POWERTRAIN VERIFICATION TEST. Refer to **POWERTRAIN VERIFICATION TEST - 6.7L** .

5. **CHECK THE (K423) DEF PRESSURE SENSOR SIGNAL CIRCUIT FOR AN OPEN/HIGH RESISTANCE**

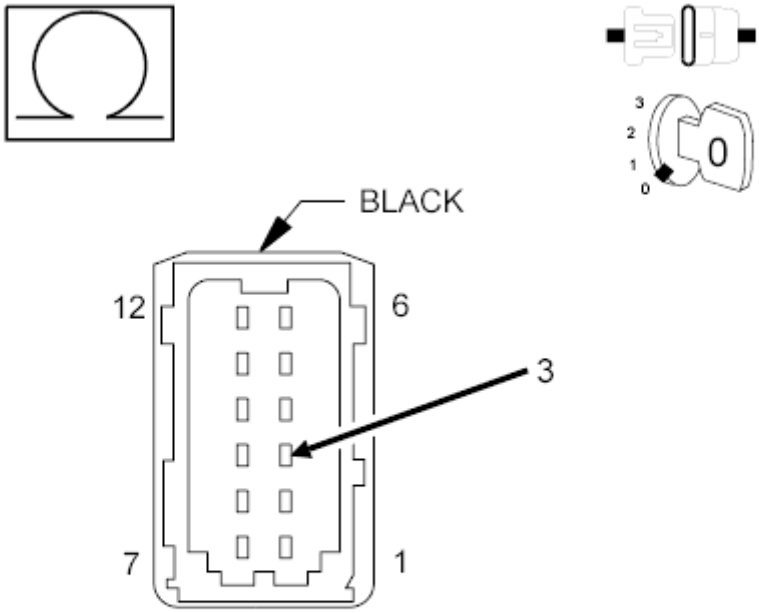

PUMP-DIESEL
EXHAUST
FLUID-SUPPLY
(DIESEL)

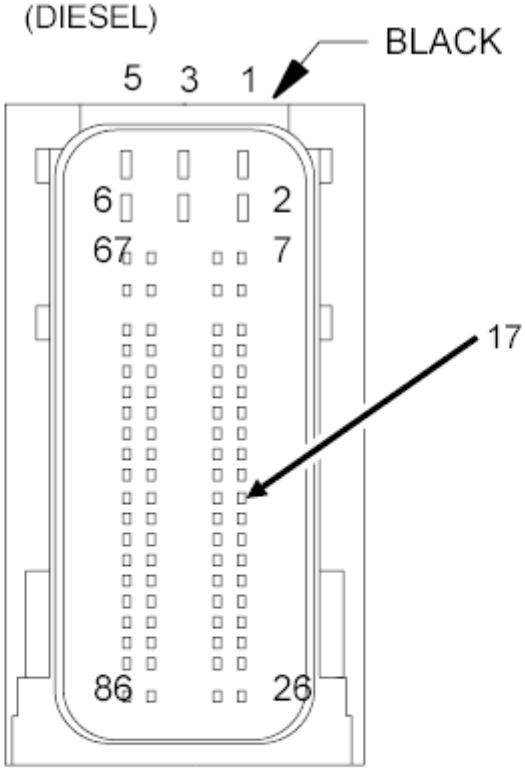

UNIT-
DIESEL
EXHAUST
FLUID-
DOSING

Fig. 62: Checking DEF Pressure Sensor Supply Circuit For A Short To Another Circuit
Courtesy of CHRYSLER GROUP, LLC

1. Measure the resistance of the (K423) DEF Pressure Sensor Signal circuit at the DEF Supply Pump harness connector and the DEF Dosing Control Unit C1 harness connector.

   Is the resistance below 5.0 Ohms?

   Yes

   - Go To 6.

   No

   - Repair the (K423) DEF Pressure Sensor Signal circuit for an open or high resistance.
   - Perform the POWERTRAIN VERIFICATION TEST. Refer to **POWERTRAIN VERIFICATION TEST - 6.7L** .

6. **CHECK THE (K424) DEF PRESSURE SENSOR GROUND CIRCUIT FOR AN OPEN/HIGH RESISTANCE**

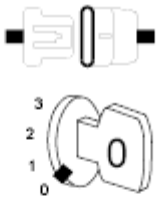

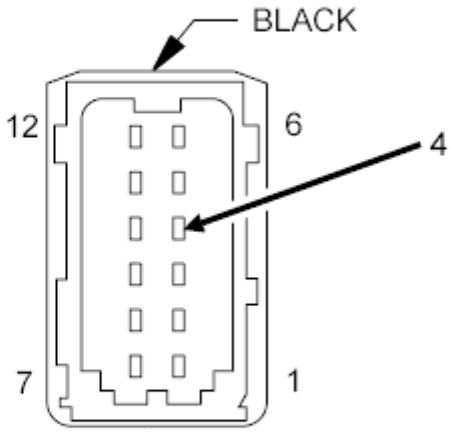

PUMP-DIESEL EXHAUST FLUID-SUPPLY (DIESEL)

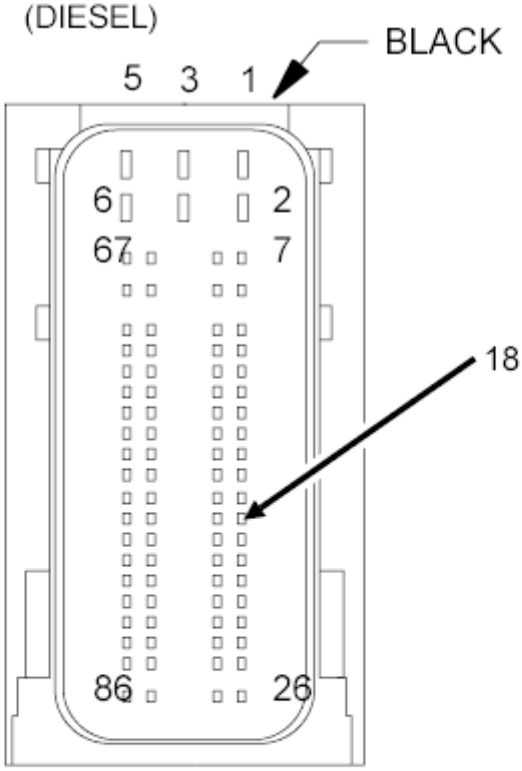

UNIT-DIESEL EXHAUST FLUID-DOSING

Fig. 63: Checking DEF Pressure Sensor Ground Circuit For An Open/High Resistance
Courtesy of CHRYSLER GROUP, LLC

1. Measure the resistance of the (K424) DEF Pressure Sensor Ground circuit at the DEF Supply Pump harness connector and the DEF Dosing Control Unit C1 harness connector.

   Is the resistance below 5.0 Ohms?

   Yes

   - Replace the DEF Dosing Control Unit in accordance with the service information. Refer to **UNIT, DIESEL EXHAUST FLUID DOSING CONTROL, REMOVAL** .
   - Perform the POWERTRAIN VERIFICATION TEST. Refer to **POWERTRAIN VERIFICATION TEST - 6.7L** .

   No

   - Repair the (K424) DEF Pressure Sensor Ground circuit for an open or high resistance.
   - Perform the POWERTRAIN VERIFICATION TEST. Refer to **POWERTRAIN VERIFICATION TEST - 6.7L** .

P204E-(DIESEL EXHAUST FLUID) REDUCTANT PRESSURE SENSOR CIRCUIT INTERMITTENT

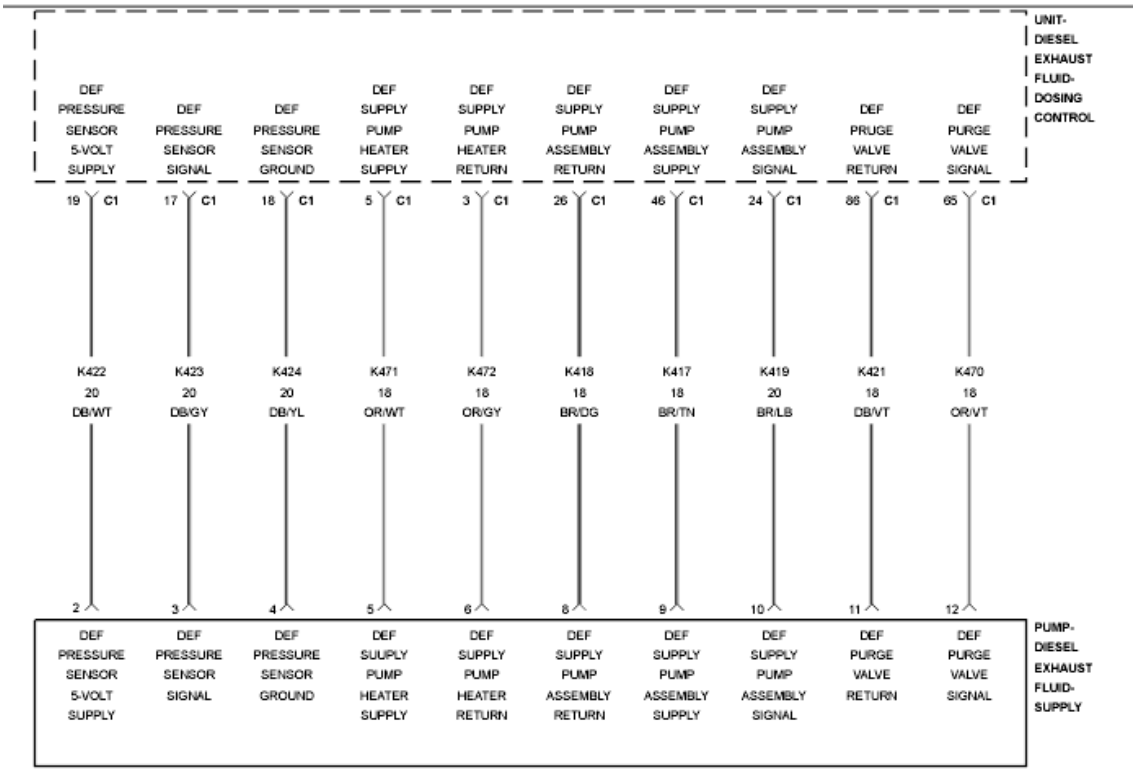

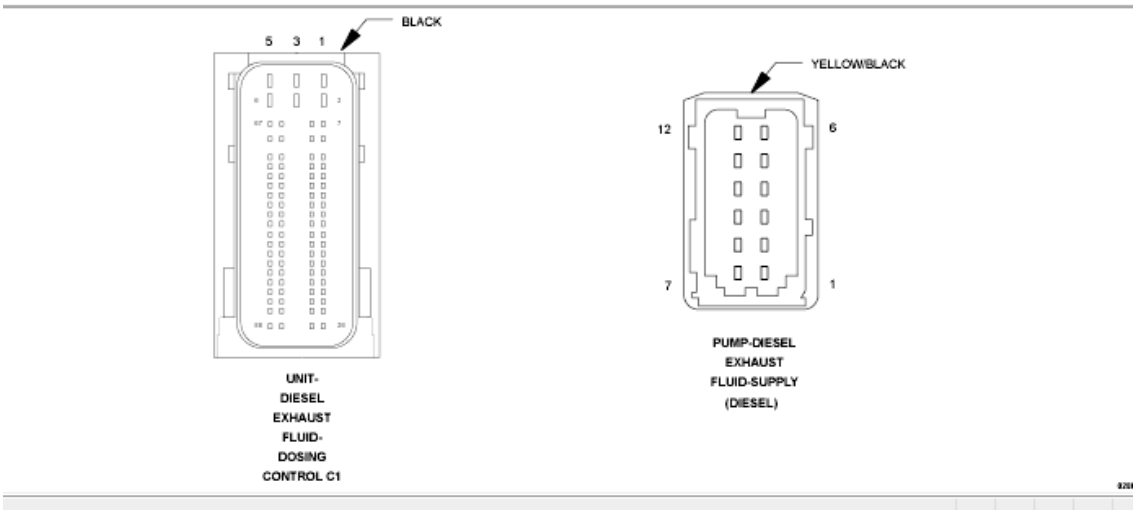

Fig. 64: Diesel Exhaust Fluid (DEF) Dosing Control Unit Wiring Diagram
Courtesy of CHRYSLER GROUP, LLC

For a complete wiring diagram, **refer to appropriate SYSTEM WIRING DIAGRAMS article** .

THEORY OF OPERATION

The Diesel Exhaust Fluid (DEF) Pressure Sensor is a three wire sensor, integrated into the DEF Supply Pump and is not serviceable separate from the pump. The DEF Pressure Sensor monitors supply pressure to the DEF Injector. The Diesel Exhaust Fluid (DEF) Dosing Control Unit provides a 5-Volt Supply and a ground to the DEF Pressure Sensor. The sensor provides a signal to the DEF Dosing Control Unit on the DEF Pressure Sensor Signal circuit. This DEF Pressure Sensor Signal voltage changes, based on the diesel exhaust fluid pressure supplied by the DEF Supply Pump. The DEF Dosing Control Unit uses this information to vary pump speed and maintain the 130 psi (9 bar) pressure needed for proper DEF injection. The DEF Dosing Control Unit will detect a low signal voltage at low diesel exhaust fluid pressures, and a high signal voltage at high diesel exhaust fluid pressures. The DEF Dosing Control Module will illuminate the MIL light via the Powertrain Control Module (PCM) immediately after the diagnostics runs and fails. The DEF Dosing Control Module will turn off the MIL light via the PCM when the monitor runs and passes in three consecutive key cycles.

WHEN MONITORED:

When the DEF Injector is fully primed and is actively maintaining diesel exhaust fluid pressure in the system.

SET CONDITION:

The DEF Dosing Control Unit detects that the DEF system is not able to maintain adequate line pressure.

POSSIBLE CAUSES

Possible Causes
LOW DIESEL EXHAUST FLUID TANK LEVEL
CONTAMINATED DIESEL EXHAUST FLUID
BLOCKED OR RESTRICTED DIESEL EXHAUST FLUID TANK FILTER
BLOCKED OR RESTRICTED DIESEL EXHAUST FLUID SUPPLY PUMP FILTER
BLOCKED, RESTRICTED OR FROZEN DIESEL EXHAUST FLUID SUPPLY PUMP FITTING OR DEF SUPPLY LINE
LEAKING DEF SUPPLY LINE OR DEF PRESSURE LINE
DIESEL EXHAUST FLUID SUPPLY PUMP

Always perform the Pre-Diagnostic Troubleshooting procedure before proceeding. Refer to PRE-DIAGNOSTIC TROUBLESHOOTING PROCEDURE - 6.7L .

DIAGNOSTIC TEST

1. **CHECK THE DEF TANK LEVEL AND FLUID**
    1. Verify the DEF Tank level.
    2. Check the fluid for signs of contamination.

    Is the fluid level in the DEF Tank above the minimum requirement and free of contamination?

    Yes

- Go To 2.

No

- Fill the DEF Tank to the proper level with clean Diesel Exhaust Fluid. If the fluid is contaminated, perform the cleaning procedure. Refer to **TANK, DIESEL EXHAUST FLUID, CLEANING** .
- Perform the POWERTRAIN VERIFICATION TEST. Refer to **POWERTRAIN VERIFICATION TEST - 6.7L** .

2. **ACTIVE DTC**

NOTE: Perform the diagnostics for any other DEF system DTCs that are present with this fault before continuing.

1. Turn the ignition on for one minute, engine not running.
2. With the scan tool, navigate to Systems Tests and actuate the Diesel Exhaust Fluid Doser Pump Override Test.
3. With the scan tool, View DTCs.

Is the DTC active?

Yes

- Go To 3.

No

- Perform the INTERMITTENT CONDITION diagnostic procedure. Refer to **INTERMITTENT CONDITION - 6.7L** .

3. **CHECK FOR LEAKING DEF SUPPLY LINE OR DEF PRESSURE LINE**

1. Turn the ignition off.
2. Visually inspect the DEF Supply and DEF Pressure Lines and fittings for signs of a fluid leak.

Was a leak found in the DEF system?

Yes

- Repair or replace the DEF Lines in accordance with the service information.
- Perform the POWERTRAIN VERIFICATION TEST. Refer to **POWERTRAIN VERIFICATION TEST - 6.7L** .

No

- Go To 4.

4. **CHECK THE DEF SUPPLY PUMP INLET FITTING AND DEF SUPPLY LINE**
    1. Remove the DEF Supply Line.
    2. Inspect the DEF Supply Pump fitting for blockage or debris.
    3. Using regulated low pressure shop air, check the DEF Supply Line for a restriction. Blow the air in the opposite direction of the fluid flow.

    Were any restrictions found?

    Yes

    - Perform the appropriate repair.
    - Perform the POWERTRAIN VERIFICATION TEST. Refer to **POWERTRAIN VERIFICATION TEST - 6.7L** .

    No

    - Go To 5.
5. **CHECK THE DEF SUPPLY PUMP FILTER**
    1. Reinstall the DEF Supply Line.
    2. Remove and inspect the DEF Supply Pump Filter.

    Is the DEF Supply Pump Filter blocked or restricted?

    Yes

    - Replace the DEF Supply Pump Filter in accordance with the service information.
    - Perform the POWERTRAIN VERIFICATION TEST. Refer to **POWERTRAIN VERIFICATION TEST - 6.7L** .

    No

    - Go To 6.
6. **CHECK THE DEF TANK FILTER**
    1. Reinstall the DEF Supply Pump Filter.
    2. Remove the DEF Tank Level/Temperature Sensor Assembly and inspect the DEF Tank Filter.

    Is the DEF Tank Filter blocked or restricted?

    Yes

    - Replace the DEF Tank Level/Temperature Sensor Assembly in accordance with the service information. Refer to **SENSOR, DIESEL EXHAUST FLUID LEVEL/TEMPERATURE, REMOVAL** .
    - Perform the POWERTRAIN VERIFICATION TEST. Refer to **POWERTRAIN**

VERIFICATION TEST - 6.7L .

No

- Replace the DEF Supply Pump Assembly in accordance with the service information. Refer to **ASSEMBLY, DIESEL EXHAUST FLUID PUMP, REMOVAL** .
- Perform the POWERTRAIN VERIFICATION TEST. Refer to **POWERTRAIN VERIFICATION TEST - 6.7L** .

P205B-(DIESEL EXHAUST FLUID) REDUCTANT TANK TEMPERATURE SENSOR CIRCUIT RANGE/PERFORMANCE

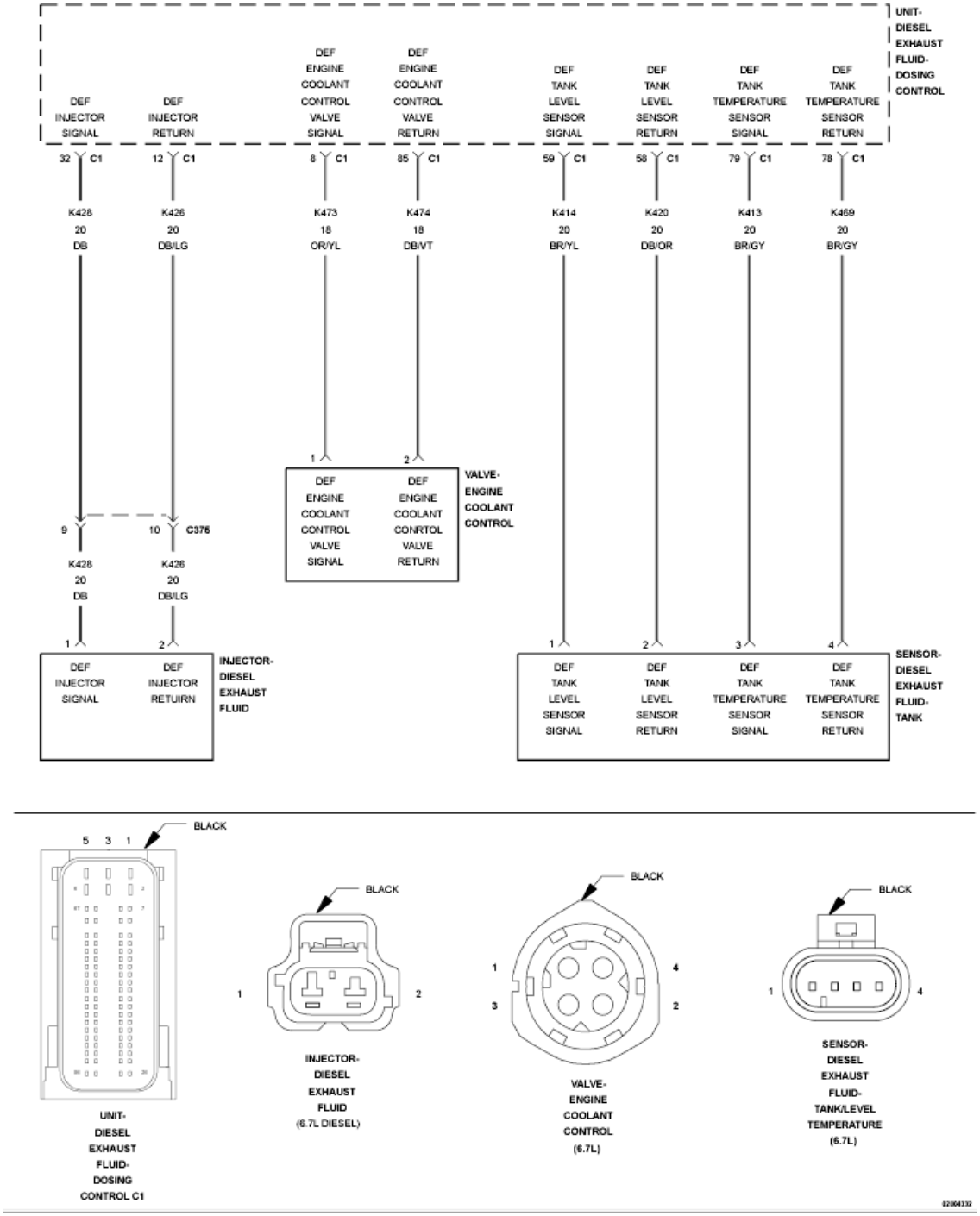

Fig. 65: Diesel Exhaust Fluid Reductant Tank Heater Control Circuit Wiring Diagram
Courtesy of CHRYSLER GROUP, LLC

For a complete wiring diagram, **refer to appropriate SYSTEM WIRING DIAGRAMS article** .

THEORY OF OPERATION

The Diesel Exhaust Fluid (DEF) Tank Level Sensor and Diesel Exhaust Fluid (DEF) Tank Temperature Sensor

are a combination sensor used to measure the level and temperature of the fluid in the DEF Tank. Though combined, the level sensor and the temperature sensor operate independent of each other. Both sensors operate as a two wire 5-Volt sensor. The DEF Tank Level Sensor is a 14 point magnetic reed switch sensor. The DEF Tank Temperature Sensor is a negative temperature coefficient sensor. The DEF Dosing Control Unit will illuminate the MIL lamp via the Powertrain Control Module (PCM) immediately after this diagnostic runs and fails. The DEF Dosing Control Unit will turn off the MIL lamp via the PCM immediately after the diagnostic runs and passes in three consecutive key cycles.

WHEN MONITORED:

This monitor runs continuously when Diesel Exhaust Fluid Tank heating is commanded.

SET CONDITION:

The DEF Dosing Control Unit does not detect a corresponding temperature increase by the DEF Tank Temperature Sensor after the Diesel Exhaust Fluid Tank heating is commanded on.

POSSIBLE CAUSES

Possible Causes
DIESEL EXHAUST FLUID ENGINE COOLANT CONTROL VALVE PHYSICALLY STUCK OPEN
ENGINE COOLANT CONTROL VALVE
DEF CONTROL UNIT

Always perform the Pre-Diagnostic Troubleshooting procedure before proceeding. Refer to PRE-DIAGNOSTIC TROUBLESHOOTING PROCEDURE - 6.7L .

DIAGNOSTIC TEST

1. **CHECK THE ENGINE COOLANT LEVEL**

NOTE: **If there are DTCs present for the DEF Tank Temperature Sensor or DEF Engine Coolant Control Valve, perform those diagnostic procedures before continuing with this test procedure.**

1. Turn the ignition off.
2. Verify the engine coolant level.

   Is the engine coolant level above the minimum?

   Yes

   - Go To 2.

   No

- Fill the engine coolant to the proper level.
- Perform the POWERTRAIN VERIFICATION TEST. Refer to **POWERTRAIN VERIFICATION TEST - 6.7L** .

2. **CHECK FOR BLOCKED OR RESTRICTED ENGINE COOLANT LINES/HOSES**
   1. Visually inspect the engine coolant supply and return lines for signs of a restriction of leaks.

      Were any restrictions or leaks found?

      Yes

      - Repair or replace the engine coolant lines in accordance with the service information.
      - Perform the POWERTRAIN VERIFICATION TEST. Refer to **POWERTRAIN VERIFICATION TEST - 6.7L** .

      No

      - Go To 3.
3. **CHECK FOR BLOCKED OR RESTRICTED DIESEL EXHAUST FLUID TANK HEATER**
   1. Remove the coolant lines at the DEF Tank Heater Coil.
   2. Blow regulated low pressure shop air through the DEF Tank Heater Coil.

      Were any restrictions found?

      Yes

      - Replace the DEF Tank Heater Coil in accordance with the service information. Refer to **SENSOR, DIESEL EXHAUST FLUID LEVEL/TEMPERATURE, REMOVAL** .
      - Perform the POWERTRAIN VERIFICATION TEST. Refer to **POWERTRAIN VERIFICATION TEST - 6.7L** .

      No

      - Replace the DEF Engine Coolant Control Valve in accordance with the service information. Refer to **VALVE, DIESEL EXHAUST FLUID ENGINE COOLANT CONTROL, REMOVAL** .
      - Perform the POWERTRAIN VERIFICATION TEST. Refer to **POWERTRAIN VERIFICATION TEST - 6.7L** .

P205C-(DIESEL EXHAUST FLUID) REDUCTANT TANK TEMPERATURE SENSOR CIRCUIT LOW

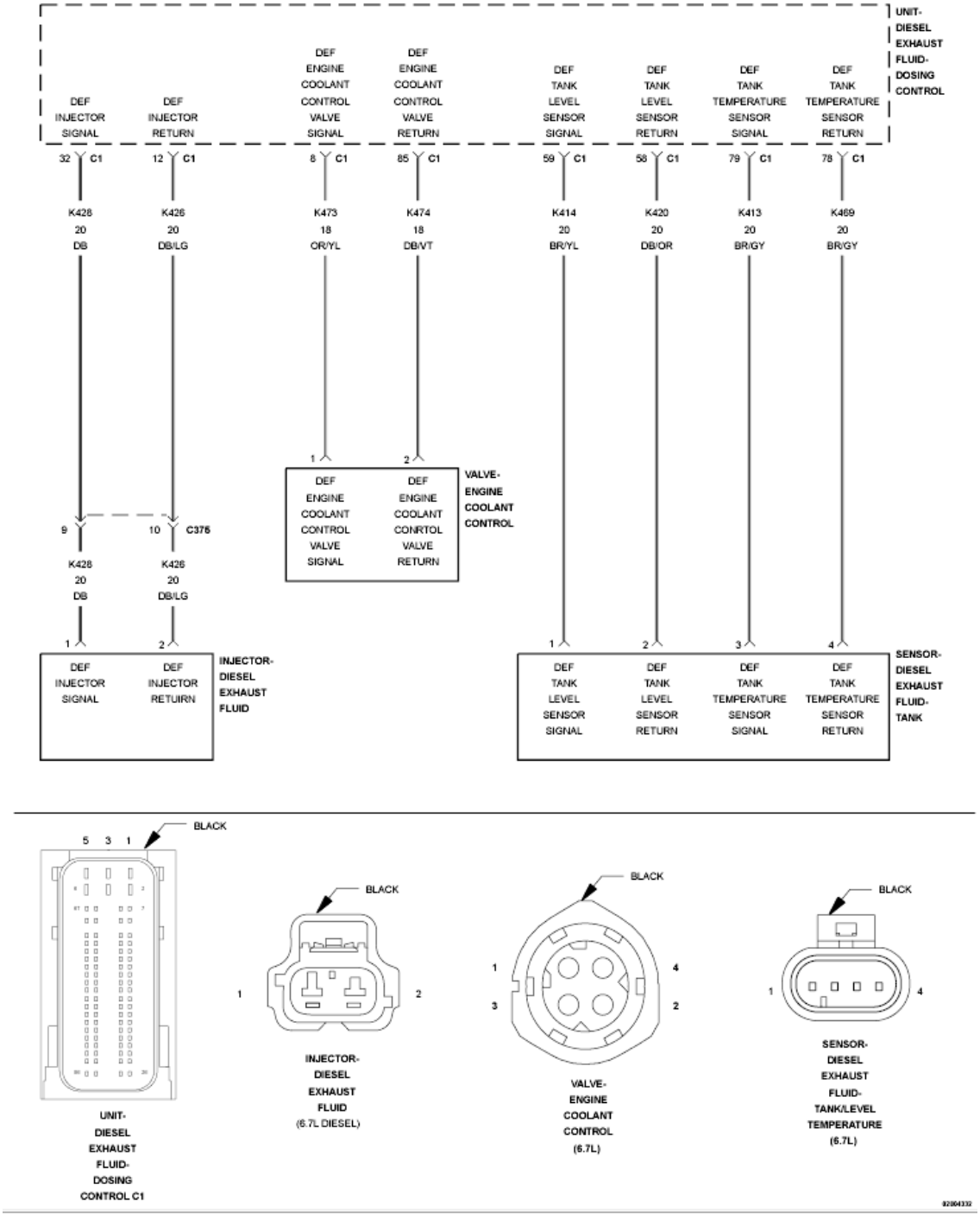

Fig. 66: Diesel Exhaust Fluid Reductant Tank Heater Control Circuit Wiring Diagram
Courtesy of CHRYSLER GROUP, LLC

For a complete wiring diagram, **refer to appropriate SYSTEM WIRING DIAGRAMS article** .

THEORY OF OPERATION

The Diesel Exhaust Fluid (DEF) Tank Level Sensor and Diesel Exhaust Fluid (DEF) Tank Temperature Sensor

are a combination sensor used to measure the level and temperature of the fluid in the DEF Tank. Though combined, the level sensor and the temperature sensor operate independent of each other. Both sensors operate as a two wire 5-Volt sensor. The DEF Tank Level Sensor is a 14 point magnetic reed switch sensor. The DEF Tank Temperature Sensor is a negative temperature coefficient sensor. The DEF Dosing Control Unit will illuminate the MIL lamp via the Powertrain Control Module (PCM) immediately after this diagnostic runs and fails. The DEF Dosing Control Unit will turn off the MIL lamp via the PCM immediately after the diagnostic runs and passes in three consecutive key cycles.

WHEN MONITORED:

With the ignition on.

SET CONDITION:

The DEF Dosing Control Unit detects that the DEF Tank Temperature Sensor Signal circuit is below 0.2 of a Volt for one second.

POSSIBLE CAUSES

Possible Causes
(K413) DIESEL EXHAUST FLUID TANK TEMPERATURE SENSOR SIGNAL CIRCUIT SHORTED TO GROUND
(K413) DEF TANK TEMPERATURE SENSOR SIGNAL CIRCUIT SHORTED TO THE (K469) DIESEL EXHAUST FLUID TANK TEMPERATURE SENSOR RETURN CIRCUIT
DIESEL EXHAUST FLUID TANK TEMPERATURE SENSOR
DIESEL EXHAUST FLUID DOSING CONTROL UNIT

Always perform the Pre-Diagnostic Troubleshooting procedure before proceeding. Refer to PRE-DIAGNOSTIC TROUBLESHOOTING PROCEDURE - 6.7L .

DIAGNOSTIC TEST

1. **ACTIVE DTC**
    1. Turn the ignition on for one minute, engine not running.
    2. With the scan tool check for active DTCs.

       Is the DTC active?

       Yes

       - Go To 2.

       No

       - Perform the INTERMITTENT CONDITION diagnostic procedure. Refer to **INTERMITTENT CONDITION - 6.7L** .

2. **CHECK THE DEF TANK LEVEL SENSOR**
    1. Ignition on, engine not running.
    2. Disconnect the DEF Tank Level/Temperature Sensor harness connector.
    3. With the scan tool check DTCs.
    4. Monitor the scan tool for one minute.

    Did DTC P205D set as active after disconnecting the sensor?

    Yes

    - Replace the DEF Tank Level/Temperature Sensor in accordance with the service information.
    - Perform the POWERTRAIN VERIFICATION TEST. Refer to **POWERTRAIN VERIFICATION TEST - 6.7L** .

    No

    - Go To 3.
3. **CHECK THE (K413) DEF TANK TEMPERATURE SENSOR SIGNAL CIRCUIT FOR A SHORT TO GROUND**

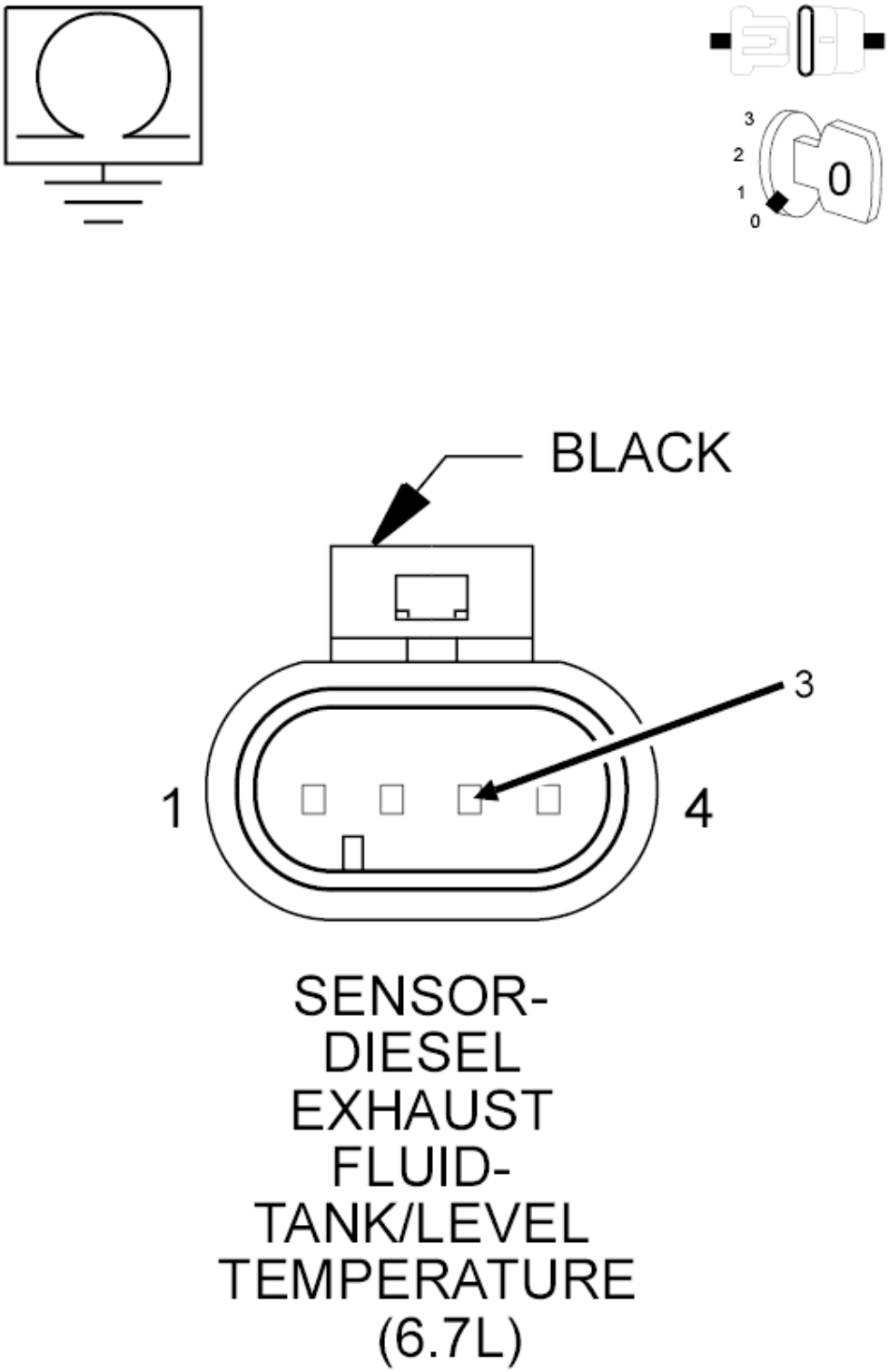

Fig. 67: Checking DEF Tank Temperature Sensor Signal Circuit For A Short To Ground
Courtesy of CHRYSLER GROUP, LLC

1. Turn ignition off.
2. Disconnect the DEF Dosing Control Unit C1 harness connector.
3. Measure the resistance between ground and the (K413) DEF Tank Temperature Sensor Signal circuit at the DEF Tank Level/Temperature Sensor harness connector.

   Is the resistance above 10k Ohms?

   Yes

   - Go To 4.

   No

   - Repair the (K413) DEF Tank Temperature Sensor Signal circuit for a short to ground.
   - Perform the POWERTRAIN VERIFICATION TEST. Refer to **POWERTRAIN VERIFICATION TEST - 6.7L** .

4. **CHECK FOR THE (K413) DEF TANK TEMPERATURE SENSOR SIGNAL CIRCUIT SHORTED TO THE (K469) DEF TANK TEMPERATURE SENSOR RETURN CIRCUIT**

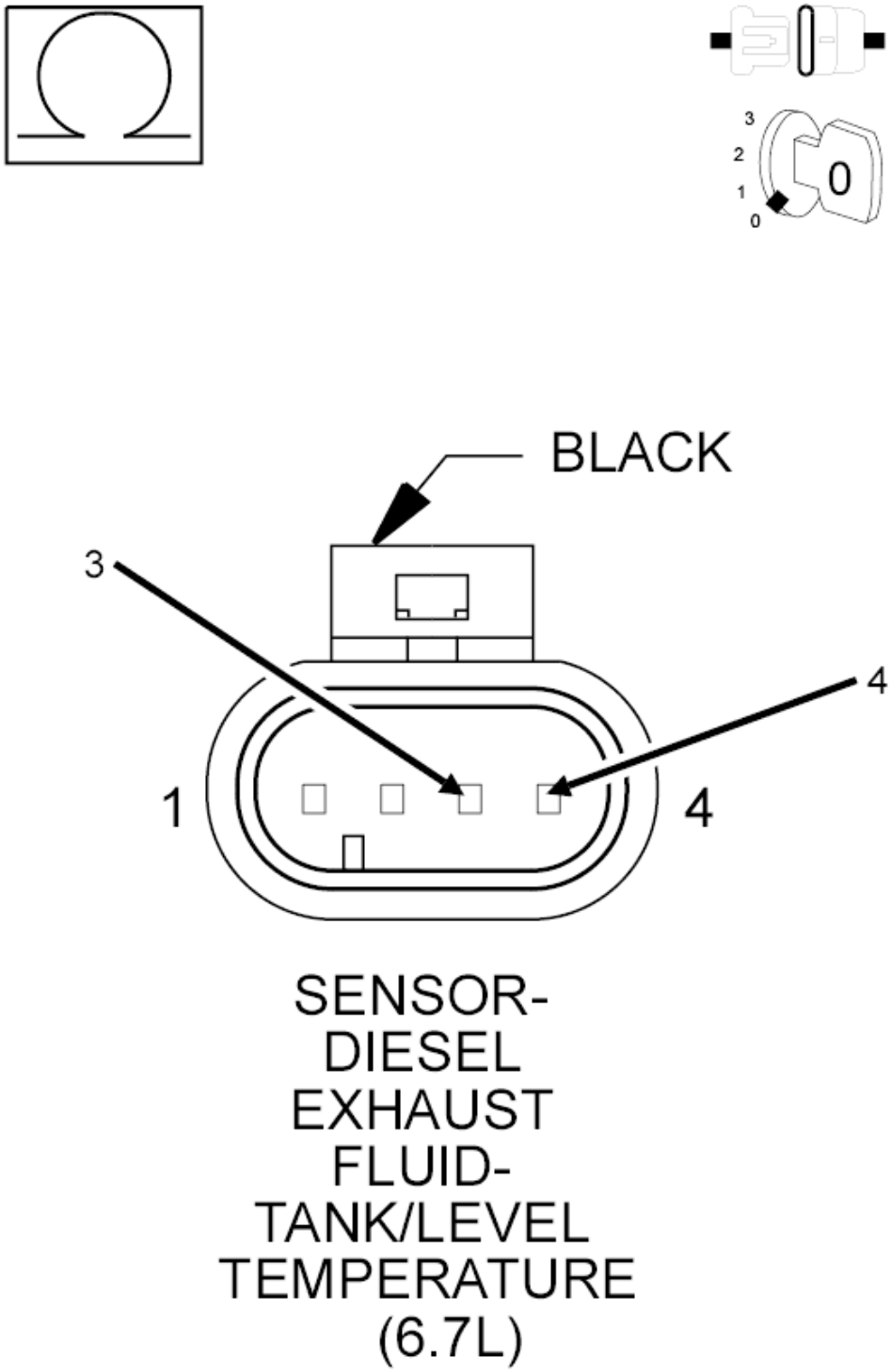

Fig. 68: Checking DEF Tank Temperature Sensor Signal Circuit For A Short
Courtesy of CHRYSLER GROUP, LLC

1. Measure the resistance between the (K413) DEF Tank Temperature Sensor Signal circuit and the

(K469) DEF Tank Temperature Sensor Return circuit at the DEF Tank Level/Temperature harness connector.

Is the resistance above 10k Ohms?

Yes

- Replace the DEF Dosing Control Unit in accordance with the service information. Refer to **UNIT, DIESEL EXHAUST FLUID DOSING CONTROL, REMOVAL** .
- Perform the POWERTRAIN VERIFICATION TEST. Refer to **POWERTRAIN VERIFICATION TEST - 6.7L** .

No

- Repair the short between the (K413) DEF Tank Temperature Sensor Signal circuit and the (K469) Fuel Temperature Sensor Return circuit.
- Perform the POWERTRAIN VERIFICATION TEST. Refer to **POWERTRAIN VERIFICATION TEST - 6.7L** .

P205D-(DIESEL EXHAUST FLUID) REDUCTANT TANK TEMPERATURE SENSOR CIRCUIT HIGH

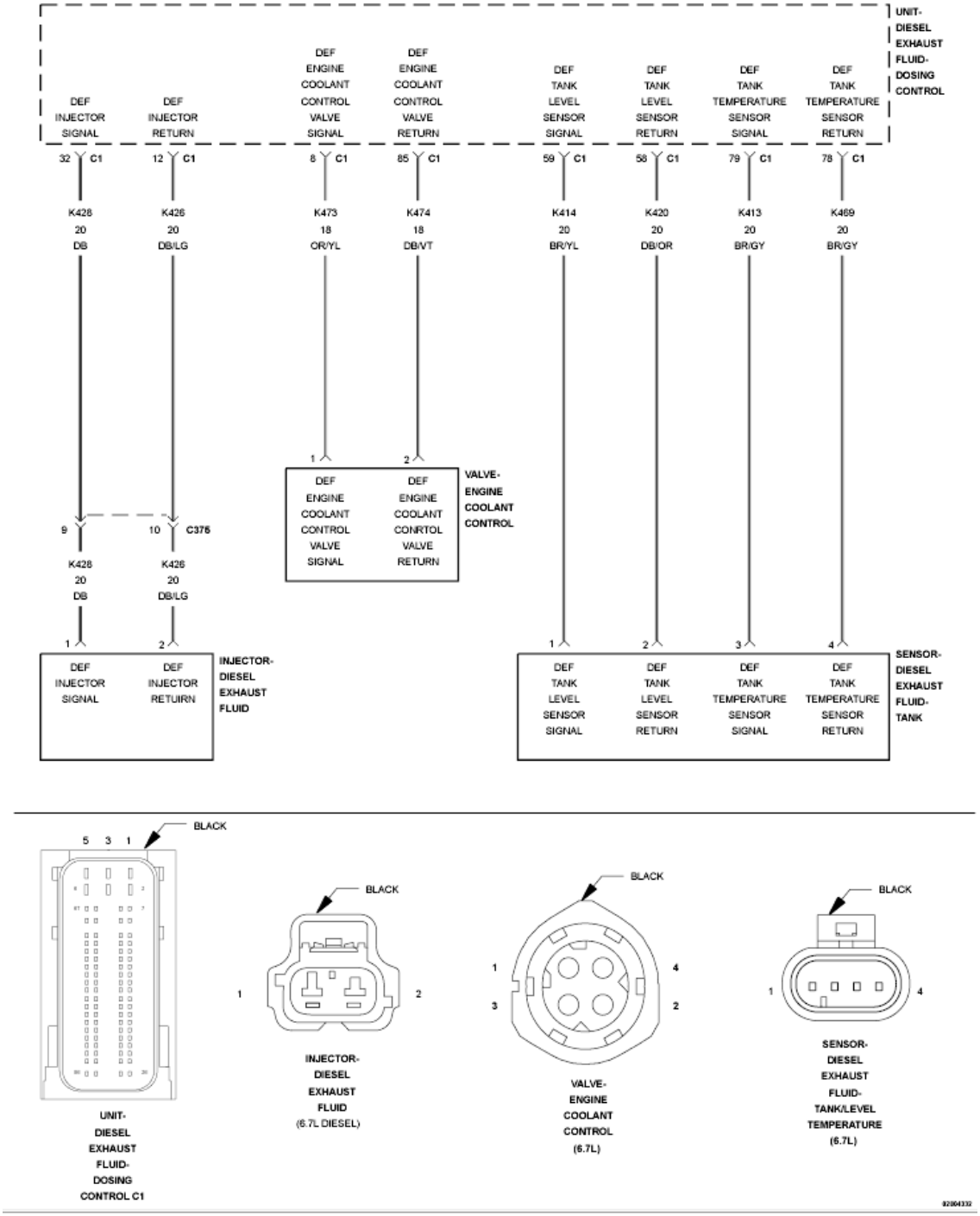

Fig. 69: Diesel Exhaust Fluid Reductant Tank Heater Control Circuit Wiring Diagram
Courtesy of CHRYSLER GROUP, LLC

For a complete wiring diagram, **refer to appropriate SYSTEM WIRING DIAGRAMS article** .

THEORY OF OPERATION

The Diesel Exhaust Fluid (DEF) Tank Level Sensor and Diesel Exhaust Fluid (DEF) Tank Temperature Sensor

are a combination sensor used to measure the level and temperature of the fluid in the DEF Tank. Though combined, the level sensor and the temperature sensor operate independent of each other. Both sensors operate as a two wire 5-Volt sensor. The DEF Tank Level Sensor is a 14 point magnetic reed switch sensor. The DEF Tank Temperature Sensor is a negative temperature coefficient sensor. The DEF Dosing Control Unit will illuminate the MIL lamp via the Powertrain Control Module (PCM) immediately after this diagnostic runs and fails. The DEF Dosing Control Unit will turn off the MIL lamp via the PCM immediately after the diagnostic runs and passes. The DEF system will continue to dose and the NOx monitor will continue to execute while the DTC is active.

WHEN MONITORED:

With the ignition on.

SET CONDITION:

The DEF Dosing Control Unit detects that the (K413) DEF Tank Temperature Sensor Signal circuit is above 4.7 Volts for one second.

POSSIBLE CAUSES

Possible Causes
(K413) DIESEL EXHAUST FLUID TANK TEMPERATURE SENSOR SIGNAL CIRCUIT SHORTED TO VOLTAGE
(K413) DIESEL EXHAUST FLUID TANK TEMPERATURE SENSOR SIGNAL CIRCUIT OPEN/HIGH RESISTANCE
(K469) DIESEL EXHAUST FLUID TANK TEMPERATURE SENSOR RETURN CIRCUIT OPEN/HIGH RESISTANCE
DIESEL EXHAUST FLUID TANK TEMPERATURE SENSOR
DIESEL EXHAUST FLUID DOSING CONTROL UNIT

Always perform the Pre-Diagnostic Troubleshooting procedure before proceeding. Refer to PRE-DIAGNOSTIC TROUBLESHOOTING PROCEDURE - 6.7L .

DIAGNOSTIC TEST

1. **ACTIVE DTC**
    1. Turn the ignition on for one minute, engine not running.
    2. With the scan tool check for active DTCs.

    Is the DTC active?

    Yes

    - Go To 2.

    No

- Perform the INTERMITTENT CONDITION diagnostic procedure. Refer to **INTERMITTENT CONDITION - 6.7L** .

2. **CHECK THE (K413) DEF TANK TEMPERATURE SENSOR SIGNAL CIRCUIT FOR A SHORT TO VOLTAGE**

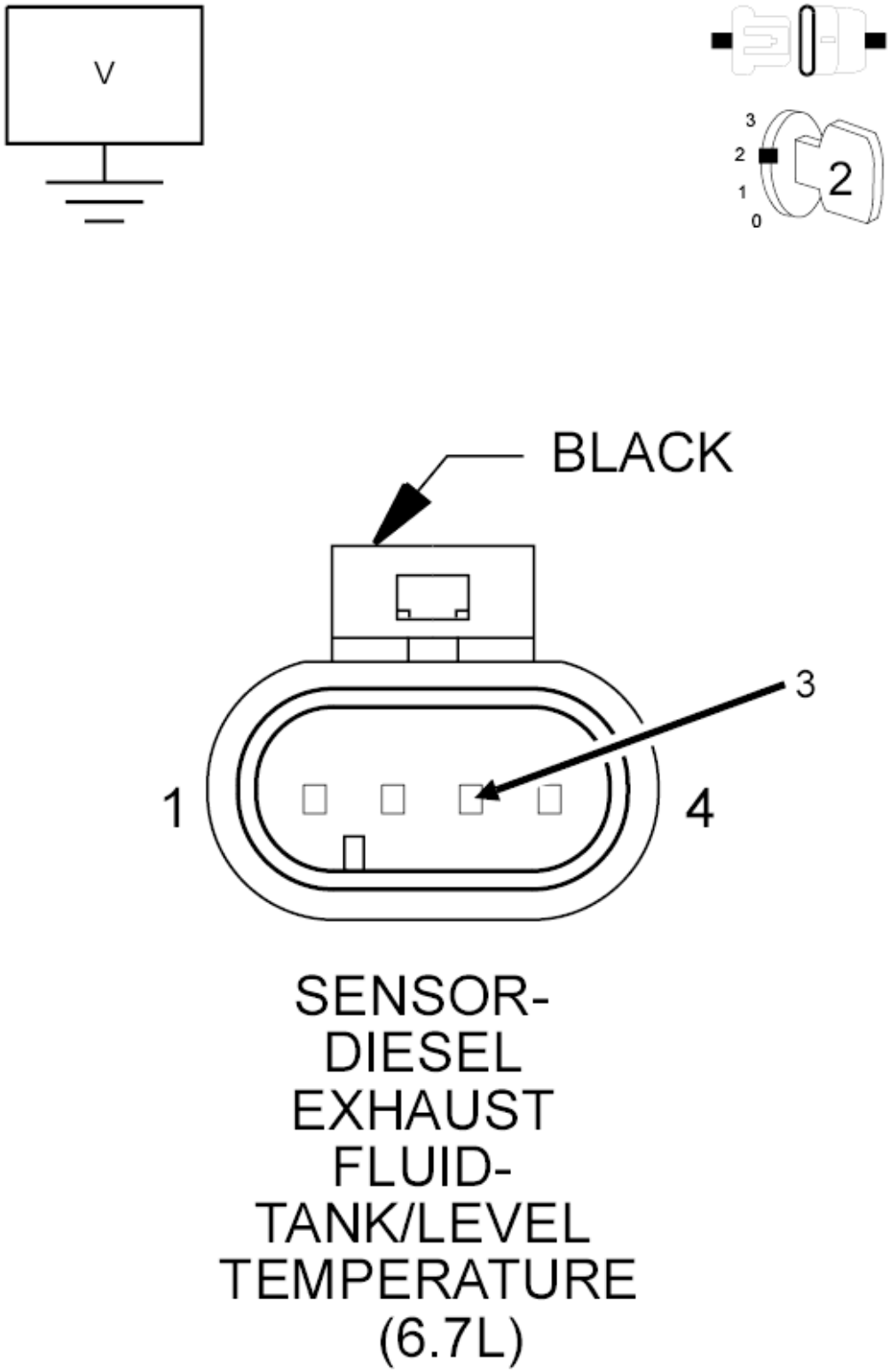

Fig. 70: Checking The DEF Tank Temperature Sensor Signal Circuit For A Short To Voltage
Courtesy of CHRYSLER GROUP, LLC

1. Turn ignition off.
2. Disconnect the DEF Tank Level/Tank Temperature Sensor harness connector.
3. Turn the ignition on.
4. Measure the voltage on the (K413) DEF Tank Temperature Sensor Signal circuit at the DEF Tank Level/Temperature Sensor harness connector.

   Does the voltage measure above 5.1 Volts?

   Yes

   - Repair the (K413) DEF Tank Temperature Sensor Signal circuit for a short to voltage.
   - Perform the POWERTRAIN VERIFICATION TEST. Refer to **POWERTRAIN VERIFICATION TEST - 6.7L** .

   No

   - Go To 3.

3. **CHECK THE FUEL TEMPERATURE SENSOR**
   1. Ignition on, engine not running.
   2. Connect a jumper between the (K413) DEF Tank Temperature Sensor Signal circuit and the (K469) DEF Tank Temperature Sensor Return circuit at the DEF Tank Level/Temperature harness connector.
   3. With the scan tool check for DTCs.
   4. Monitor the scan tool for one minute.

      Did DTC P205C set as active after shorting the circuits together?

      Yes

      - Replace the DEF Tank Level/Temperature Sensor in accordance with the service information. Refer to **SENSOR, DIESEL EXHAUST FLUID LEVEL/TEMPERATURE, REMOVAL** .
      - Perform the POWERTRAIN VERIFICATION TEST. Refer to **POWERTRAIN VERIFICATION TEST - 6.7L** .

      No

      - Go To 4.

4. **CHECK THE (K413) DEF TANK TEMPERATURE SENSOR SIGNAL CIRCUIT FOR AN OPEN/HIGH RESISTANCE**

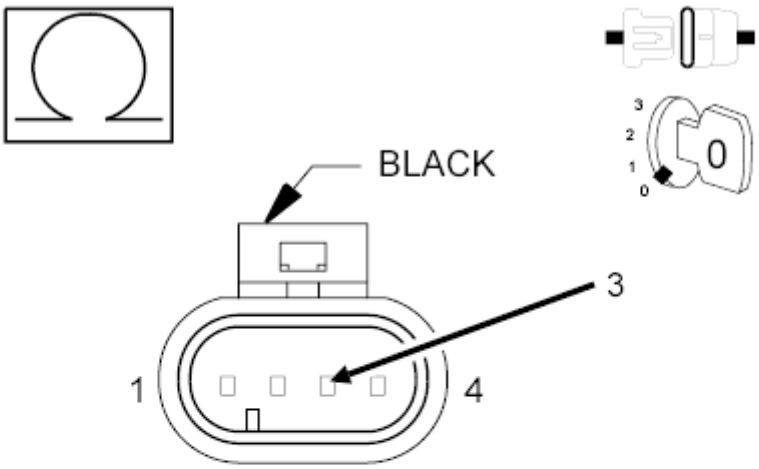

SENSOR-
DIESEL
EXHAUST
FLUID-
TANK/LEVEL
TEMPERATURE
(6.7L)

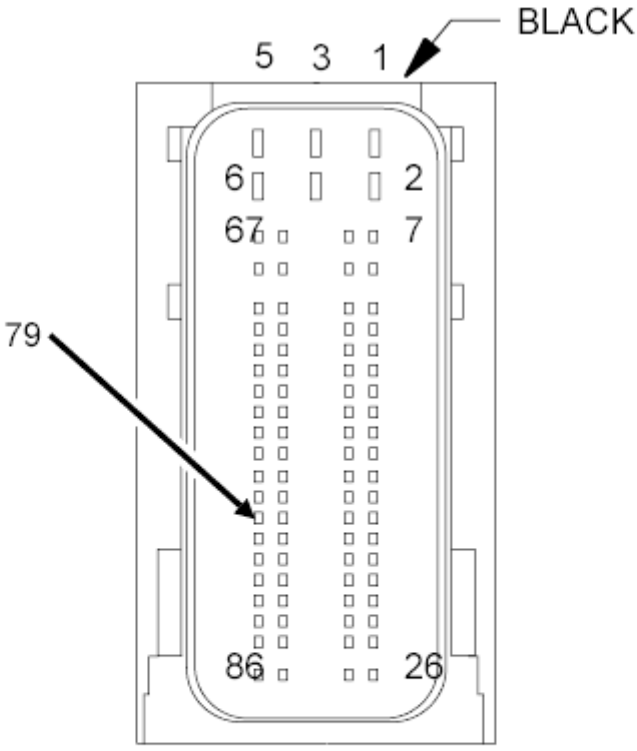

UNIT-
DIESEL
EXHAUST
FLUID-
DOSING

Fig. 71: Checking DEF Tank Temperature Sensor Signal Circuit For An Open Or High
Courtesy of CHRYSLER GROUP, LLC

1. Turn ignition off.
2. Disconnect the DEF Dosing Control Unit C1 harness connector.
3. Measure the resistance of the (K413) DEF Tank Temperature Sensor Signal circuit between the DEF Tank Level/Temperature Sensor harness connector and the DEF Dosing Control Unit C1 harness connector.

   Is the resistance below 5.0 Ohms?

   Yes

   - Go To 5.

   No

   - Repair the (K413) DEF Tank Temperature Sensor Signal circuit for an open or high resistance.
   - Perform the POWERTRAIN VERIFICATION TEST. Refer to **POWERTRAIN VERIFICATION TEST - 6.7L** .

5. **CHECK THE (K469) DEF TANK LEVEL TEMPERATURE RETURN CIRCUIT FOR AN OPEN/HIGH RESISTANCE**

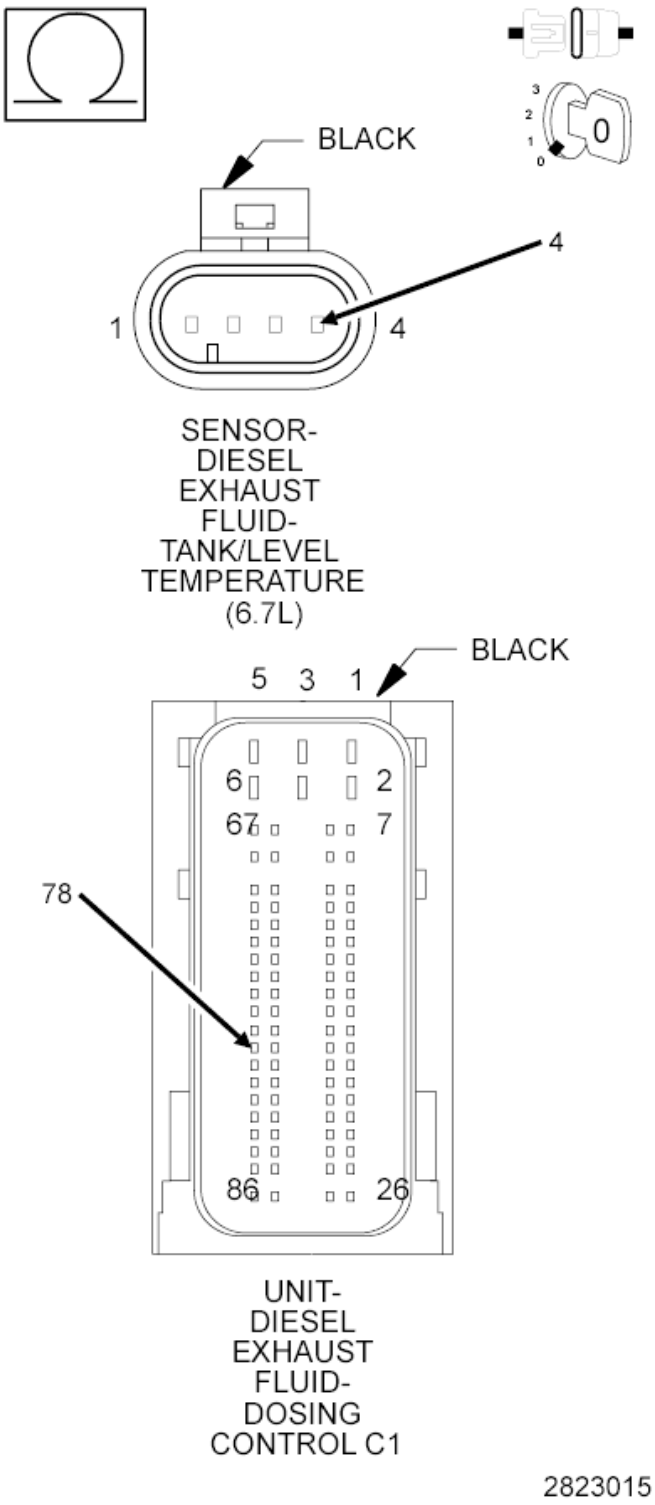

Fig. 72: Checking The DEF Tank Level Temperature Return Circuit For An Open Or High Resistance
Courtesy of CHRYSLER GROUP, LLC

1. Measure the resistance of the (K469) DEF Tank Temperature Sensor Return circuit between the

DEF Tank Level/Temperature Sensor harness connector and the DEF Dosing Control Unit C1 harness connector.

Is the resistance below 5.0 Ohms?

Yes

- Replace the DEF Dosing Control Unit in accordance with the service information. Refer to **UNIT, DIESEL EXHAUST FLUID DOSING CONTROL, REMOVAL** .
- Perform the POWERTRAIN VERIFICATION TEST. Refer to **POWERTRAIN VERIFICATION TEST - 6.7L** .

No

- Repair the (K469) DEF Tank Temperature Sensor Return circuit for an open or high resistance.
- Perform the POWERTRAIN VERIFICATION TEST. Refer to **POWERTRAIN VERIFICATION TEST - 6.7L** .

P205E-(DIESEL EXHAUST FLUID) REDUCTANT TANK TEMPERATURE SENSOR CIRCUIT INTERMITTENT

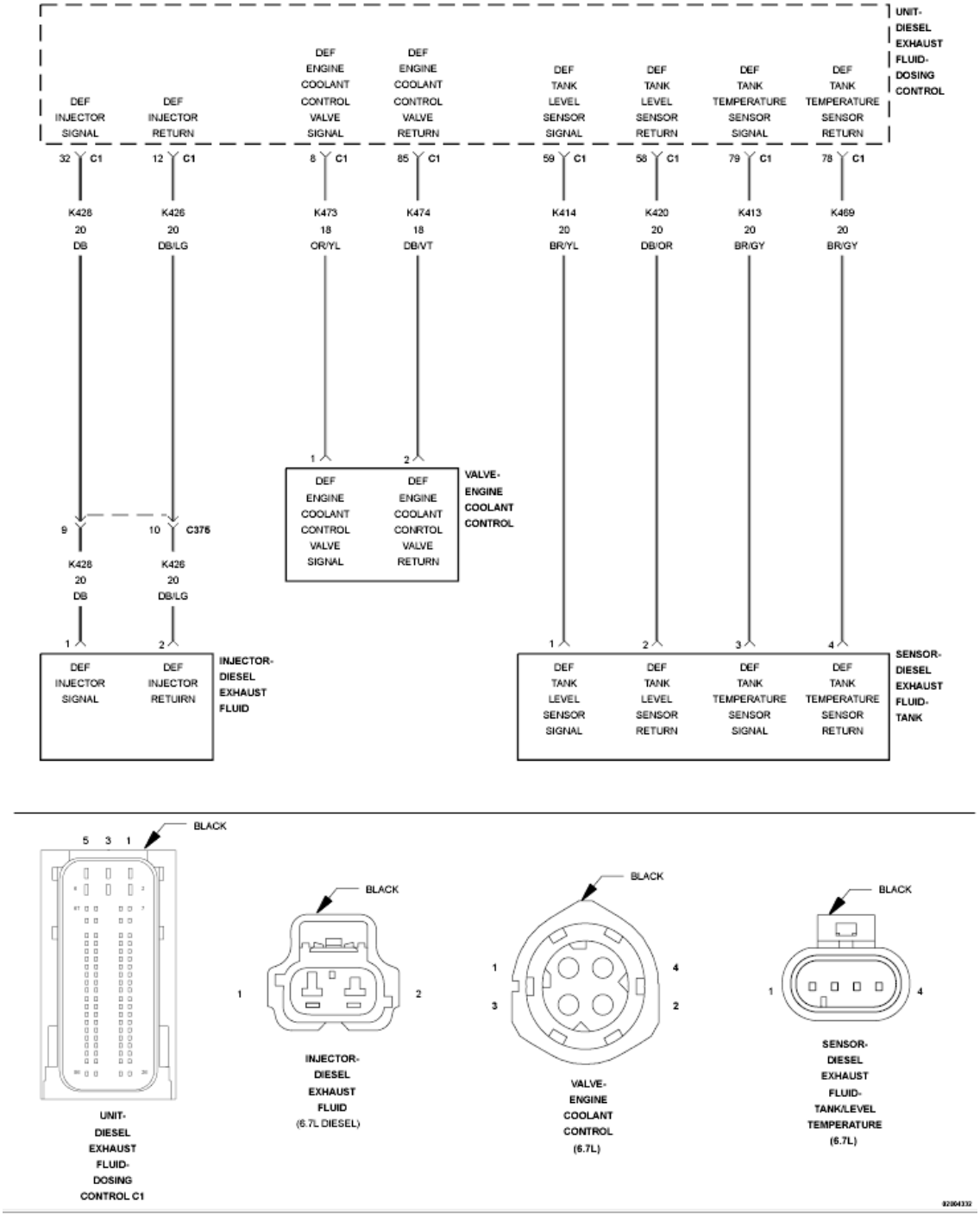

Fig. 73: Diesel Exhaust Fluid Reductant Tank Heater Control Circuit Wiring Diagram
Courtesy of CHRYSLER GROUP, LLC

For a complete wiring diagram, **refer to appropriate SYSTEM WIRING DIAGRAMS article** .

THEORY OF OPERATION

The Diesel Exhaust Fluid (DEF) Tank Level Sensor and Diesel Exhaust Fluid (DEF) Tank Temperature Sensor

are a combination sensor used to measure the level and temperature of the fluid in the DEF Tank. Though combined, the level sensor and the temperature sensor operate independent of each other. Both sensors operate as a two wire 5-Volt sensor. The DEF Tank Level Sensor is a 14 point magnetic reed switch sensor. The DEF Tank Temperature Sensor is a negative temperature coefficient sensor. The DEF Dosing Control Unit will illuminate the MIL lamp via the Powertrain Control Module (PCM) immediately after this diagnostic runs and fails. The DEF Dosing Control Unit will turn off the MIL lamp via the PCM immediately after the diagnostic runs and passes in three consecutive key cycles.

WHEN MONITORED:

The engine must be turned off for a period of eight hours before this monitor will run. This monitor runs when the ignition is turned to the on position after an eight hour cold soak.

SET CONDITION:

At initial key on, the DEF Dosing Control Unit detects an 30°C (86°F) difference between the DEF Tank Temperature Sensor and the DEF Ambient Air Temperature Sensor for a calibrated time.

POSSIBLE CAUSES

Possible Causes
HIGH RESISTANCE IN THE (K413) DIESEL EXHAUST FLUID TANK TEMPERATURE SENSOR SIGNAL CIRCUIT
HIGH RESISTANCE IN THE (K469) DIESEL EXHAUST FLUID TANK TEMPERATURE SENSOR RETURN CIRCUIT
DIESEL EXHAUST FLUID TANK TEMPERATURE SENSOR
ENGINE COOLANT CONTROL VALVE
DIESEL EXHAUST FLUID DOSING CONTROL UNIT

Always perform the Pre-Diagnostic Troubleshooting procedure before proceeding. Refer to PRE-DIAGNOSTIC TROUBLESHOOTING PROCEDURE - 6.7L .

DIAGNOSTIC TEST

1. **ACTIVE DTC**
    1. Ignition on, engine not running.
    2. With the scan tool check for active DTCs.

       Is the DTC active?

       Yes

       - Go To 2.

       No

- Perform the INTERMITTENT CONDITION diagnostic procedure. Refer to **INTERMITTENT CONDITION - 6.7L** .

2. **CHECK FOR HIGH RESISTANCE IN THE (K413) DEF TANK TEMPERATURE SENSOR SIGNAL CIRCUIT**

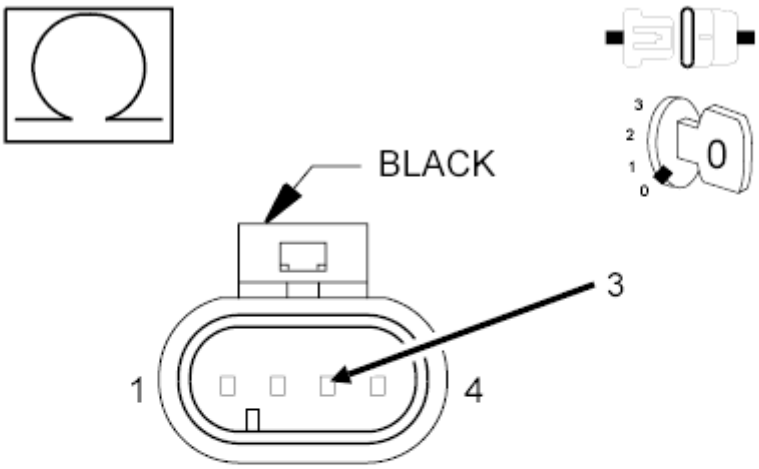

SENSOR-
DIESEL
EXHAUST
FLUID-
TANK/LEVEL
TEMPERATURE
(6.7L)

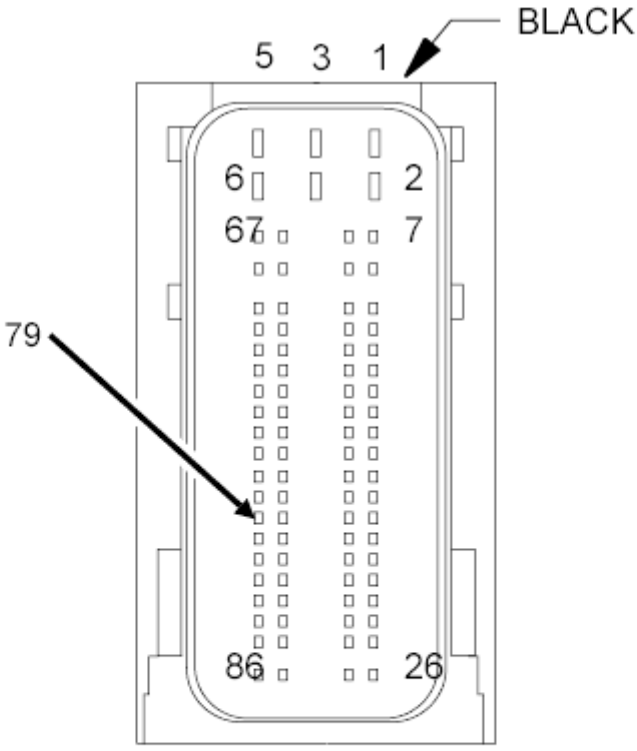

UNIT-
DIESEL
EXHAUST
FLUID-
DOSING

Fig. 74: Checking DEF Tank Temperature Sensor Signal Circuit For An Open Or High
Courtesy of CHRYSLER GROUP, LLC

1. Turn ignition off.
2. Disconnect the DEF Tank Level/Tank Temperature Sensor harness connector.
3. Disconnect the DEF Dosing Control Unit C1 harness connector.
4. Measure the resistance of the (K413) DEF Tank Temperature Sensor Signal circuit between the DEF Tank Level/Temperature Sensor harness connector and the DEF Dosing Control Unit C1 harness connector.

   Is the resistance below 5.0 Ohms?

   Yes

   - Go To 3.

   No

   - Repair the (K413) DEF Tank Temperature Sensor Signal circuit for an open or high resistance.
   - Perform the POWERTRAIN VERIFICATION TEST. Refer to **POWERTRAIN VERIFICATION TEST - 6.7L** .

3. **CHECK FOR HIGH RESISTANCE IN THE (K469) DEF TANK TEMPERATURE SENSOR RETURN CIRCUIT FOR AN OPEN/HIGH RESISTANCE**

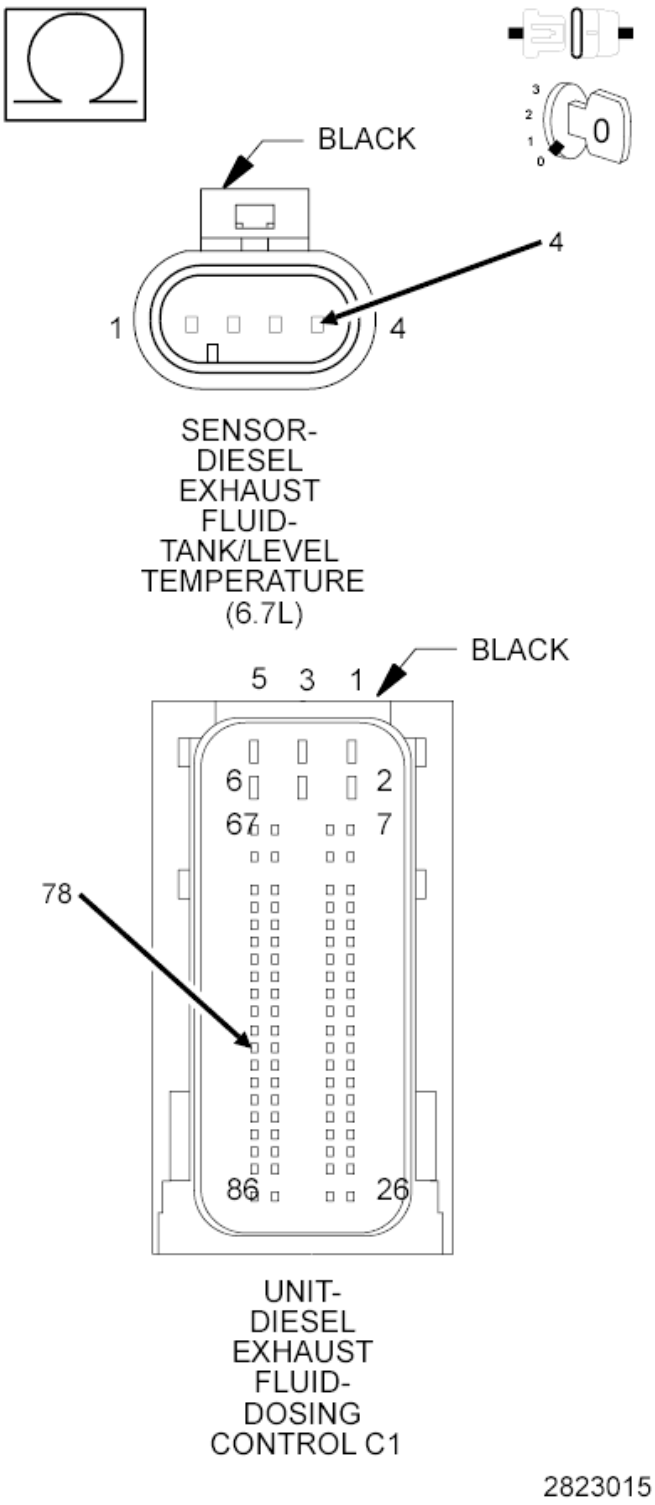

Fig. 75: Checking The DEF Tank Level Temperature Return Circuit For An Open Or High Resistance
Courtesy of CHRYSLER GROUP, LLC

1. Measure the resistance of the (K469) DEF Tank Temperature Sensor Return circuit between the

DEF Tank Level/Temperature Sensor harness connector and the DEF Dosing Control Unit C1 harness connector.

Is the resistance below 5.0 Ohms?

Yes

- Go To 4.

No

- Repair the (K469) DEF Tank Temperature Sensor Return circuit for an open or high resistance.
- Perform the POWERTRAIN VERIFICATION TEST. Refer to **POWERTRAIN VERIFICATION TEST - 6.7L** .

4. **CHECK THE DEF TANK TEMPERATURE SENSOR**
   1. Reconnect the DEF Dosing Control Unit C1 harness connector.
   2. Connect a jumper between the (K413) DEF Tank Temperature Sensor Signal circuit and the (K469) DEF Tank Temperature Sensor Return circuit at the DEF Tank Level/Temperature harness connector.

      NOTE: Be careful not to spread the terminals in the connector.

   3. Turn the ignition on.
   4. Monitor the scan tool for one minute.
   5. Remove the jumper and continue to monitor the scan tool one minute after removing.

      Did the scan tool display P205C active with the jumper in place and P205D with the jumper removed?

      Yes

      - Replace the DEF Tank Level/Temperature Sensor in accordance with the service information. Refer to **SENSOR, DIESEL EXHAUST FLUID LEVEL/TEMPERATURE, REMOVAL** .
      - Perform the POWERTRAIN VERIFICATION TEST. Refer to **POWERTRAIN VERIFICATION TEST - 6.7L** .

      No

      - Replace the DEF Dosing Control Unit in accordance with the service information. Refer to **UNIT, DIESEL EXHAUST FLUID DOSING CONTROL, REMOVAL** .
      - Perform the POWERTRAIN VERIFICATION TEST. Refer to **POWERTRAIN VERIFICATION TEST - 6.7L** .

P207F-REDUCTANT QUALITY PERFORMANCE

For a complete wiring diagram, **refer to appropriate SYSTEM WIRING DIAGRAMS article** .

THEORY OF OPERATION

The Diesel Exhaust Fluid system is used to reduce the amount of NOx being discharged through the exhaust system. The DEF Dosing Control Module receives feedback from the two NOx Sensors in the system. The first NOx Sensor is located before the SCR Catalyst, and the second NOx Sensor is located at the outlet of the SCR Catalyst. The DEF Dosing Control Module compares the two values to determine the conversion efficiency of the SCR Catalyst and the Diesel Exhaust Fluid system. The DEF Dosing Control Unit will illuminate the MIL light via the Powertrain Control Module (PCM) immediately after the diagnostics runs and fails.

WHEN MONITORED:

This monitor runs after the DEF Tank has been refilled. NOx sensor data is gathered over varying engine speeds and loads. When enough data has been gathered, the diagnostic will run, make a pass/fail decision, and begin to gather data again.

SET CONDITION:

The DEF Dosing Control Module detects that the NOx conversion rate across the SCR Catalyst is lower than expected and the tank has been recently refilled.

POSSIBLE CAUSES

Possible Causes
DEGRADED, DILUTED OR INCORRECT DIESEL EXHAUST FLUID
EXHAUST SYSTEM LEAK
DIESEL EXHAUST FLUID DEPOSITS IN DEF INJECTOR DECOMP TUBE
DEFECTIVE SCR CATALYST

Always perform the Pre-Diagnostic Troubleshooting procedure before proceeding. Refer to PRE-DIAGNOSTIC TROUBLESHOOTING PROCEDURE - 6.7L .

DIAGNOSTIC TEST

1. **CHECK THE DIESEL EXHAUST FLUID**

NOTE: Repair any DEF system component DTCs before continuing with this diagnostic procedure.

1. Collect a sample of diesel exhaust fluid from the system.
2. Visually inspect the fluid for signs of contamination or debris.
3. Test the quality of the fluid using litmus paper (supplied by parts) or by using an SPX DEF/UREA Refractometer 94-F-00K-108-456 or equivalent.

NOTE: **The diesel exhaust fluid should register approximately 9 ph with the litmus paper and 32.5 percent using a refractometer.**

Is the diesel exhaust fluid quality within specification and free of debris and contamination?

Yes

- Go To 2.

No

- Drain the diesel exhaust fluid from the tank and fill the system. If the fluid is contaminated, follow the cleaning procedure. Refer to **TANK, DIESEL EXHAUST FLUID, CLEANING** .
- Perform the POWERTRAIN VERIFICATION TEST. Refer to **POWERTRAIN VERIFICATION TEST - 6.7L** .

2. **CHECK THE EXHAUST SYSTEM FOR LEAKS**
   1. Visually inspect the entire exhaust system for signs of a leak.

   Were any exhaust leaks found?

   Yes

   - Perform the appropriate repair.
   - Perform the POWERTRAIN VERIFICATION TEST. Refer to **POWERTRAIN VERIFICATION TEST - 6.7L** .

   No

   - Go To 3.

3. **CHECK THE DEF INJECTOR DECOMP TUBE FOR DEPOSITS**

NOTE: **The diesel exhaust fluid will form hard deposits when exposed to air.**

   1. Remove the DEF Injector from the Decomp Tube. Refer to **INJECTOR, DIESEL EXHAUST FLUID, REMOVAL** .
   2. Visually inspect the Decomp Tube for diesel exhaust fluid deposits.

   Were any deposits found?

   Yes

   - Clean the deposits from the Decomp Tube.
   - Perform the POWERTRAIN VERIFICATION TEST. Refer to **POWERTRAIN VERIFICATION TEST - 6.7L** .

No

- Go To 4.

4. **CHECK THE DEF INJECTOR**
   1. Reconnect the DEF Injector harness connector.
   2. Place the DEF Injector in a container to capture the fluid sprayed.
   3. Turn the ignition on.
   4. With the scan tool, navigate to Systems Tests and actuate the Diesel Exhaust Fluid Doser Pump Override Test.

      NOTE: **This Test will run for six minutes before timing out. The amount of flow may fluctuate through out the test, therefore the test must be allowed to run completely in order for the results to be accurate. The fluid should spray out as a mist. There should be no dripping from the holes in the DEF Injector at any time during the duration of the test procedure.**

   5. Measure the amount of fluid sprayed after the test times out.

      Does the fluid sprayed measure between 85 ml and 115 ml?

      Yes

      - Replace the SCR Catalyst in accordance with the service information.
      - Perform the POWERTRAIN VERIFICATION TEST. Refer to **POWERTRAIN VERIFICATION TEST - 6.7L** .

      No

      - Replace the DEF Injector in accordance with the service information. Refer to **INJECTOR, DIESEL EXHAUST FLUID, REMOVAL** .
      - Perform the POWERTRAIN VERIFICATION TEST. Refer to **POWERTRAIN VERIFICATION TEST - 6.7L** .

P2080-EXHAUST GAS TEMP SENSOR CIRCUIT PERFORMANCE - BANK 1 SENSOR 1

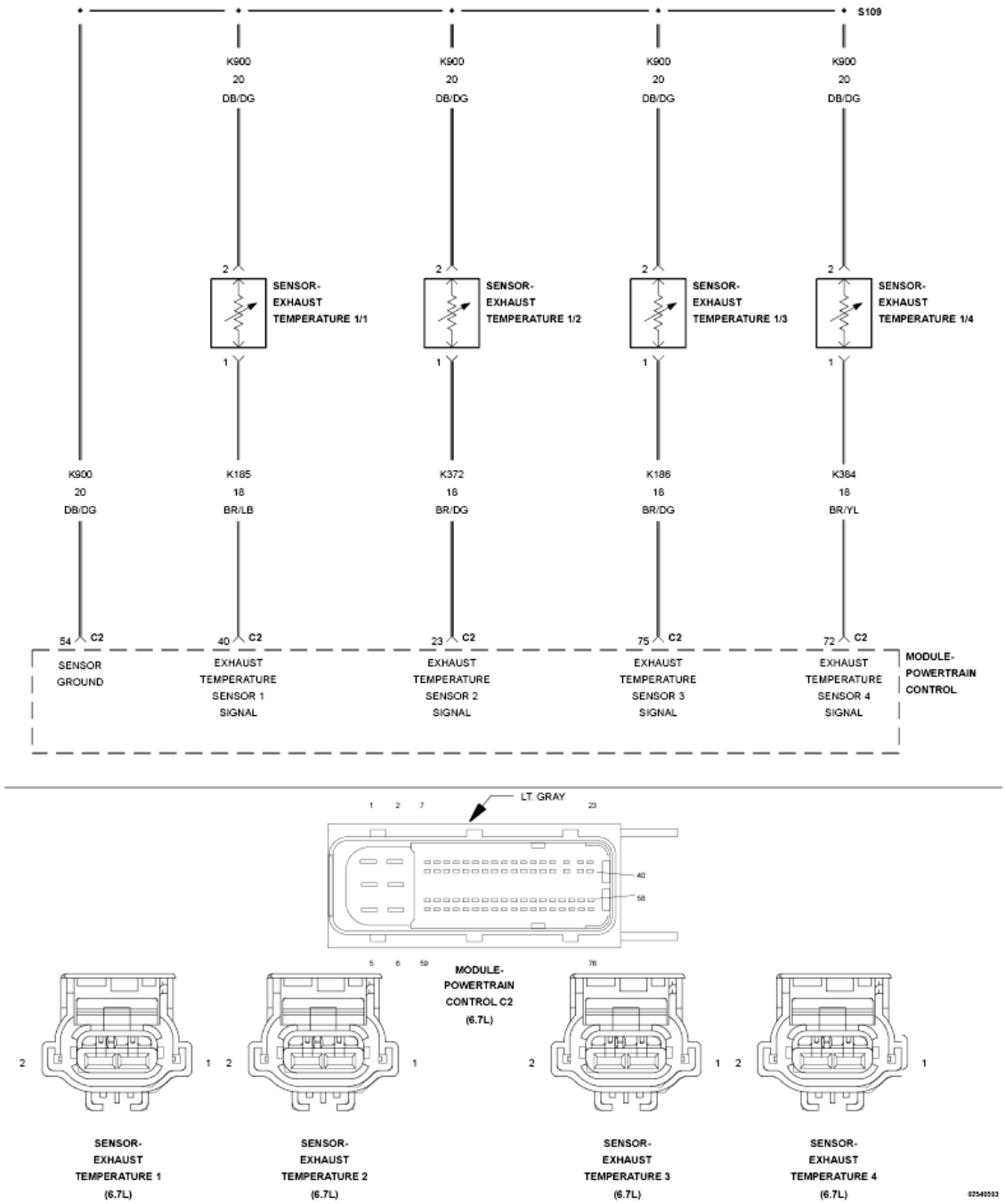

Fig. 76: Exhaust Gas Temperature Sensor Circuit Schematic
Courtesy of CHRYSLER GROUP, LLC

For a complete wiring diagram, **refer to appropriate SYSTEM WIRING DIAGRAMS article** .

THEORY OF OPERATION

The Exhaust Temperature sensors are used by the Powertrain Control Module (PCM) to monitor the engine exhaust temperatures in the aftertreatment system. The Exhaust Temperature sensors are thermistors and change resistance based on the temperature being measured. The PCM provides a 5-Volt reference voltage to the

sensor. The PCM monitors the voltage on the signal pin and converts this to a temperature value. This fault is set by the PCM if it detects that the NOx Absorber Catalyst (NAC)-(DJ/D2) inlet or the Diesel Oxidation Catalyst (DOC)-(DC/DM) inlet temperature is not increasing along with the engine operating temperature after engine start up. The PCM will illuminate the MIL lamp after the diagnostic runs and fails on two consecutive drive cycles. The PCM will turn off the MIL lamp after the diagnostic runs and passes on four consecutive drive cycles.

WHEN MONITORED:

Engine running.

SET CONDITION:

The PCM detects that the NOx Absorber Catalyst (NAC)-(DJ/D2) inlet or the Diesel Oxidation Catalyst (DOC)-(DC/DM) inlet temperature sensor reading is not increasing with engine operating temperature after engine startup.

POSSIBLE CAUSES

Possible Causes
EXHAUST TEMPERATURE SENSOR 1/1
EXHAUST TEMPERATURE SENSOR 1/3
WIRING HARNESS OR CONNECTION

Always perform the Pre-Diagnostic Troubleshooting procedure before proceeding. Refer to PRE-DIAGNOSTIC TROUBLESHOOTING PROCEDURE - 6.7L .

DIAGNOSTIC TEST

1. **OTHER DTCS PRESENT**
    1. Turn the ignition on.
    2. With the scan tool, read DTCs.

    Are either of the Exhaust Temperature Sensor 1/1 Low or High DTCs present?

    Yes

    - Repair the other DTCs before proceeding.
    - Perform the POWERTRAIN VERIFICATION TEST. Refer to **POWERTRAIN VERIFICATION TEST - 6.7L** .

    No

    - Go To 2.
2. **EXHAUST TEMPERATURE**
    1. With the scan tool, read the Exhaust Temperature Sensors to determine the exhaust temperature.

Is the temperature reading above 225°F?

Yes

- Go To 3.

No

- Go To 4.

3. **EXHAUST TEMPERATURE SENSOR 1/1 AND 1/3**
   1. Start the engine.
   2. Raise the engine speed to 2500 RPM for two minutes.

   Do the temperature readings of Exhaust Temperature Sensor 1/1 and Exhaust Temperature Sensor 1/3 change in value at least 5°F?

   Yes

   - Perform the INTERMITTENT CONDITION diagnostic procedure. Refer to **INTERMITTENT CONDITION - 6.7L** .

   No

   - Replace the Exhaust Temperature Sensor that did not change in value by at least 5°F or is not updating.
   - Perform the POWERTRAIN VERIFICATION TEST. Refer to **POWERTRAIN VERIFICATION TEST - 6.7L** .
4. **EXHAUST TEMPERATURE SENSOR 1/1 AND 1/3**
   1. Start the engine and allow it to idle for 10 minutes.
   2. With the scan tool, read the values of Exhaust Temperature Sensor 1/1 and Exhaust Temperature Sensor 1/3.

   Do both temperature sensors read above 150°F and are the values of both temperature sensors updating?

   Yes

   - Perform the INTERMITTENT CONDITION diagnostic procedure. Refer to **INTERMITTENT CONDITION - 6.7L** .

   No

   - Replace the Exhaust Temperature Sensor that is not above 150°F or is not updating on the scan tool.
   - Perform the POWERTRAIN VERIFICATION TEST. Refer to **POWERTRAIN**

VERIFICATION TEST - 6.7L .

P2084-EXHAUST GAS TEMP SENSOR CIRCUIT PERFORMANCE - BANK 1 SENSOR 2

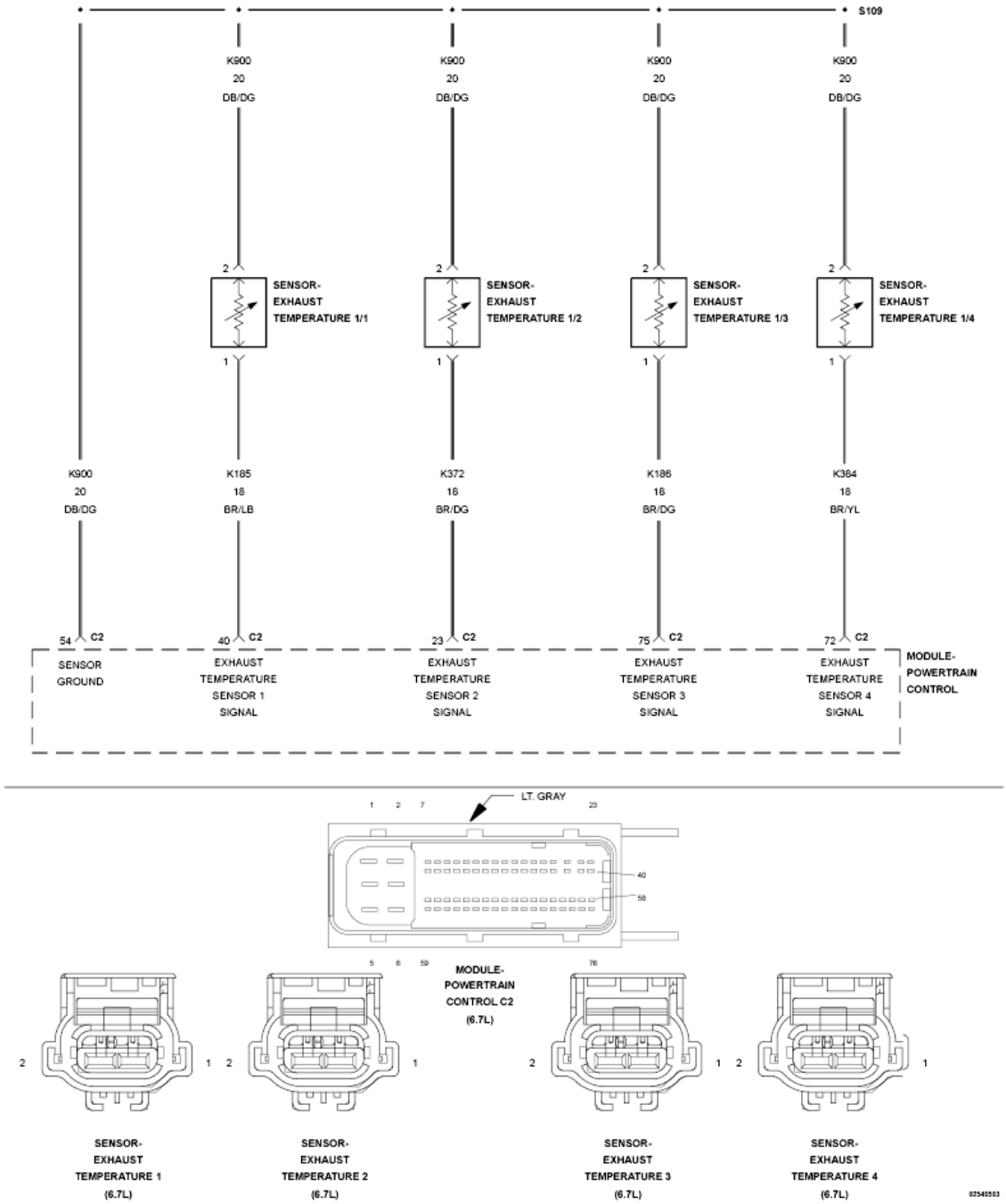

Fig. 77: Exhaust Gas Temperature Sensor Circuit Schematic
Courtesy of CHRYSLER GROUP, LLC

For a complete wiring diagram, **refer to appropriate SYSTEM WIRING DIAGRAMS article** .

THEORY OF OPERATION

The Exhaust Temperature Sensors are used by the Powertrain Control Module (PCM) to monitor the engine exhaust temperatures in the aftertreatment system. The Exhaust Temperature Sensors are thermistors and change resistance based on the temperature being measured. The PCM provides a 5-Volt reference voltage to the sensor. The PCM monitors the voltage on the signal pin and converts this to a temperature value. This fault is set by the PCM if it detects that the Aftertreatment Diesel Particulate Filter inlet temperature sensor reading is not increasing with engine operating temperature after engine startup. The PCM illuminates the MIL lamp immediately when the diagnostic runs and fails. The PCM will turn off the MIL lamp after the diagnostic runs and passes on four consecutive drive cycles. The PCM will disable active regeneration mode.

WHEN MONITORED:

Engine running.

SET CONDITION:

The PCM detects that the Exhaust Temperature Sensor 1/2 reading is not increasing with engine operating temperature after engine startup.

POSSIBLE CAUSES

Possible Causes
EXHAUST TEMPERATURE SENSOR 1/2
EXHAUST TEMPERATURE SENSOR 1/3
WIRING HARNESS OR CONNECTION

Always perform the Pre-Diagnostic Troubleshooting procedure before proceeding. Refer to PRE-DIAGNOSTIC TROUBLESHOOTING PROCEDURE - 6.7L .

DIAGNOSTIC TEST

1. **OTHER DTCS PRESENT**
    1. Turn the ignition on.
    2. With the scan tool, read DTCs.

       Do you have any other DTC for the Exhaust Temperature Sensors?

       Yes

       - Repair the other DTCs before proceeding.
       - Perform the POWERTRAIN VERIFICATION TEST. Refer to **POWERTRAIN VERIFICATION TEST - 6.7L** .

       No

       - Go To 2.
2. **EXHAUST TEMPERATURE**

1. With the scan tool, read the Exhaust Temperature Sensors to determine the exhaust temperature.

   Is the temperature reading above 225°F?

   Yes

   - Go To 3.

   No

   - Go To 4.

3. **EXHAUST TEMPERATURE SENSOR 1/2 AND 1/3**
   1. Start the engine.
   2. Raise the engine speed to 2500 RPM's for two minutes.

      Do the temperature readings of Exhaust Temperature Sensor 1/2 and Exhaust Temperature Sensor 1/3 change in value at least 5°F?

      Yes

      - Perform the INTERMITTENT CONDITION diagnostic procedure. Refer to **INTERMITTENT CONDITION - 6.7L** .

      No

      - Replace the Exhaust Temperature Sensor that did not change in value by at least 5°F or is not updating.
      - Perform the POWERTRAIN VERIFICATION TEST. Refer to **POWERTRAIN VERIFICATION TEST - 6.7L** .

4. **EXHAUST TEMPERATURE SENSOR 1/2 AND 1/3**
   1. Start the engine and allow it to idle for 10 minutes.
   2. With the scan tool, read the values of Exhaust Temperature Sensor 1/2 and Exhaust Temperature Sensor 1/3.

      Do both temperature sensors read above 150°F and are the values of both temperature sensors updating?

      Yes

      - Perform the INTERMITTENT CONDITION diagnostic procedure. Refer to **INTERMITTENT CONDITION - 6.7L** .

      No

      - Replace the Exhaust Temperature Sensor that is not above 150°F or is not updating on the

scan tool.

- Perform the POWERTRAIN VERIFICATION TEST. Refer to **POWERTRAIN VERIFICATION TEST - 6.7L** .

P208A-(DIESEL EXHAUST FLUID) REDUCTANT PUMP CONTROL CIRCUIT OPEN

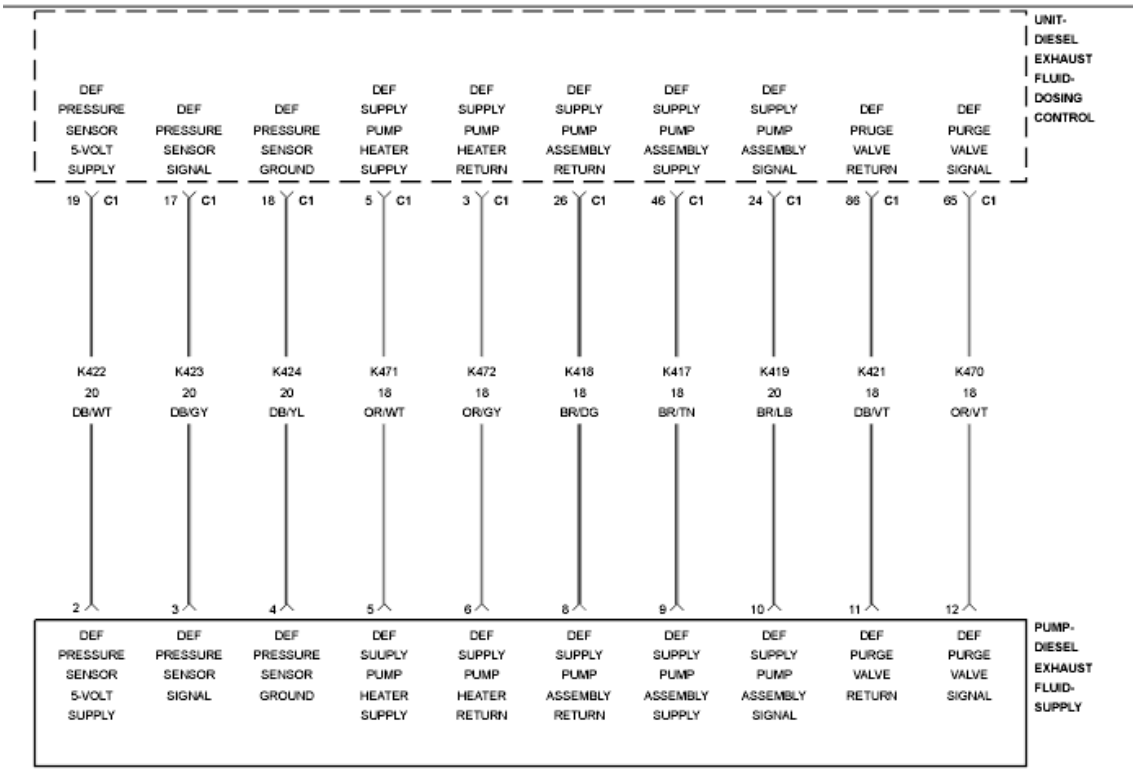

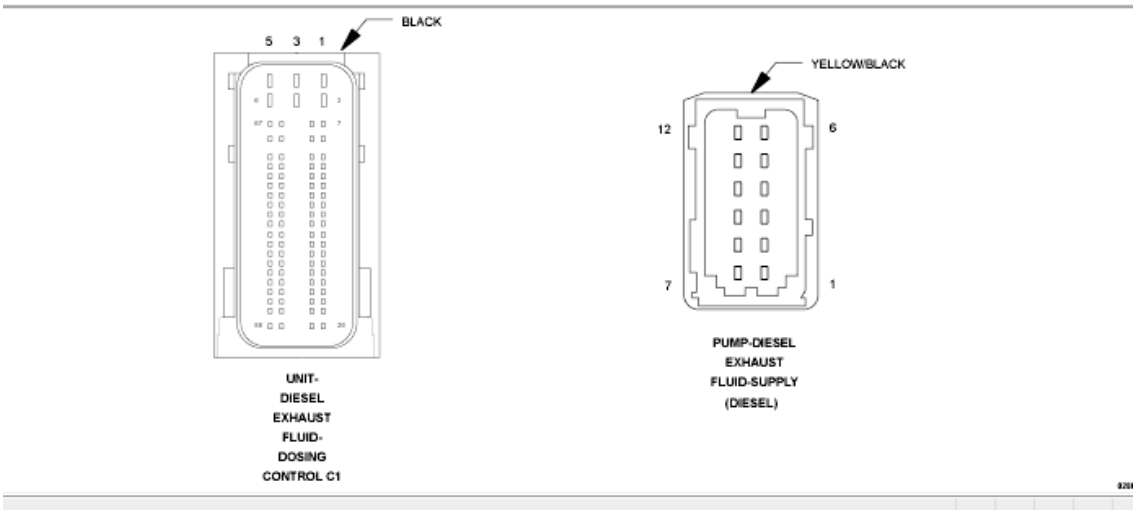

Fig. 78: Diesel Exhaust Fluid (DEF) Dosing Control Unit Wiring Diagram
Courtesy of CHRYSLER GROUP, LLC

For a complete wiring diagram, **refer to appropriate SYSTEM WIRING DIAGRAMS article** .

THEORY OF OPERATION

The Diesel Exhaust Fluid (DEF) Supply Pump Assembly has many functions. It's primary purpose is to draw fluid from the tank and build adequate system pressure for dosing into the exhaust. The DEF Dosing Control Unit provides the 12 Volt supply and ground for the pump. The DEF Dosing Control Unit also provides a Pulse Width Modulated (PWM) signal to the DEF Supply Pump Assembly to control the speed and output of the pump. The DEF Dosing Control Unit will illuminate the MIL light via the Powertrain Control Module (PCM) immediately after the diagnostics runs and fails and diesel exhaust fluid injection into the aftertreatment system is disabled. The DEF Dosing Control Unit will turn off the MIL light via the PCM when the monitor runs and passes in three consecutive key cycles.

WHEN MONITORED:

Continuously with the ignition on.

SET CONDITION:

The DEF Dosing Control Unit detects that the DEF Supply Pump circuit is open.

POSSIBLE CAUSES

Possible Causes
(K417) DEF SUPPLY PUMP ASSEMBLY SUPPLY CIRCUIT OPEN/HIGH RESISTANCE
(K418) DEF SUPPLY PUMP ASSEMBLY RETURN CIRCUIT OPEN/HIGH RESISTANCE
(K419) DEF SUPPLY PUMP ASSEMBLY SIGNAL CIRCUIT OPEN/HIGH RESISTANCE
DEF SUPPLY PUMP ASSEMBLY
DEF DOSING CONTROL UNIT

Always perform the Pre-Diagnostic Troubleshooting procedure before proceeding. Refer to PRE-DIAGNOSTIC TROUBLESHOOTING PROCEDURE - 6.7L .

DIAGNOSTIC TEST

1. **ACTIVE DTC**
    1. Turn the ignition on, engine not running.
    2. With the scan tool, navigate to Systems Tests and actuate the Diesel Exhaust Fluid Doser Pump Override Test.
    3. With the scan tool, View DTCs.

    Is the DTC Active?

    Yes

    - Go To 3.

    No

- Perform the INTERMITTENT CONDITION diagnostic procedure. Refer to **INTERMITTENT CONDITION - 6.7L** .

2. **CHECK THE DEF SUPPLY PUMP ASSEMBLY**
   1. Turn the ignition off.
   2. Disconnect the DEF Supply Pump Assembly harness connector.
   3. Connect a jumper between the (K417) DEF Supply Pump Assembly Supply circuit and the (K419) DEF Supply Pump Assembly Signal circuit at the DEF Supply Pump Assembly harness connector.

      NOTE: Be careful not to spread the terminals.

   4. Turn the ignition on.
   5. With a scan tool, View DTCs.

      Did DTC P208D become active and DTC P208A change to stored with the jumper in place?

      Yes

      - Replace the DEF Supply Pump Assembly in accordance with the service information. Refer to **ASSEMBLY, DIESEL EXHAUST FLUID PUMP, REMOVAL** .
      - Perform the POWERTRAIN VERIFICATION TEST. Refer to **POWERTRAIN VERIFICATION TEST - 6.7L** .

      No

      - Go To 3.

3. **CHECK THE (K417) DEF SUPPLY PUMP ASSEMBLY SUPPLY CIRCUIT FOR AN OPEN/HIGH RESISTANCE**

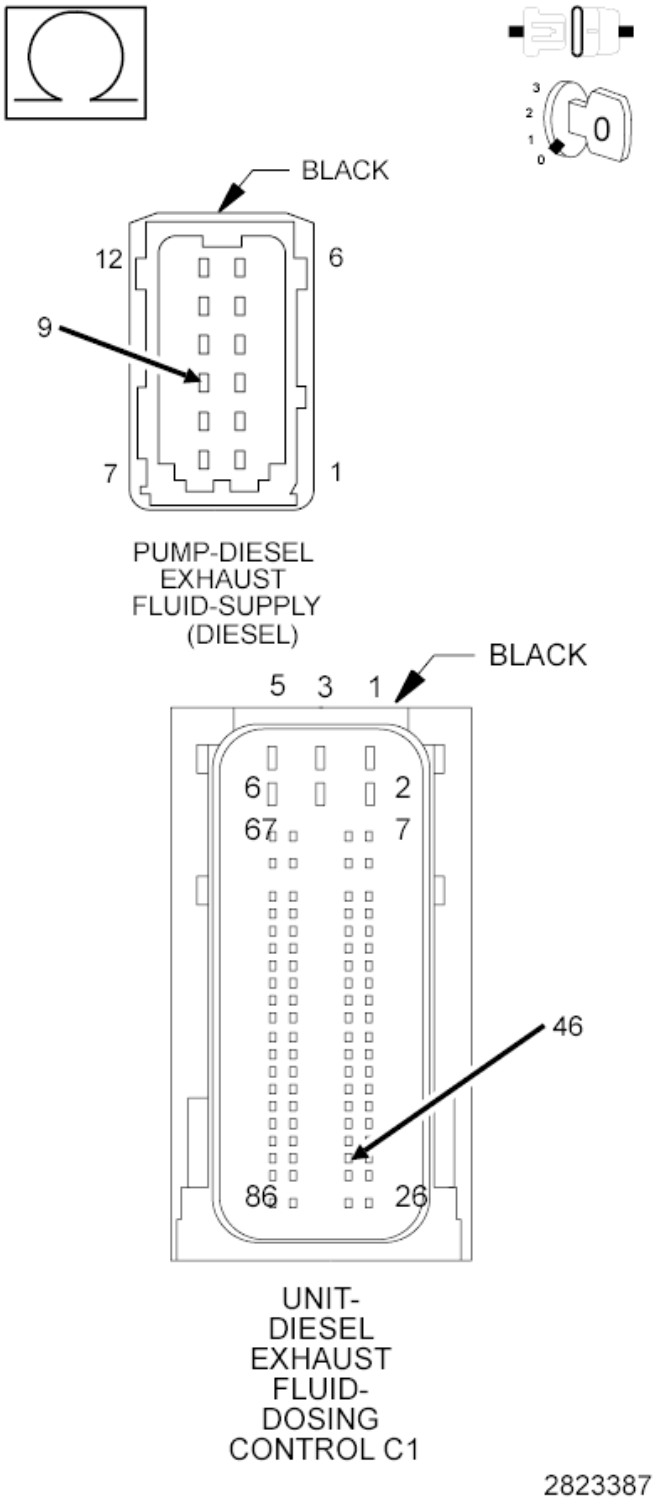

Fig. 79: Checking DEF Supply Pump Assembly Supply Circuit For An Open Or High Resistance
Courtesy of CHRYSLER GROUP, LLC

1. Turn the ignition off.
2. Disconnect the DEF Dosing Control Unit C1 harness connector.

3. Measure the resistance of the (K417) DEF Supply Pump Assembly Supply circuit between the DEF Supply Pump Assembly harness connector and the DEF Dosing Control Unit C1 harness connector.

   Is the resistance below 5.0 Ohms?

   Yes

   - Go To 4.

   No

   - Repair the (K417) DEF Supply Pump Assembly Supply circuit for an open or high resistance.
   - Perform the POWERTRAIN VERIFICATION TEST. Refer to **POWERTRAIN VERIFICATION TEST - 6.7L** .

4. **CHECK THE (K418) DEF SUPPLY PUMP ASSEMBLY RETURN CIRCUIT FOR AN OPEN/HIGH RESISTANCE**

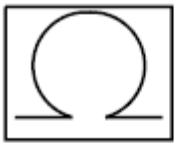

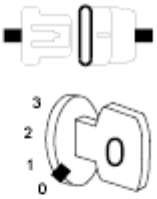

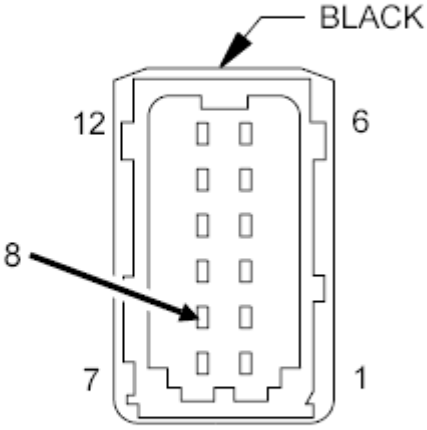

PUMP-DIESEL EXHAUST FLUID-SUPPLY (DIESEL)

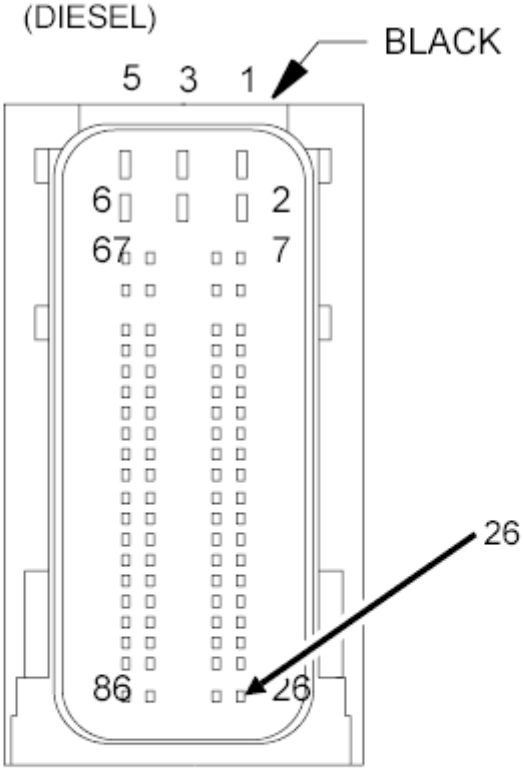

UNIT-DIESEL EXHAUST FLUID-DOSING

Fig. 80: Checking DEF Supply Pump Assembly Return Circuit For An Open Or High Resistance
Courtesy of CHRYSLER GROUP, LLC

1. Measure the resistance of the (K418) DEF Supply Pump Assembly Return circuit between the DEF Supply Pump Assembly harness connector and the DEF Dosing Control Unit C1 harness connector.

   Is the resistance below 5.0 Ohms?

   Yes

   - Go To 5.

   No

   - Repair the (K418) DEF Supply Pump Assembly Return circuit for an open or high resistance.
   - Perform the POWERTRAIN VERIFICATION TEST. Refer to **POWERTRAIN VERIFICATION TEST - 6.7L** .

5. **CHECK THE (K419) DEF SUPPLY PUMP ASSEMBLY SIGNAL CIRCUIT FOR AN OPEN/HIGH RESISTANCE**

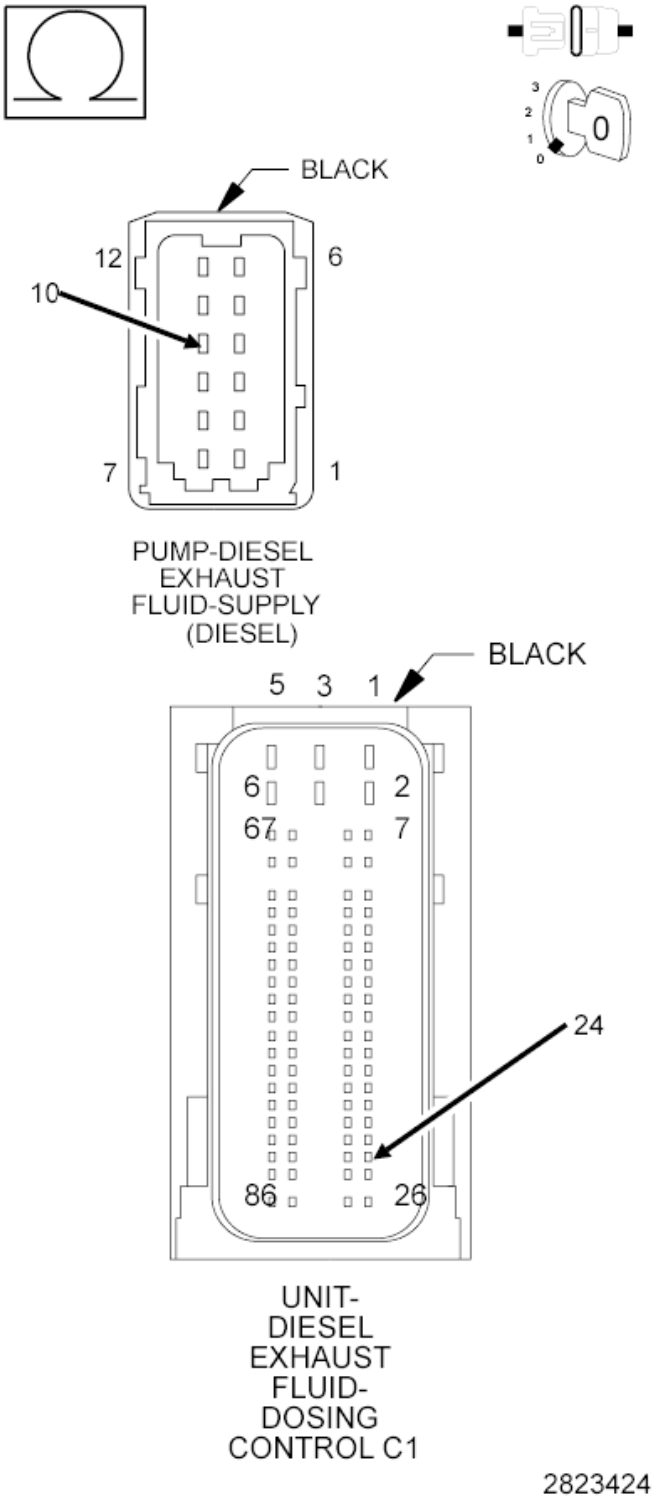

Fig. 81: Checking The DEF Supply Pump Assembly Signal Circuit For An Open Or High Resistance
Courtesy of CHRYSLER GROUP, LLC

1. Measure the resistance of the (K419) DEF Supply Pump Assembly Signal circuit between the DEF

Supply Pump Assembly harness connector and the DEF Dosing Control Unit C1 harness connector.

Is the resistance below 5.0 Ohms?

Yes

- Replace the DEF Dosing Control Unit in accordance with the service information. Refer to **UNIT, DIESEL EXHAUST FLUID DOSING CONTROL, REMOVAL** .
- Perform the POWERTRAIN VERIFICATION TEST. Refer to **POWERTRAIN VERIFICATION TEST - 6.7L** .

No

- Repair the (K419) DEF Supply Pump Assembly Signal circuit for an open or high resistance.
- Perform the POWERTRAIN VERIFICATION TEST. Refer to **POWERTRAIN VERIFICATION TEST - 6.7L** .

P208B-(DIESEL EXHAUST FLUID) REDUCTANT PUMP PERFORMANCE

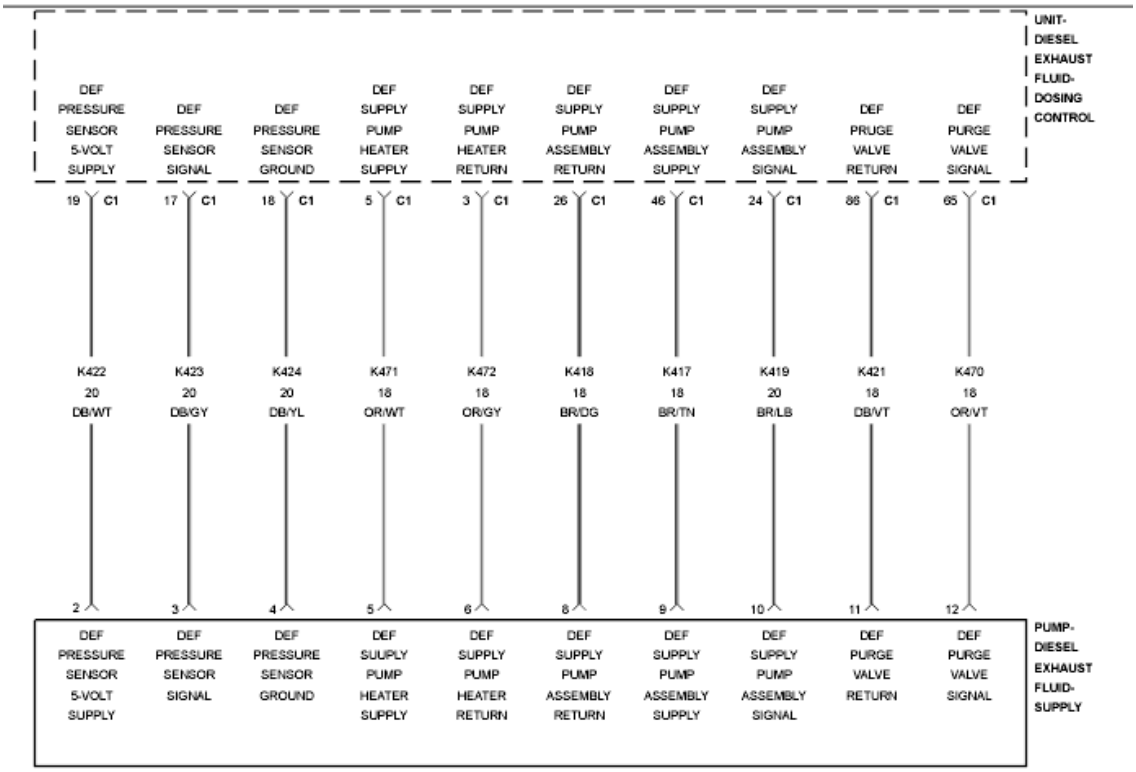

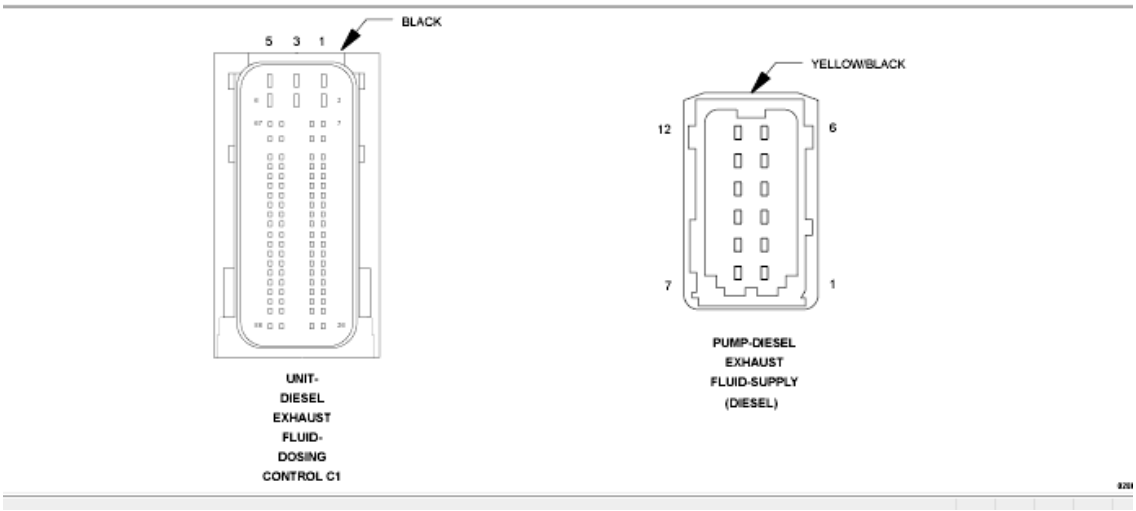

Fig. 82: Diesel Exhaust Fluid (DEF) Dosing Control Unit Wiring Diagram
Courtesy of CHRYSLER GROUP, LLC

For a complete wiring diagram, **refer to appropriate SYSTEM WIRING DIAGRAMS article** .

THEORY OF OPERATION

When the DEF Dosing Control Unit is in pressure control mode, it provides a Pulse Width Modulated (PWM) signal to turn on the DEF Supply Pump Assembly to refill the lines. As the lines fill, the pressure builds to the set point. When the pressure reaches the set point, the DEF Dosing Control Unit turns on the DEF Injector to bleed air out of the Pressure Line. Each time the injector is turned off, the DEF Dosing Control Unit the amount of time it takes for the pressure to rise back to the set point to determine when all of the air is bled out of the line. The DEF Dosing Control Unit will illuminate the MIL light via the PCM immediately after the diagnostics runs and fails and diesel exhaust fluid injection into the aftertreatment system is disabled. The DEF Dosing Control Unit will turn off the MIL light via the PCM when the monitor runs and passes in three consecutive key cycles.

WHEN MONITORED:

At initial key on, and when dosing is commanded on.

SET CONDITION:

There are two conditions that will set this DTC. The first is if the DEF Supply Pump Assembly is not able to communicate it's internal temperature to the DEF Dosing Control Unit at key on. The second is detected at the end of the prime sequence. When the DEF Supply Pump can build and maintain 130 psi (9 bar), the DEF Dosing Control Unit will command the DEF Injector to open and looks for a pressure drop in the system. If the pressure drop does not occur, the DEF Dosing Control Unit assumes there is a blockage in the DEF Pressure Line or DEF Injector nozzle. If the DEF Dosing Control Unit detects a blockage after ten attempts, a DTC is set and diesel exhaust fluid injection into the aftertreatment system is disabled.

POSSIBLE CAUSES

Possible Causes
HIGH RESISTANCE IN THE (K417) DEF SUPPLY PUMP ASSEMBLY SUPPLY CIRCUIT
HIGH RESISTANCE IN THE (K418) DEF SUPPLY PUMP ASSEMBLY RETURN CIRCUIT
HIGH RESISTANCE IN THE (K419) DEF SUPPLY PUMP ASSEMBLY SIGNAL CIRCUIT
DEF PRESSURE LINE BLOCKED OR RESTRICTED
DEF SUPPLY PUMP ASSEMBLY BLOCKED OR RESTRICTED
DEF SUPPLY PUMP ASSEMBLY

Always perform the Pre-Diagnostic Troubleshooting procedure before proceeding. Refer to PRE-DIAGNOSTIC TROUBLESHOOTING PROCEDURE - 6.7L .

DIAGNOSTIC TEST

1. **ACTIVE DTC**

   NOTE: Check the fluid level in the DEF Tank before proceeding with this test procedure.

   1. Turn the ignition on.

2. With the scan tool, navigate to Systems Tests and actuate the Diesel Exhaust Fluid Doser Pump Override Test.
3. With the scan tool, View DTCs.

   Is the DTC active?

   Yes

   - Go To 2.

   No

   - Perform the INTERMITTENT CONDITION diagnostic procedure. Refer to **INTERMITTENT CONDITION - 6.7L** .

2. **CHECK THE DEF SUPPLY LINE**
   1. Stop actuation of the Diesel Exhaust Fluid Doser Pump Override Test.
   2. Turn the ignition off.
   3. Disconnect the DEF Pressure Line.
   4. Check the DEF Pressure Line for a restriction.
   5. Inspect the DEF Supply Pump Assembly Outlet fitting and the DEF Injector connector and nozzle for signs of crystallization.

      Is the DEF Pressure Line, DEF Supply Pump Assembly outlet fitting, and DEF Injector free of obstructions?

      Yes

      - Go To 2.

      No

      - Clean the obstruction from the system or replace the blocked component if unable to clear obstruction.
      - Perform the POWERTRAIN VERIFICATION TEST. Refer to **POWERTRAIN VERIFICATION TEST - 6.7L** .

3. **CHECK THE (K417) DEF SUPPLY PUMP ASSEMBLY SUPPLY CIRCUIT FOR HIGH RESISTANCE**

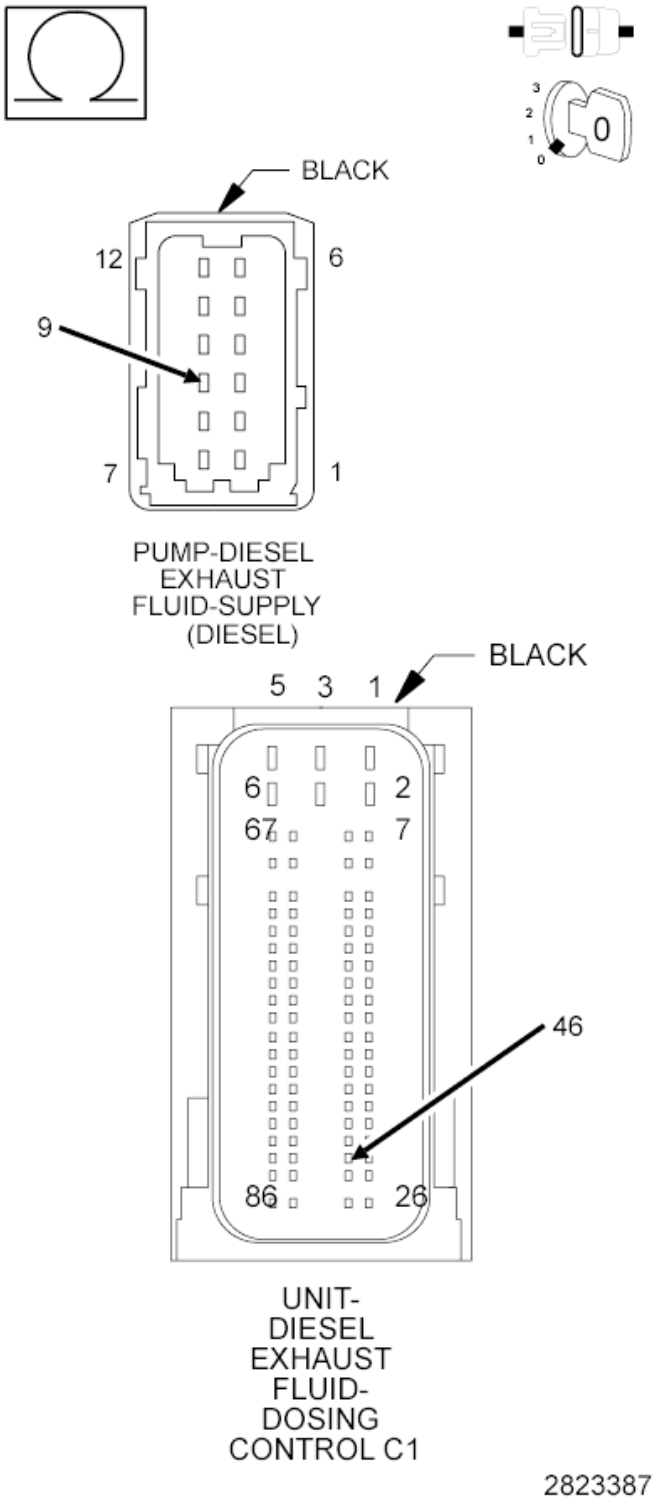

Fig. 83: Checking DEF Supply Pump Assembly Supply Circuit For An Open Or High Resistance
Courtesy of CHRYSLER GROUP, LLC

1. Disconnect the DEF Supply Pump Assembly harness connector.
2. Disconnect the DEF Dosing Control Unit C1 harness connector.

3. Measure the resistance of the (K417) DEF Supply Pump Assembly Supply circuit between the DEF Supply Pump Assembly harness connector and the DEF Dosing Control Unit C1 harness connector.

   Is the resistance below 5.0 Ohms?

   Yes

   - Go To 4.

   No

   - Repair the (K417) DEF Supply Pump Assembly Supply circuit for an open or high resistance.
   - Perform the POWERTRAIN VERIFICATION TEST. Refer to **POWERTRAIN VERIFICATION TEST - 6.7L** .

4. **CHECK THE (K418) DEF SUPPLY PUMP ASSEMBLY RETURN CIRCUIT FOR HIGH RESISTANCE**

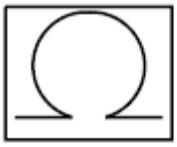

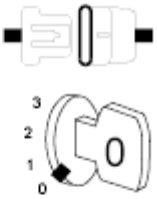

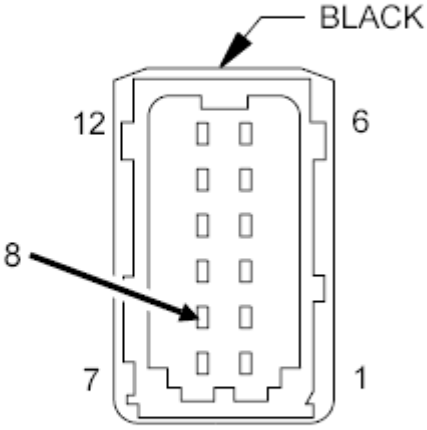

PUMP-DIESEL EXHAUST FLUID-SUPPLY (DIESEL)

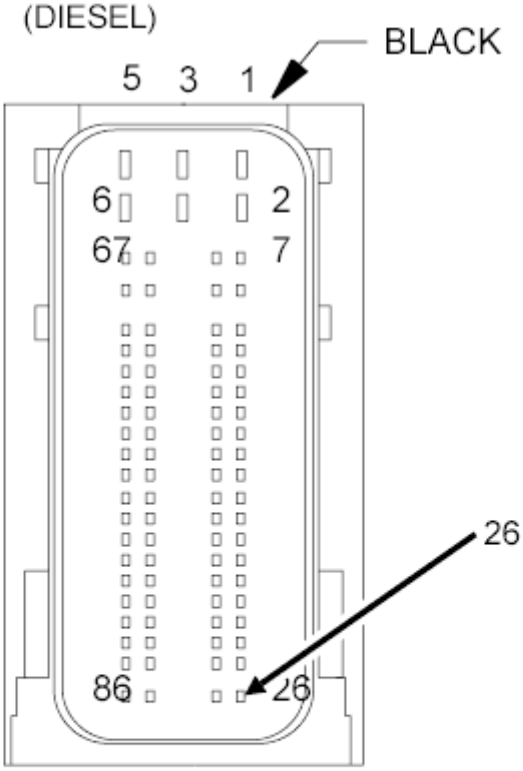

UNIT-DIESEL EXHAUST FLUID-DOSING

Fig. 84: Checking DEF Supply Pump Assembly Return Circuit For An Open Or High Resistance
Courtesy of CHRYSLER GROUP, LLC

1. Measure the resistance of the (K418) DEF Supply Pump Assembly Return circuit between the DEF Supply Pump Assembly harness connector and the DEF Dosing Control Unit C1 harness connector.

   Is the resistance below 5.0 Ohms?

   Yes

   - Go To 5.

   No

   - Repair the (K418) DEF Supply Pump Assembly Return circuit for an open or high resistance.
   - Perform the POWERTRAIN VERIFICATION TEST. Refer to **POWERTRAIN VERIFICATION TEST - 6.7L** .

5. **CHECK THE (K419) DEF SUPPLY PUMP ASSEMBLY SIGNAL CIRCUIT FOR HIGH RESISTANCE**

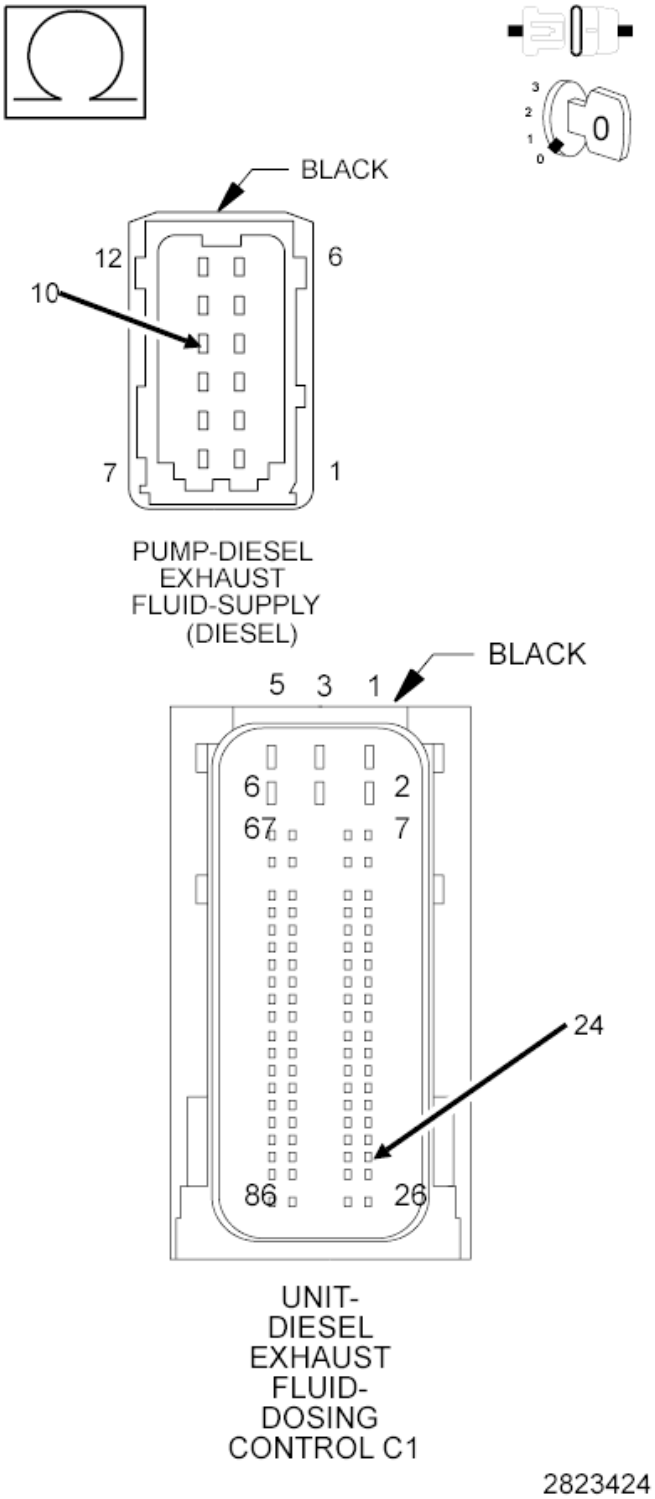

Fig. 85: Checking The DEF Supply Pump Assembly Signal Circuit For An Open Or High Resistance
Courtesy of CHRYSLER GROUP, LLC

1. Measure the resistance of the (K419) DEF Supply Pump Assembly Signal circuit between the DEF

Supply Pump Assembly harness connector and the DEF Dosing Control Unit C1 harness connector.

Is the resistance below 5.0 Ohms?

Yes

- Replace the DEF Supply Pump Assembly in accordance with the service information. Refer to **ASSEMBLY, DIESEL EXHAUST FLUID PUMP, REMOVAL** .
- Perform the POWERTRAIN VERIFICATION TEST. Refer to **POWERTRAIN VERIFICATION TEST - 6.7L** .

No

- Repair the (K419) DEF Supply Pump Assembly Signal circuit for an open or high resistance.
- Perform the POWERTRAIN VERIFICATION TEST. Refer to **POWERTRAIN VERIFICATION TEST - 6.7L** .

P208C-(DIESEL EXHAUST FLUID) REDUCTANT PUMP CONTROL CIRCUIT LOW

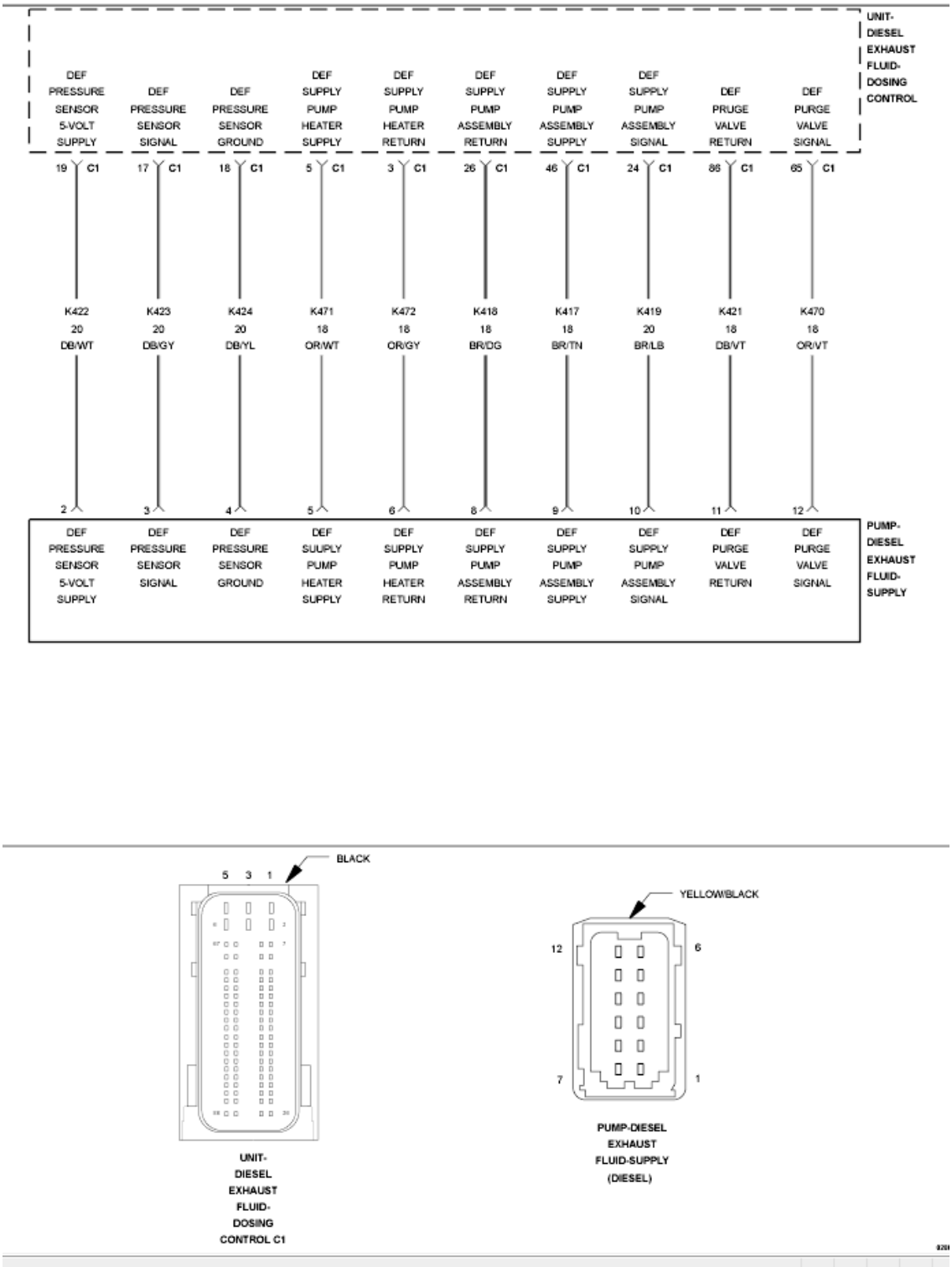

Fig. 86: Diesel Exhaust Fluid (DEF) Dosing Control Unit Wiring Diagram
Courtesy of CHRYSLER GROUP, LLC

For a complete wiring diagram, **refer to appropriate SYSTEM WIRING DIAGRAMS article** .

THEORY OF OPERATION

The Diesel Exhaust Fluid (DEF) Supply Pump Assembly has many functions. It's primary purpose is to draw fluid from the tank and build adequate system pressure for dosing into the exhaust. The DEF Dosing Control Unit provides the 12 Volt supply and ground for the pump. The DEF Dosing Control Unit also provides a Pulse Width Modulated (PWM) signal to the DEF Supply Pump Assembly to control the speed and output of the pump. The DEF Dosing Control Unit will illuminate the MIL light via the Powertrain Control Module (PCM) immediately after the diagnostics runs and fails and diesel exhaust fluid injection into the aftertreatment system is disabled. The DEF Dosing Control Unit will turn off the MIL light via the PCM when the monitor runs and passes in three consecutive key cycles.

WHEN MONITORED:

Continuously with the ignition on.

SET CONDITION:

The DEF Dosing Control Unit detects that the DEF Supply Pump Assembly circuit is below a calibrated value.

POSSIBLE CAUSES

Possible Causes
(K417) DEF SUPPLY PUMP ASSEMBLY SUPPLY CIRCUIT SHORTED TO GROUND
(K418) DEF SUPPLY PUMP ASSEMBLY RETURN CIRCUIT SHORTED TO GROUND
(K419) DEF SUPPLY PUMP ASSEMBLY SIGNAL CIRCUIT SHORTED TO GROUND
DEF SUPPLY PUMP ASSEMBLY
DEF DOSING CONTROL UNIT

Always perform the Pre-Diagnostic Troubleshooting procedure before proceeding. Refer to PRE-DIAGNOSTIC TROUBLESHOOTING PROCEDURE - 6.7L .

DIAGNOSTIC TEST

1. **ACTIVE DTC**
    1. Turn the ignition on, engine not running.
    2. With the scan tool, navigate to Systems Tests and actuate the Diesel Exhaust Fluid Doser Pump Override Test.
    3. With the scan tool, View DTCs.

    Is the DTC Active?

    Yes

    - Go To 2.

    No

- Perform the INTERMITTENT CONDITION diagnostic procedure. Refer to **INTERMITTENT CONDITION - 6.7L** .

2. **CHECK THE (K417) DEF SUPPLY PUMP ASSEMBLY SUPPLY CIRCUIT FOR A SHORT TO GROUND**

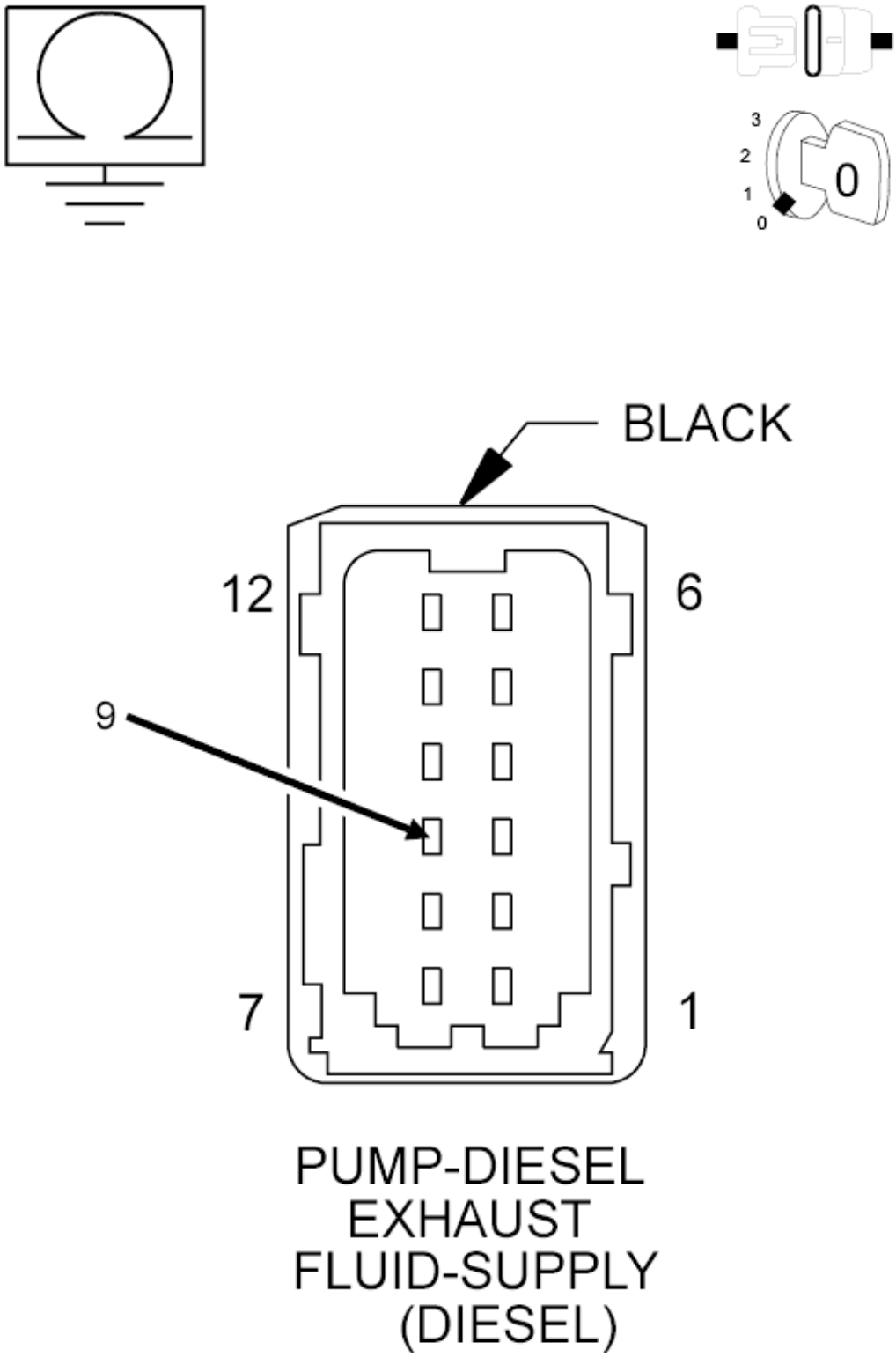

Fig. 87: Checking DEF Supply Pump Assembly Supply Circuit For A Short To Ground

1. Turn the ignition off.
2. Disconnect the DEF Supply Pump Assembly harness connector.
3. Disconnect the DEF Dosing Control Unit C1 harness connector.
4. Measure the resistance between ground and the (K417) DEF Supply Pump Assembly Supply circuit at the DEF Supply Pump Assembly harness connector.

   Is the resistance above 10k Ohms?

   Yes

   - Go To 3.

   No

   - Repair the (K417) DEF Supply Pump Assembly Supply circuit for a short to ground.
   - Perform the POWERTRAIN VERIFICATION TEST. Refer to **POWERTRAIN VERIFICATION TEST - 6.7L** .

3. **CHECK THE (K418) DEF SUPPLY PUMP ASSEMBLY RETURN CIRCUIT FOR A SHORT TO GROUND**

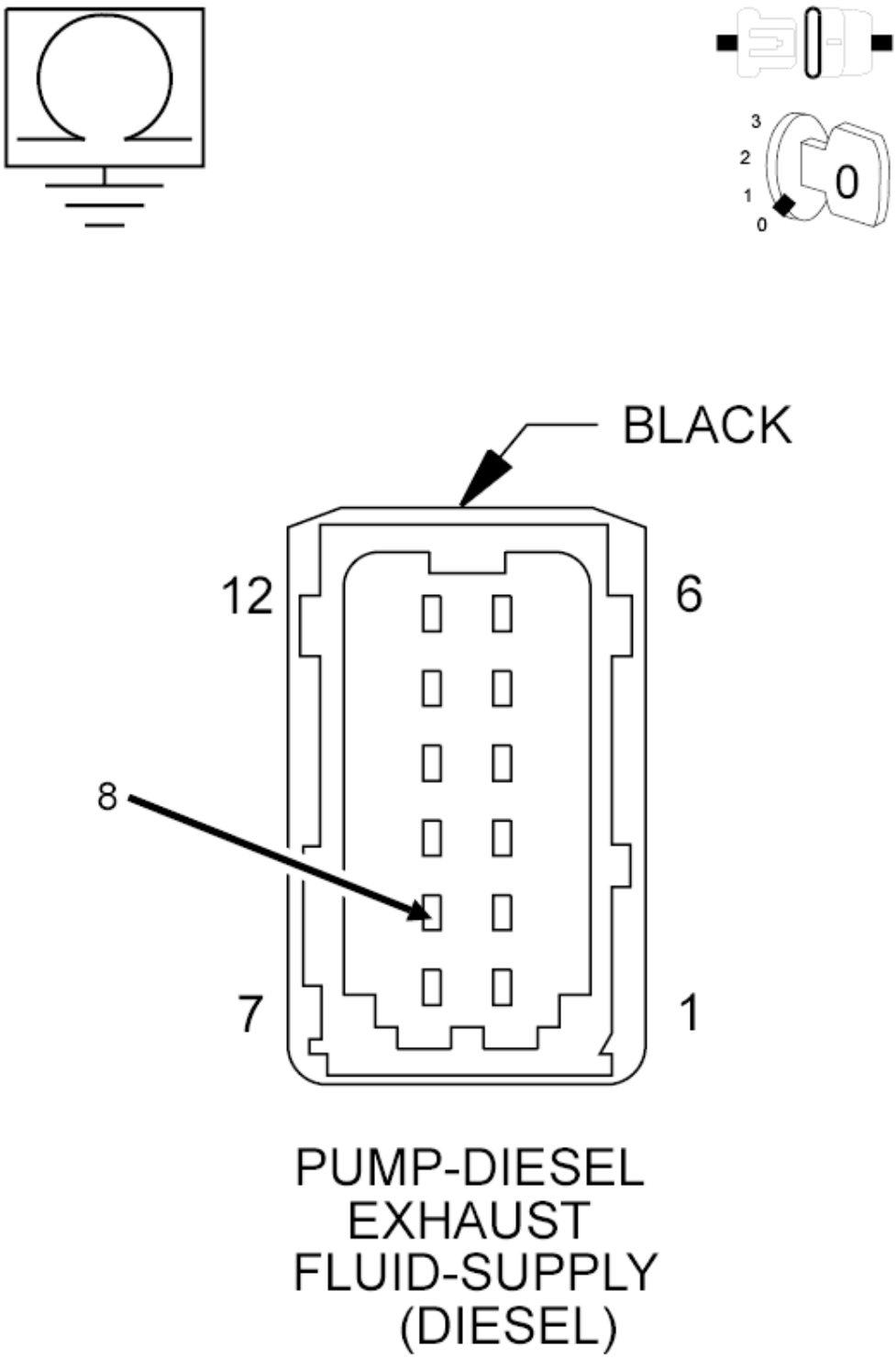

Fig. 88: Checking DEF Supply Pump Assembly Return Circuit For A Short To Ground
Courtesy of CHRYSLER GROUP, LLC

1. Measure the resistance between ground and the (K418) DEF Supply Pump Assembly Return circuit

at the DEF Supply Pump Assembly harness connector.

Is the resistance above 10k Ohms?

Yes

- Go To 4.

No

- Repair the (K418) DEF Supply Pump Assembly Return circuit for a short to ground.
- Perform the POWERTRAIN VERIFICATION TEST. Refer to **POWERTRAIN VERIFICATION TEST - 6.7L** .

4. **CHECK THE (K419) DEF SUPPLY PUMP ASSEMBLY SIGNAL CIRCUIT FOR A SHORT TO GROUND**

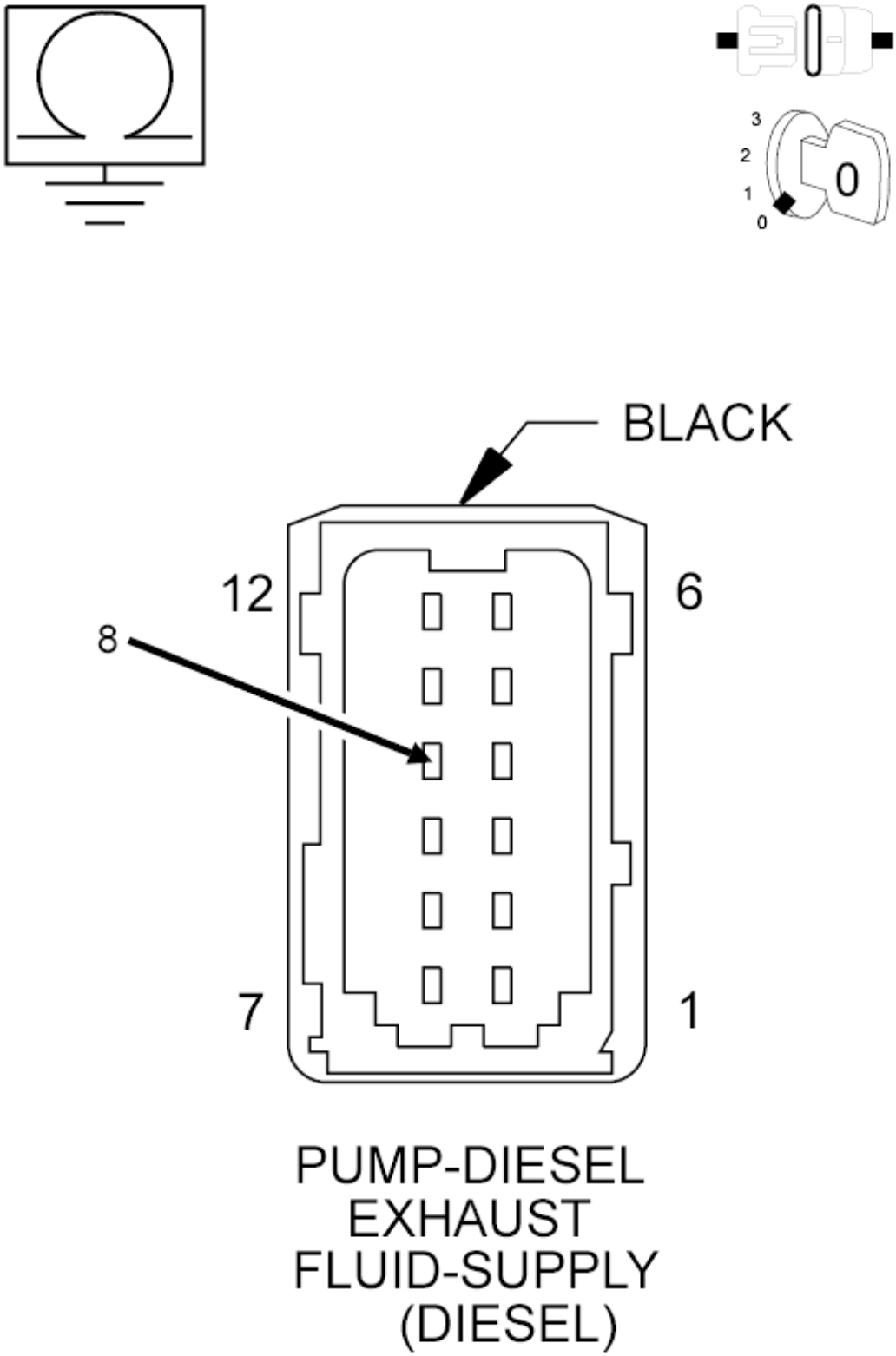

Fig. 89: Checking DEF Supply Pump Assembly Signal Circuit For A Short To Ground
Courtesy of CHRYSLER GROUP, LLC

1. Measure the resistance between ground and the (K419) DEF Supply Pump Assembly Signal circuit at the DEF Supply Pump Assembly harness connector.

   Is the resistance above 10k Ohms?

   Yes

   - Go To 5.

   No

   - Repair the (K419) DEF Supply Pump Assembly Signal circuit for a short to ground.
   - Perform the POWERTRAIN VERIFICATION TEST. Refer to **POWERTRAIN VERIFICATION TEST - 6.7L** .

5. **CHECK THE DEF DOSING CONTROL UNIT**
   1. Reconnect the DEF Dosing Control Unit C1 harness connector.
   2. Connect a jumper between the (K417) DEF Supply Pump Assembly Supply circuit and the (K419) DEF Supply Pump Assembly Signal circuit at the DEF Supply Pump Assembly harness connector.

      NOTE: Be careful not to spread the terminals.

   3. Turn the ignition on.
   4. With a scan tool, View DTCs.

      Did DTC P208D become active and DTC P208C change to stored?

      Yes

      - Replace the DEF Supply Pump Assembly in accordance with the service information. Refer to **ASSEMBLY, DIESEL EXHAUST FLUID PUMP, REMOVAL** .
      - Perform the POWERTRAIN VERIFICATION TEST. Refer to **POWERTRAIN VERIFICATION TEST - 6.7L** .

      No

      - Replace the DEF Dosing Control Unit in accordance with the service information. Refer to **UNIT, DIESEL EXHAUST FLUID DOSING CONTROL, REMOVAL** .
      - Perform the POWERTRAIN VERIFICATION TEST. Refer to **POWERTRAIN VERIFICATION TEST - 6.7L** .

P208D-(DIESEL EXHAUST FLUID) REDUCTANT PUMP CONTROL CIRCUIT HIGH

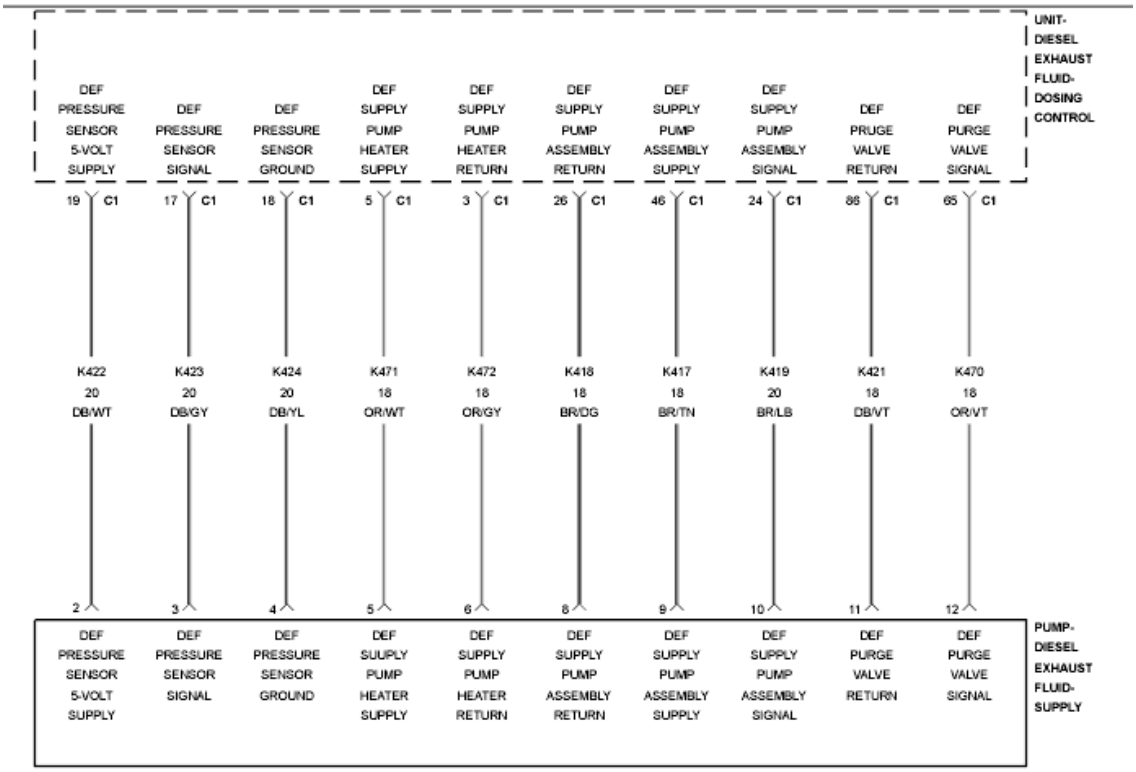

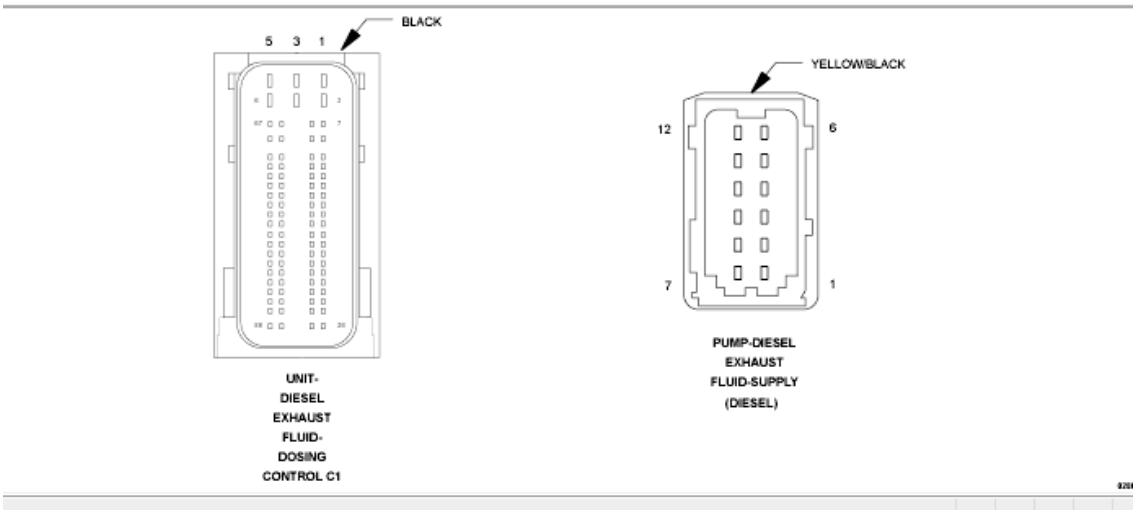

Fig. 90: Diesel Exhaust Fluid (DEF) Dosing Control Unit Wiring Diagram
Courtesy of CHRYSLER GROUP, LLC

For a complete wiring diagram, **refer to appropriate SYSTEM WIRING DIAGRAMS article** .

THEORY OF OPERATION

The Diesel Exhaust Fluid (DEF) Supply Pump Assembly has many functions. It's primary purpose is to draw fluid from the tank and build adequate system pressure for dosing into the exhaust. The DEF Dosing Control Unit provides the 12 Volt supply and ground for the pump. The DEF Dosing Control Unit also provides a Pulse Width Modulated (PWM) signal to the DEF Supply Pump Assembly to control the speed and output of the pump. The DEF Dosing Control Unit will illuminate the MIL light via the Powertrain Control Module (PCM) immediately after the diagnostics runs and fails and diesel exhaust fluid injection into the aftertreatment system is disabled. The DEF Dosing Control Unit will turn off the MIL light via the PCM when the monitor runs and passes in three consecutive key cycles.

WHEN MONITORED:

Continuously with the ignition on.

SET CONDITION:

The DEF Dosing Control Unit detects that the DEF Supply Pump Assembly circuit is above a calibrated value.

POSSIBLE CAUSES

Possible Causes
(K417) DEF SUPPLY PUMP ASSEMBLY SUPPLY CIRCUIT SHORTED TO VOLTAGE
(K418) DEF SUPPLY PUMP ASSEMBLY RETURN CIRCUIT SHORTED TO VOLTAGE
(K419) DEF SUPPLY PUMP ASSEMBLY SIGNAL CIRCUIT SHORTED TO VOLTAGE
DEF SUPPLY PUMP ASSEMBLY
DEF DOSING CONTROL UNIT

Always perform the Pre-Diagnostic Troubleshooting procedure before proceeding. Refer to PRE-DIAGNOSTIC TROUBLESHOOTING PROCEDURE - 6.7L .

DIAGNOSTIC TEST

1. **ACTIVE DTC**
    1. Turn the ignition on, engine not running.
    2. With the scan tool, navigate to Systems Tests and actuate the Diesel Exhaust Fluid Doser Pump Override Test.
    3. With the scan tool, View DTCs.

    Is the DTC active?

    Yes

    - Go To 2.

    No

- Perform the INTERMITTENT CONDITION diagnostic procedure. Refer to **INTERMITTENT CONDITION - 6.7L** .

2. **CHECK FOR THE (K417) DEF SUPPLY PUMP ASSEMBLY SUPPLY CIRCUIT SHORTED TO ANOTHER CIRCUIT**

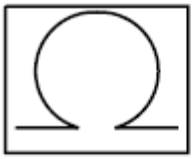

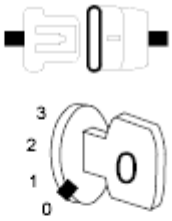

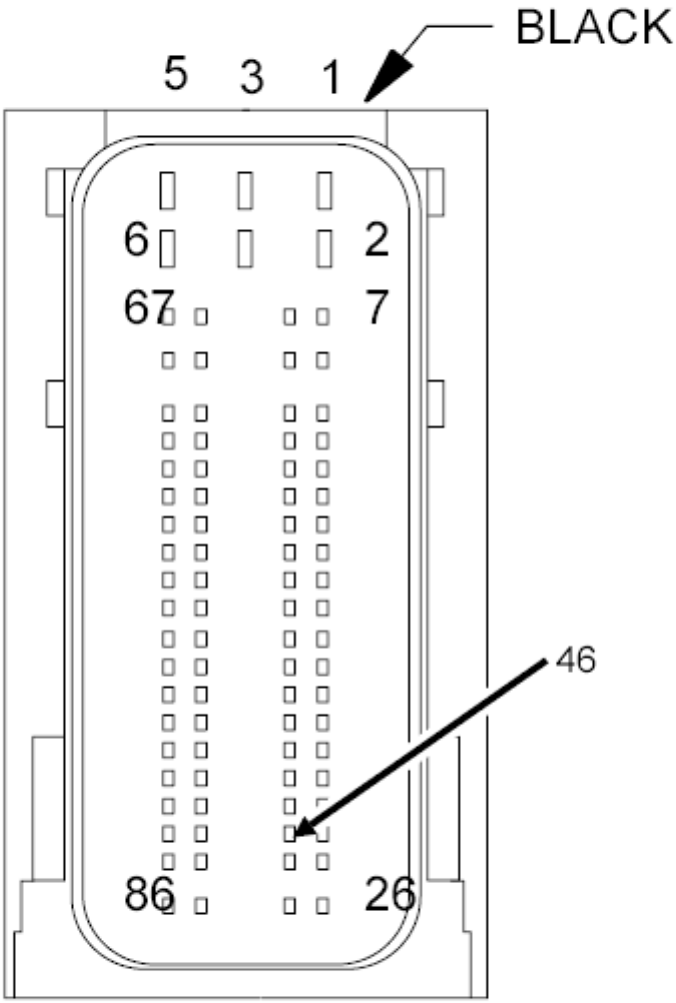

UNIT-
DIESEL
EXHAUST
FLUID-
DOSING
CONTROL C1

Fig. 91: Checking For DEF Supply Pump Assembly Supply Circuit For A Short
Courtesy of CHRYSLER GROUP, LLC

1. Turn the ignition off.
2. Disconnect the DEF Supply Pump Assembly harness connector.
3. Disconnect the DEF Dosing Control Unit C1 harness connector.
4. Measure the resistance between and the (K417) DEF Supply Pump Assembly Supply circuit and all other circuits at the DEF Dosing Control Module C1 harness connector.

   Is the resistance above 10k Ohms between the (K417) DEF Supply Pump Assembly Supply circuit and all other circuits?

   Yes

   - Go To 3.

   No

   - Repair the (K417) DEF Supply Pump Assembly Supply circuit for a short to the circuit that measured below 10k Ohms.
   - Perform the POWERTRAIN VERIFICATION TEST. Refer to **POWERTRAIN VERIFICATION TEST - 6.7L** .

3. **CHECK FOR THE (K418) DEF SUPPLY PUMP ASSEMBLY RETURN CIRCUIT SHORTED TO ANOTHER CIRCUIT**

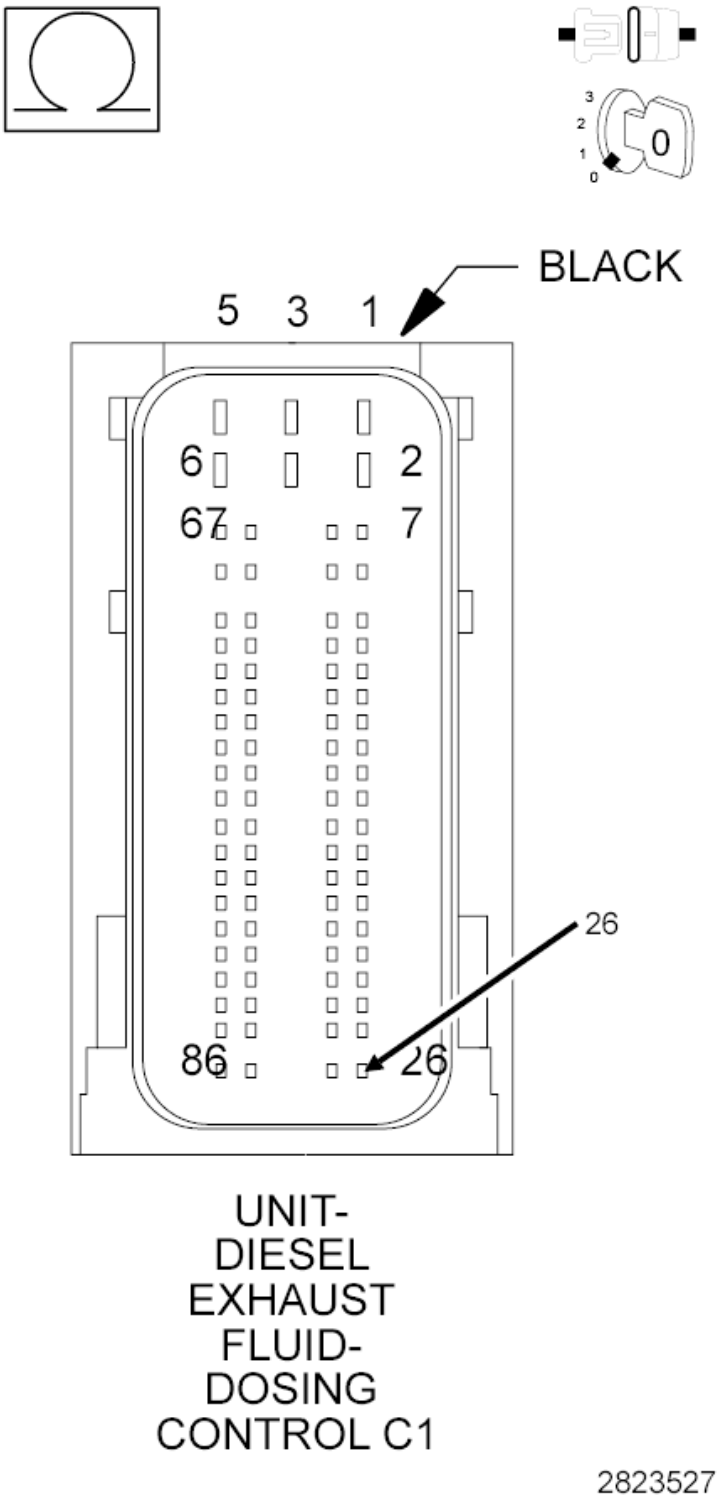

Fig. 92: Checking For DEF Supply Pump Assembly Return Circuit For A Short
Courtesy of CHRYSLER GROUP, LLC

1. Measure the resistance between and the (K418) DEF Supply Pump Assembly Return circuit and all other circuits at the DEF Dosing Control Unit C1 harness connector.

Is the resistance above 10k Ohms between the (K418) DEF Supply Pump Assembly Return circuit and all other circuits?

Yes

- Go To 4.

No

- Repair the (K418) DEF Supply Pump Assembly Return circuit for a short to the circuit that measured below 10k Ohms.
- Perform the POWERTRAIN VERIFICATION TEST. Refer to **POWERTRAIN VERIFICATION TEST - 6.7L** .

4. **CHECK FOR THE (K419) DEF SUPPLY PUMP ASSEMBLY SIGNAL CIRCUIT SHORTED TO ANOTHER CIRCUIT**

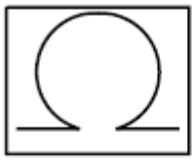

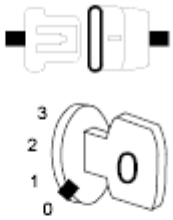

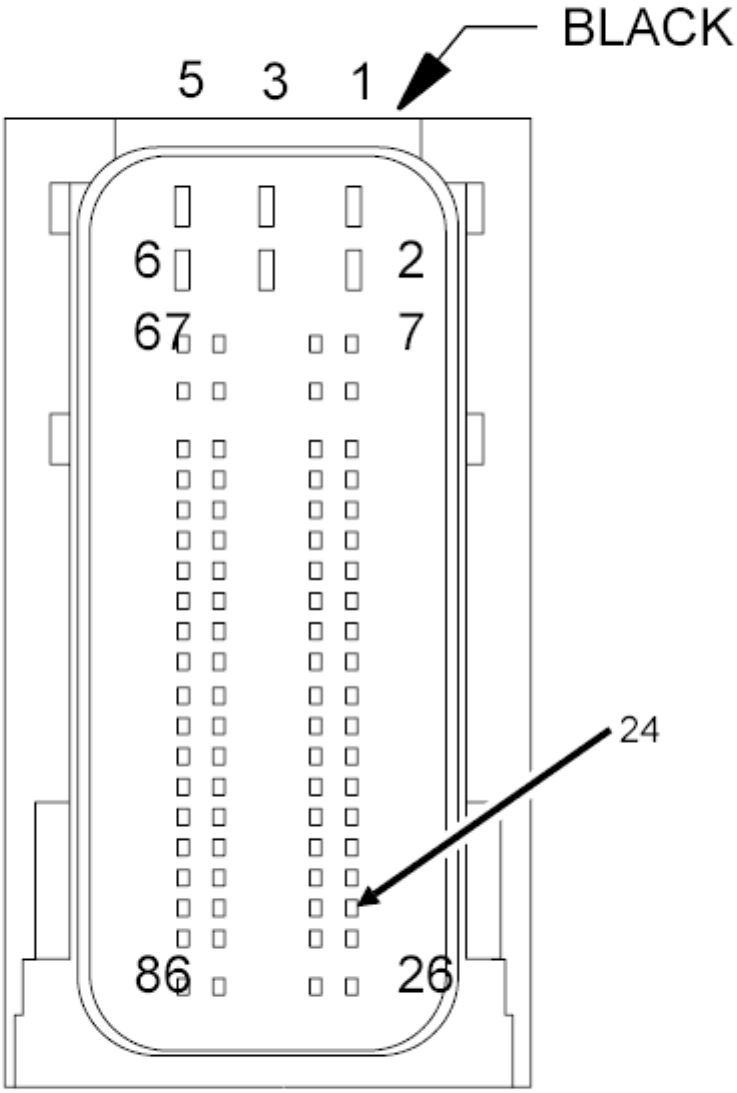

UNIT-
DIESEL
EXHAUST
FLUID-
DOSING
CONTROL C1

Fig. 93: Checking DEF Supply Pump Assembly Signal Circuit For A Short To Another Circuit
Courtesy of CHRYSLER GROUP, LLC

1. Measure the resistance between and the (K419) DEF Supply Pump Assembly Signal circuit and all other circuits at the DEF Dosing Control Unit C1 harness connector.

   Is the resistance above 10k Ohms between the (K419) DEF Supply Pump Assembly Signal circuit and all other circuits?

   Yes

   - Go To 5.

   No

   - Repair the (K419) DEF Supply Pump Assembly Signal circuit for a short to the circuit that measured below 10k Ohms.
   - Perform the POWERTRAIN VERIFICATION TEST. Refer to **POWERTRAIN VERIFICATION TEST - 6.7L** .

5. **CHECK THE DEF DOSING CONTROL UNIT**
   1. Reconnect the DEF Dosing Control Unit C1 harness connector. Leave the DEF Supply Pump Assembly harness connector disconnected.
   2. Turn the ignition on.
   3. With a scan tool, View DTCs.

      Did DTC P208A become active and DTC P208D change to stored with the DEF Supply Pump Assembly harness connector disconnected?

      Yes

      - Replace the DEF Supply Pump Assembly in accordance with the service information. Refer to **ASSEMBLY, DIESEL EXHAUST FLUID PUMP, REMOVAL** .
      - Perform the POWERTRAIN VERIFICATION TEST. Refer to **POWERTRAIN VERIFICATION TEST - 6.7L** .

      No

      - Replace the DEF Dosing Control Unit in accordance with the service information. Refer to **UNIT, DIESEL EXHAUST FLUID DOSING CONTROL, REMOVAL** .
      - Perform the POWERTRAIN VERIFICATION TEST. Refer to **POWERTRAIN VERIFICATION TEST - 6.7L** .

P209F-(DIESEL EXHAUST FLUID) REDUCTANT TANK HEATER CONTROL CIRCUIT PERFORMANCE

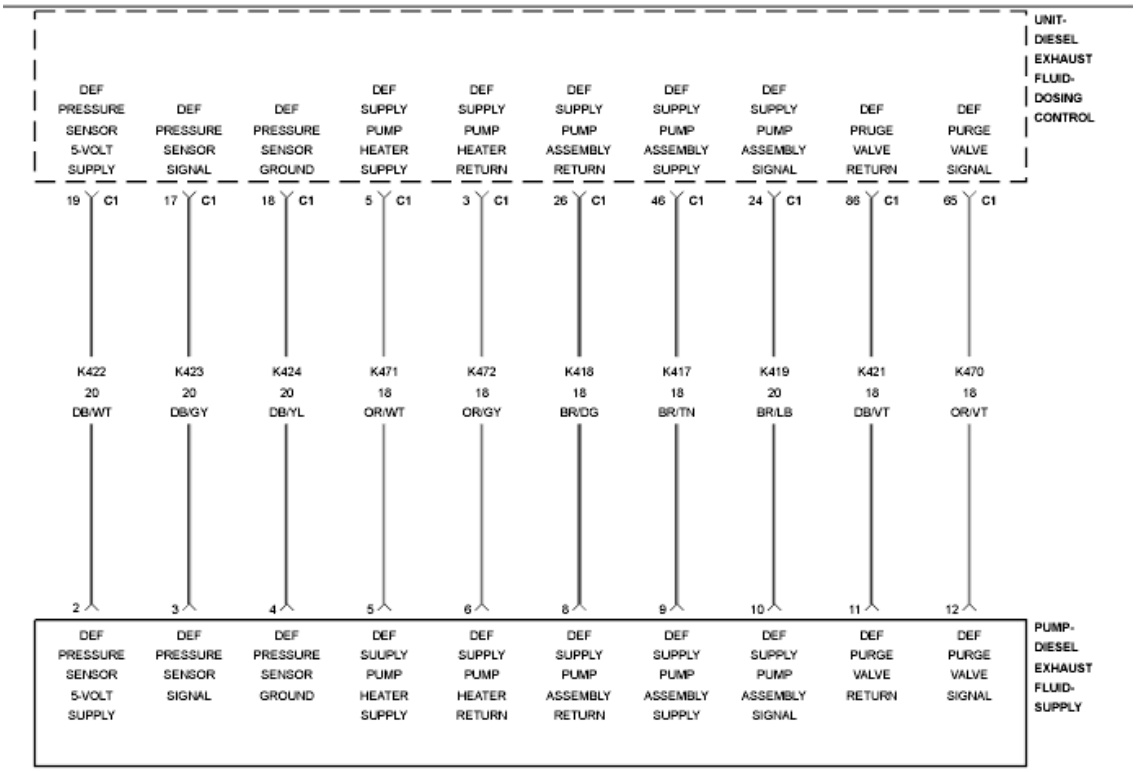

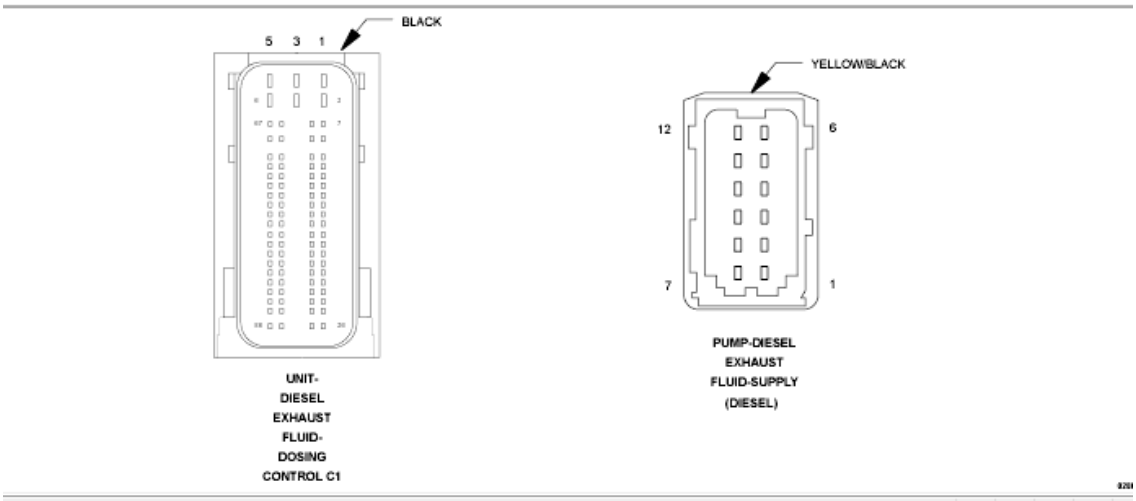

Fig. 94: Diesel Exhaust Fluid (DEF) Dosing Control Unit Wiring Diagram
Courtesy of CHRYSLER GROUP, LLC

For a complete wiring diagram, **refer to appropriate SYSTEM WIRING DIAGRAMS article** .

THEORY OF OPERATION

The Diesel Exhaust Fluid (DEF) Tank has an internal heating coil to help eliminate freezing of Diesel Exhaust Fluid. The DEF Dosing Control Unit monitors the temperature of the Diesel Exhaust Fluid inside the tank. When it is determined that the Diesel Exhaust Fluid needs to be heated, the DEF Dosing Control Unit opens the DEF Engine Coolant Valve which is located nest to the DEF Tank, and allows warm engine coolant to circulate through the heating coil inside the tank to warm the Diesel Exhaust Fluid in the tank. The DEF Dosing Control Unit will illuminate the MIL lamp via the Powertrain Module (PCM) immediately after this diagnostic runs and fails. The DEF Dosing Control Unit will turn off the MIL lamp via the PCM immediately after the diagnostic runs and passes for three consecutive key cycles.

WHEN MONITORED:

This diagnostic runs a calibrated amount of time after Diesel Exhaust Fluid Tank heating is first commanded.

SET CONDITION:

The DEF Tank heater has been on long enough for sufficient thawing of the Diesel Exhaust Fluid and the DEF system is still not able to prime.

POSSIBLE CAUSES

Possible Causes
LOW ENGINE COOLANT LEVEL
RESTRICTED OR LEAKING COOLANT LINES TO THE DIESEL EXHAUST FLUID ENGINE COOLANT CONTROL VALVE
RESTRICTED OR LEAKING COOLANT LINES TO THE DIESEL EXHAUST FLUID TANK HEATER
DIESEL EXHAUST FLUID ENGINE COOLANT CONTROL VALVE PHYSICALLY STUCK CLOSED

Always perform the Pre-Diagnostic Troubleshooting procedure before proceeding. Refer to PRE-DIAGNOSTIC TROUBLESHOOTING PROCEDURE - 6.7L .

DIAGNOSTIC TEST

1. **OTHER DTCS**
    1. Turn the ignition on, engine not running.
    2. With the scan tool, View DTCs.

    Are any of the P202A, P202B, P202C, P205C, P205D, P205E DTCs Active?

    Yes

    - Perform the diagnostic procedures for the other active DTCs before proceeding with this test.

    No

- Go To 2.

2. **CHECK THE ENGINE COOLANT LEVEL**

NOTE: **If there are DTCs present for the DEF Tank Temperature Sensor or DEF Engine Coolant Control Valve, perform those diagnostic procedures before continuing with this test procedure.**

1. Turn the ignition off.
2. Verify the engine coolant level.

   Is the engine coolant level above the minimum?

   Yes

   - Go To 3.

   No

   - Fill the engine coolant to the proper level.
   - Perform the POWERTRAIN VERIFICATION TEST. Refer to **POWERTRAIN VERIFICATION TEST - 6.7L** .

3. **CHECK FOR RESTRICTED OR LEAKING ENGINE COOLANT LINES/HOSES**
   1. Visually inspect the engine coolant supply and return lines for signs of a restriction or leaks.

      Were any restrictions or leaks found?

      Yes

      - Repair or replace the engine coolant lines in accordance with the service information.
      - Perform the POWERTRAIN VERIFICATION TEST. Refer to **POWERTRAIN VERIFICATION TEST - 6.7L** .

      No

      - Go To 4.

4. **CHECK FOR RESTRICTED DIESEL EXHAUST FLUID TANK HEATER**
   1. Remove the coolant lines at the DEF Tank Heater Coil.
   2. Blow regulated low pressure shop air through the DEF Tank Heater Coil.

      Were any restrictions found?

      Yes

      - Replace the DEF Tank Heater Coil in accordance with the service information. Refer to

SENSOR, DIESEL EXHAUST FLUID LEVEL/TEMPERATURE, REMOVAL .

- Perform the POWERTRAIN VERIFICATION TEST. Refer to **POWERTRAIN VERIFICATION TEST - 6.7L** .

No

- Replace the DEF Engine Coolant Control Valve in accordance with the service information. Refer to **VALVE, DIESEL EXHAUST FLUID ENGINE COOLANT CONTROL, REMOVAL** .
- Perform the POWERTRAIN VERIFICATION TEST. Refer to **POWERTRAIN VERIFICATION TEST - 6.7L** .

P20A0-(DIESEL EXHAUST FLUID) REDUCTANT PURGE CONTROL VALVE CIRCUIT OPEN

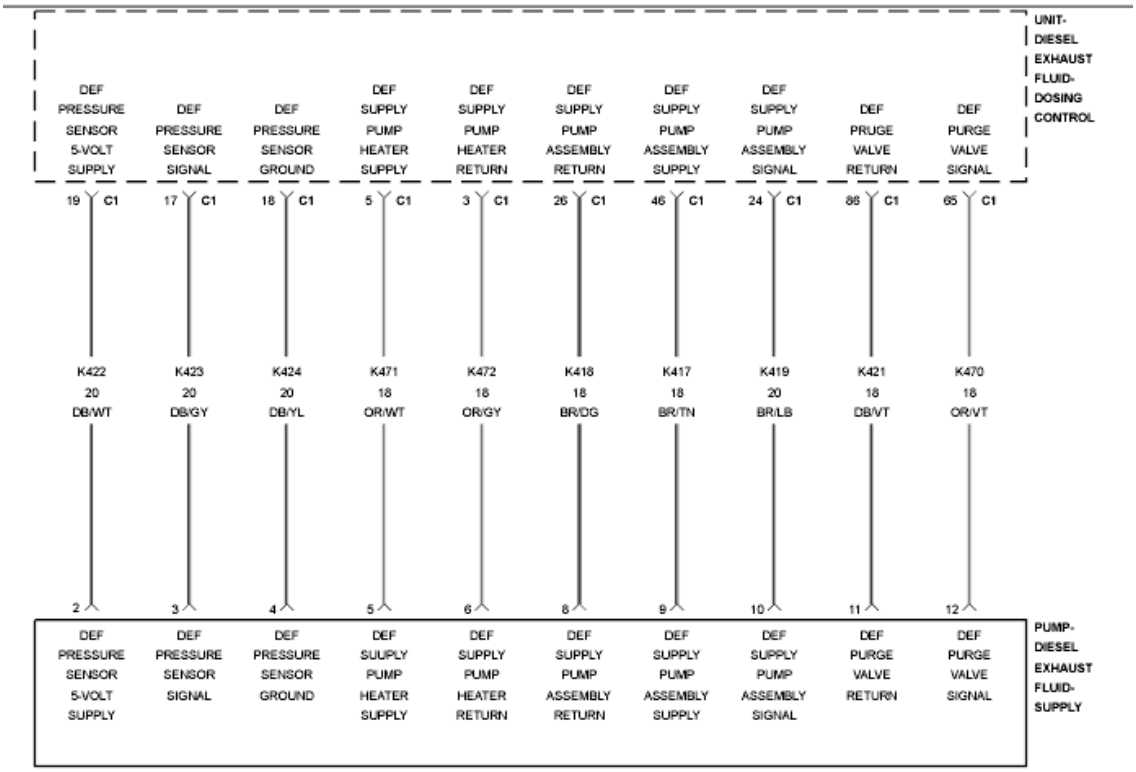

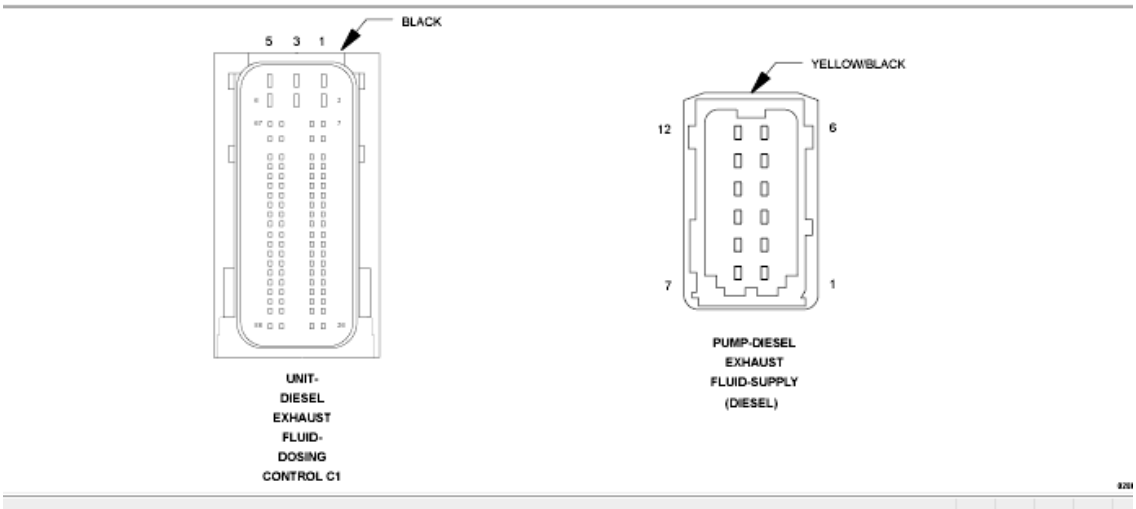

Fig. 95: Diesel Exhaust Fluid (DEF) Dosing Control Unit Wiring Diagram
Courtesy of CHRYSLER GROUP, LLC

For a complete wiring diagram, **refer to appropriate SYSTEM WIRING DIAGRAMS article** .

THEORY OF OPERATION

The Diesel Exhaust Fluid (DEF) Purge Valve is integrated into the DEF Supply Pump and is not serviceable separately. The power supply and control circuits are controlled by the DEF Dosing Control Unit. The DEF Dosing Control Unit uses the DEF Purge Valve to control the direction of the fluid flow in the DEF system. The Purge Valve position determines where diesel exhaust fluid will flow as it exits the DEF Supply Pump Assembly. The diesel exhaust fluid is pumped out of the lines and back to the tank at engine shut down to prevent the fluid from freezing in the lines. The DEF Dosing Control Unit will illuminate the MIL light via the Powertrain Control Module (PCM) immediately after the diagnostics runs and fails. The DEF Dosing Control Unit will turn off the MIL light via the PCM after the monitor runs and passes for three consecutive key cycles.

WHEN MONITORED:

Continuously with the ignition on.

SET CONDITION:

The DEF Dosing Control Unit detects that the DEF Purge Valve control circuit is open.

POSSIBLE CAUSES

Possible Causes
(K470) DEF PURGE VALVE SIGNAL CIRCUIT OPEN/HIGH RESISTANCE
(K421) DEF PURGE VALVE RETURN CIRCUIT OPEN/HIGH RESISTANCE
DEF SUPPLY PUMP ASSEMBLY
DEF DOSING CONTROL UNIT

Always perform the Pre-Diagnostic Troubleshooting procedure before proceeding. Refer to PRE-DIAGNOSTIC TROUBLESHOOTING PROCEDURE - 6.7L .

DIAGNOSTIC TEST

1. **ACTIVE DTC**
    1. Turn the ignition on, engine not running.
    2. With the scan tool, View DTCs.

    Is the DTC active?

    Yes

    - Go To 2.

    No

    - Perform the INTERMITTENT CONDITION diagnostic procedure. Refer to **INTERMITTENT CONDITION - 6.7L** .

2. **CHECK THE (K470) DEF PURGE VALVE SIGNAL CIRCUIT FOR AN OPEN/HIGH RESISTANCE**

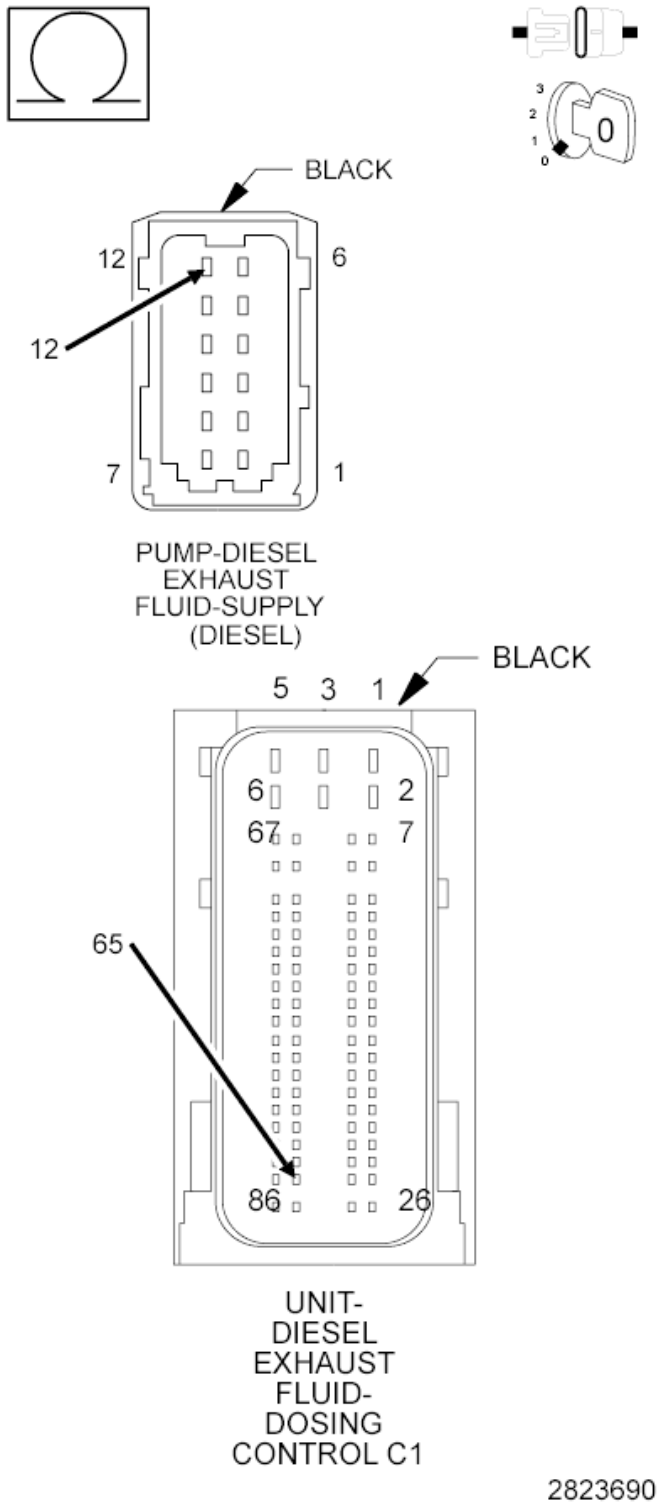

Fig. 96: Checking The DEF Purge Valve Signal Circuit For An Open Or High Resistance

1. Turn the ignition off.
2. Disconnect the DEF Supply Pump Assembly harness connector.
3. Disconnect the DEF Dosing Control Unit C1 harness connector.
4. Measure the resistance of the (K470) DEF Purge Valve Signal circuit between the DEF Supply Pump Assembly harness connector and the DEF Dosing Control Unit C1 harness connector.

   Is the resistance below 5.0 Ohms?

   Yes

   - Go To 3.

   No

   - Repair the (K470) DEF Purge Valve Signal circuit for an open or high resistance.
   - Perform the POWERTRAIN VERIFICATION TEST. Refer to **POWERTRAIN VERIFICATION TEST - 6.7L** .

3. **CHECK THE (K421) DEF PURGE VALVE RETURN CIRCUIT FOR AN OPEN/HIGH RESISTANCE**

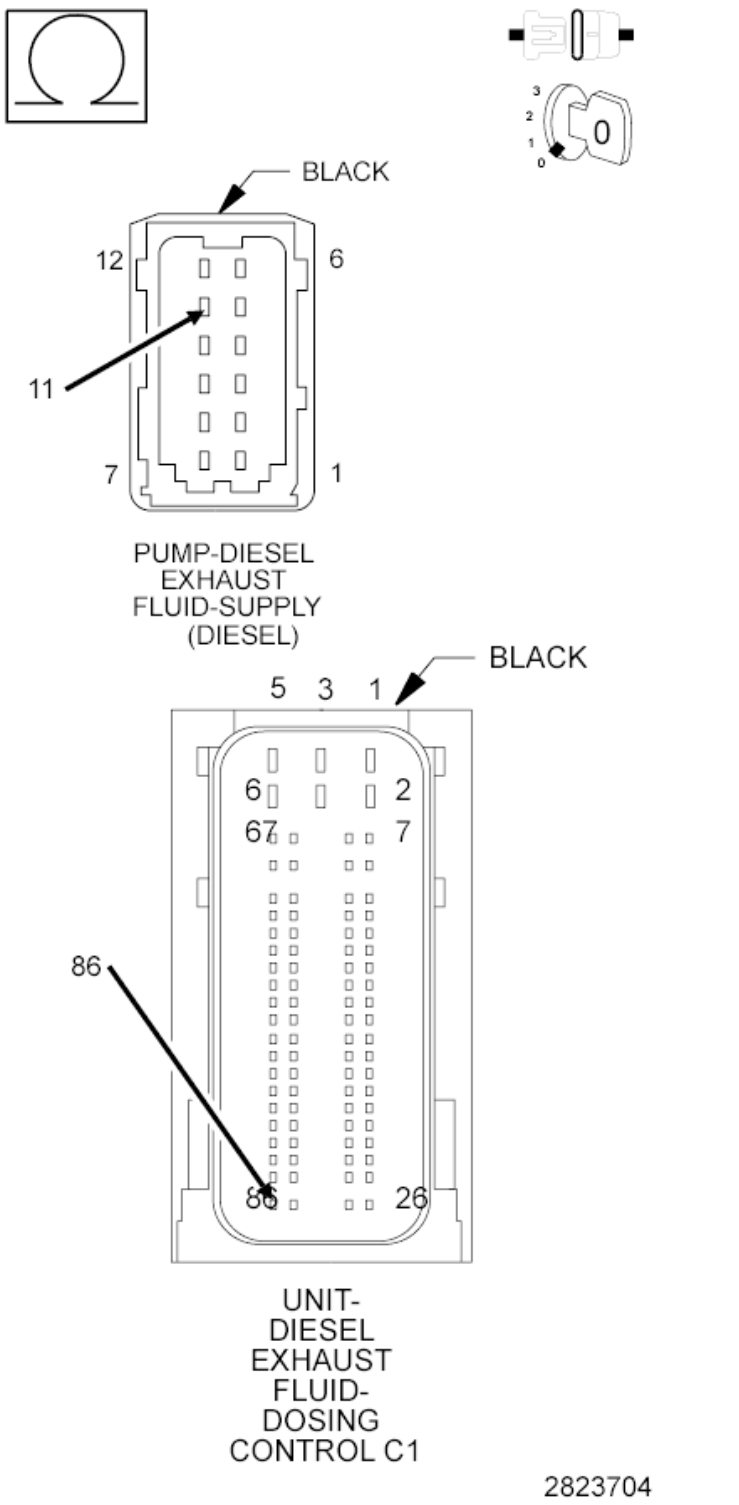

Fig. 97: Checking The DEF Purge Valve Return Circuit For An Open Or High Resistance
Courtesy of CHRYSLER GROUP, LLC

1. Measure the resistance of the (K421) DEF Purge Valve Return circuit between the DEF Supply Pump Assembly harness connector and the DEF Dosing Control Unit C1 harness connector.

Is the resistance below 5.0 Ohms?

Yes

- Go To 4.

No

- Repair the (K421) DEF Purge Valve Return circuit for an open or high resistance.
- Perform the POWERTRAIN VERIFICATION TEST. Refer to **POWERTRAIN VERIFICATION TEST - 6.7L** .

4. **CHECK THE DEF PURGE VALVE**
   1. Reconnect the DEF Dosing Control Unit C1 harness connector.
   2. Connect a jumper between the (K470) DEF Purge Valve Signal circuit and the (K421) DEF Purge Valve Return circuit at the DEF Supply Pump Assembly harness connector.

      NOTE: Be careful not to spread the terminals.

   3. Turn the ignition on.
   4. With a scan tool, View DTCs.

      Did DTC P20A3 become active and DTC P20A0 change to stored with the jumper in place?

      Yes

      - Replace the DEF Supply Pump Assembly in accordance with the service information. Refer to **ASSEMBLY, DIESEL EXHAUST FLUID PUMP, REMOVAL** .
      - Perform the POWERTRAIN VERIFICATION TEST. Refer to **POWERTRAIN VERIFICATION TEST - 6.7L** .

      No

      - Replace the DEF Dosing Control Unit in accordance with the service information. Refer to **UNIT, DIESEL EXHAUST FLUID DOSING CONTROL, REMOVAL** .
      - Perform the POWERTRAIN VERIFICATION TEST. Refer to **POWERTRAIN VERIFICATION TEST - 6.7L** .

P20A2-(DIESEL EXHAUST FLUID) REDUCTANT PURGE CONTROL VALVE CIRCUIT LOW

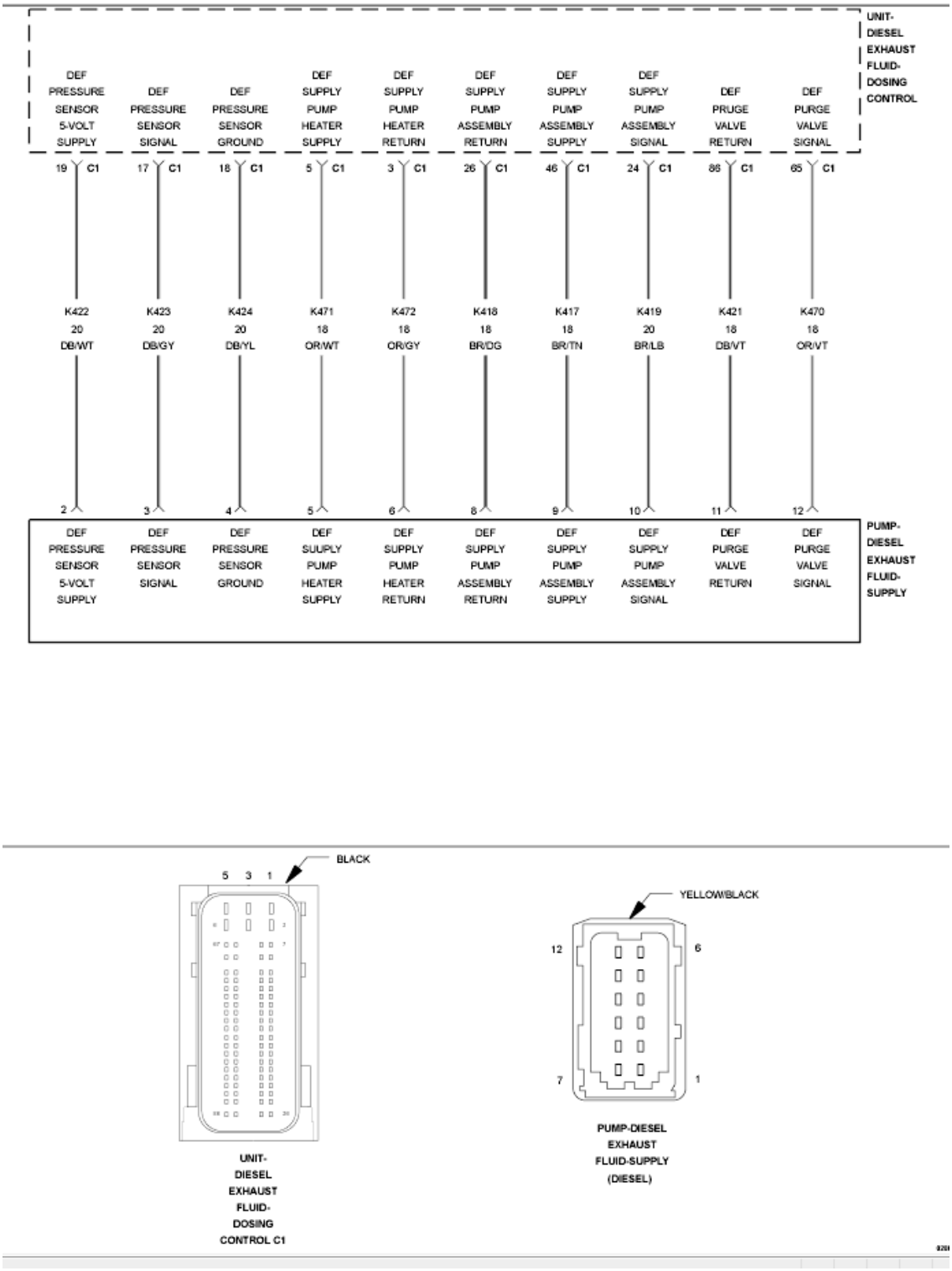

Fig. 98: Diesel Exhaust Fluid (DEF) Dosing Control Unit Wiring Diagram
Courtesy of CHRYSLER GROUP, LLC

For a complete wiring diagram, **refer to appropriate SYSTEM WIRING DIAGRAMS article** .

THEORY OF OPERATION

The Diesel Exhaust Fluid (DEF) Purge Valve is housed inside the DEF Supply Pump and is not serviceable separately. The power supply and control circuits are controlled by the DEF Dosing Control Unit. The DEF Dosing Control Unit uses the DEF Purge Valve to control the direction of the fluid flow in the DEF system. The Purge Valve position determines where diesel exhaust fluid will flow as it exits the DEF Supply Pump Assembly. The diesel exhaust fluid is pumped out of the lines and back to the tank at engine shut down to prevent the fluid from freezing in the lines. The DEF Dosing Control Unit will illuminate the MIL light via the Powertrain Control Module (PCM) immediately after the diagnostics runs and fails. The DEF Dosing Control Unit will turn off the MIL light via the PCM after the monitor runs and passes for three consecutive key cycles.

WHEN MONITORED:

Continuously with the ignition on.

SET CONDITION:

The DEF Dosing Control Unit detects that the DEF Purge Valve control circuit is below 0.25 Volts for one second.

POSSIBLE CAUSES

Possible Causes
(K470) DEF PURGE VALVE SIGNAL CIRCUIT SHORTED TO GROUND
(K421) DEF PURGE VALVE RETURN CIRCUIT SHORTED TO GROUND
DEF SUPPLY PUMP ASSEMBLY
DEF DOSING CONTROL UNIT

Always perform the Pre-Diagnostic Troubleshooting procedure before proceeding. Refer to PRE-DIAGNOSTIC TROUBLESHOOTING PROCEDURE - 6.7L .

DIAGNOSTIC TEST

1. **ACTIVE DTC**
    1. Turn the ignition on, engine not running.
    2. With the scan tool, View DTCs.

       Is the DTC active?

       Yes

       - Go To 2.

       No

       - Perform the INTERMITTENT CONDITION diagnostic procedure. Refer to **INTERMITTENT CONDITION - 6.7L** .

2. **CHECK THE (K470) DEF PURGE VALVE SIGNAL CIRCUIT FOR A SHORT TO GROUND**

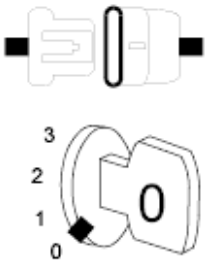

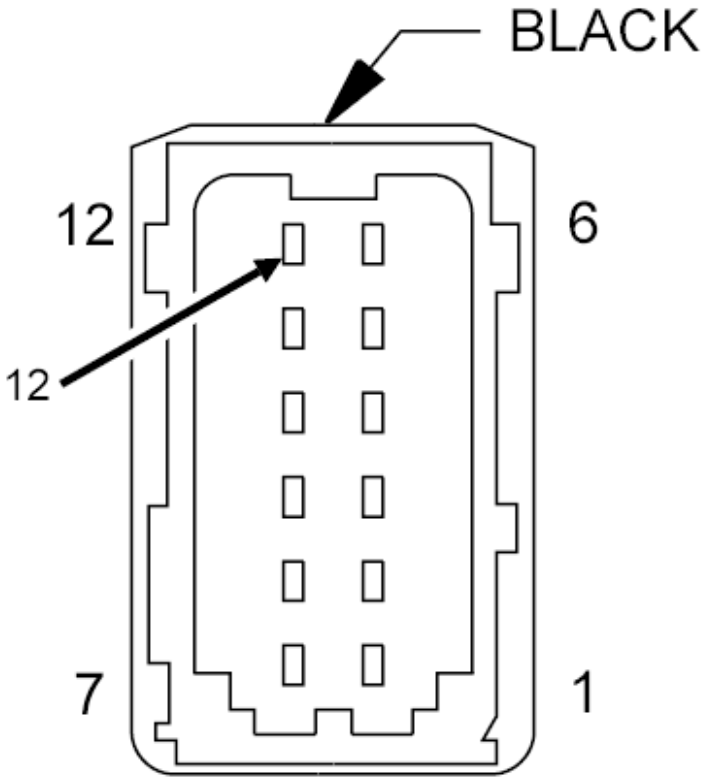

PUMP-DIESEL
EXHAUST
FLUID-SUPPLY
(DIESEL)

Fig. 99: Checking The DEF Purge Valve Signal Circuit For A Short To Ground
Courtesy of CHRYSLER GROUP, LLC

1. Turn the ignition off.
2. Disconnect the DEF Supply Pump Assembly harness connector.
3. Disconnect the DEF Dosing Control Unit C1 harness connector.
4. Measure the resistance between ground and the (K470) DEF Purge Valve Signal circuit at the DEF Supply Pump Assembly harness connector.

   Is the resistance above 10k Ohms?

   Yes

   - Go To 3.

   No

   - Repair the (K470) DEF Purge Valve Signal circuit for a short to ground.
   - Perform the POWERTRAIN VERIFICATION TEST. Refer to **POWERTRAIN VERIFICATION TEST - 6.7L** .

3. **CHECK THE (K421) DEF PURGE VALVE RETURN CIRCUIT FOR A SHORT TO GROUND**

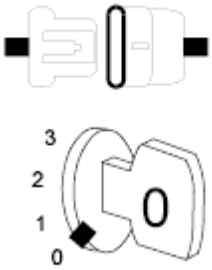

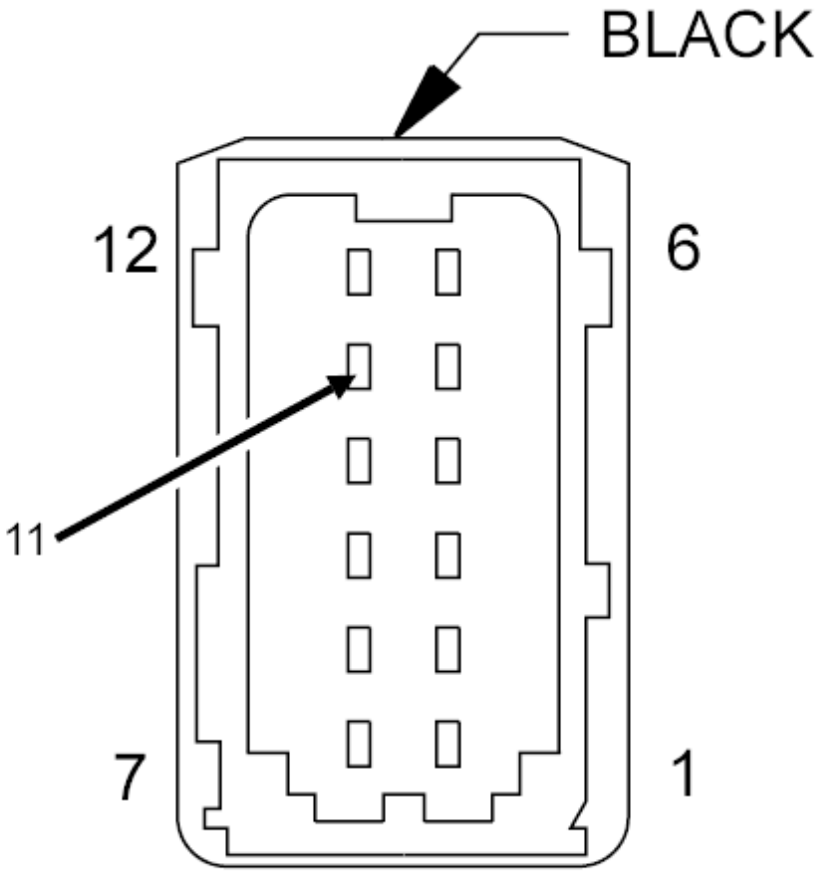

PUMP-DIESEL
EXHAUST
FLUID-SUPPLY
(DIESEL)

Fig. 100: Checking The DEF Purge Valve Return Circuit For A Short To Ground
Courtesy of CHRYSLER GROUP, LLC

1. Measure the resistance between ground and the (K421) DEF Purge Valve Return circuit at the DEF Supply Pump Assembly harness connector.

   Is the resistance above 10k Ohms?

   Yes

   - Go To 4.

   No

   - Repair the (K421) DEF Purge Valve Return circuit for a short to ground.
   - Perform the POWERTRAIN VERIFICATION TEST. Refer to **POWERTRAIN VERIFICATION TEST - 6.7L** .

4. **CHECK THE DEF PURGE VALVE**
   1. Reconnect the DEF Dosing Control Unit C1 harness connector.
   2. Connect a jumper between the (K470) DEF Purge Valve Signal circuit and the (K421) DEF Purge Valve Return circuit at the DEF Supply Pump Assembly harness connector.

      NOTE: Be careful not to spread the terminals.

   3. Turn the ignition on.
   4. With a scan tool, View DTCs.

      Did DTC P20A3 become active and DTC P20A2 change to stored with the jumper in place?

      Yes

      - Replace the DEF Supply Pump Assembly in accordance with the service information. Refer to **ASSEMBLY, DIESEL EXHAUST FLUID PUMP, REMOVAL** .
      - Perform the POWERTRAIN VERIFICATION TEST. Refer to **POWERTRAIN VERIFICATION TEST - 6.7L** .

      No

      - Replace the DEF Dosing Control Unit in accordance with the service information. Refer to **UNIT, DIESEL EXHAUST FLUID DOSING CONTROL, REMOVAL** .
      - Perform the POWERTRAIN VERIFICATION TEST. Refer to **POWERTRAIN VERIFICATION TEST - 6.7L** .

P20A3-(DIESEL EXHAUST FLUID) REDUCTANT PURGE CONTROL VALVE CIRCUIT HIGH

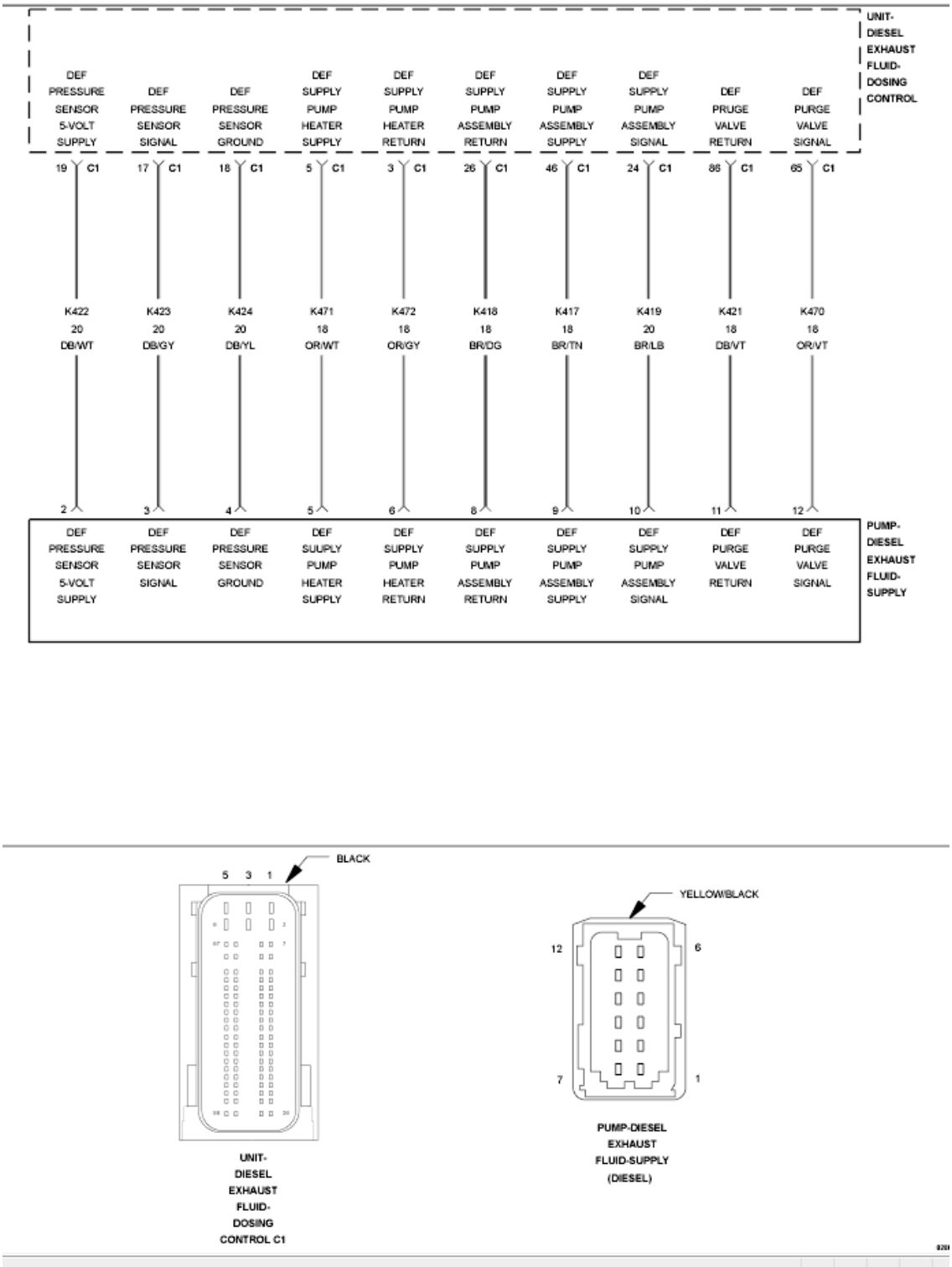

Fig. 101: Diesel Exhaust Fluid (DEF) Dosing Control Unit Wiring Diagram
Courtesy of CHRYSLER GROUP, LLC

For a complete wiring diagram, **refer to appropriate SYSTEM WIRING DIAGRAMS article** .

THEORY OF OPERATION

The Diesel Exhaust Fluid (DEF) Purge Valve is housed inside the DEF Supply Pump and is not serviceable separately. The power supply and control circuits are controlled by the DEF Dosing Control Unit. The DEF Dosing Control Unit uses the DEF Purge Valve to control the direction of the fluid flow in the DEF system. The Purge Valve position determines where diesel exhaust fluid will flow as it exits the DEF Supply Pump Assembly. The diesel exhaust fluid is pumped out of the lines and back to the tank at engine shut down to prevent the fluid from freezing in the lines. The DEF Dosing Control Unit will illuminate the MIL light via the Powertrain Control Module (PCM) immediately after the diagnostics runs and fails. The DEF Dosing Control Unit will turn off the MIL light via the PCM after the monitor runs and passes for three consecutive key cycles.

WHEN MONITORED:

Continuously with the ignition on.

SET CONDITION:

The DEF Dosing Control Unit detects that the DEF Purge Valve control circuit is above a calibrated value for one second.

POSSIBLE CAUSES

Possible Causes
(K421) DEF PURGE VALVE RETURN CIRCUIT SHORTED TO VOLTAGE
(K421) DEF PURGE VALVE RETURN CIRCUIT SHORTED TO THE (K470) DEF PURGE VALVE SIGNAL CIRCUIT
DEF SUPPLY PUMP ASSEMBLY
DEF DOSING CONTROL UNIT

Always perform the Pre-Diagnostic Troubleshooting procedure before proceeding. Refer to PRE-DIAGNOSTIC TROUBLESHOOTING PROCEDURE - 6.7L .

DIAGNOSTIC TEST

1. **ACTIVE DTC**
    1. Turn the ignition on, engine not running.
    2. With the scan tool, View DTCs.

    Is the DTC active?

    Yes

    - Go To 2.

    No

    - Perform the INTERMITTENT CONDITION diagnostic procedure. Refer to

INTERMITTENT CONDITION - 6.7L .

2. **CHECK THE DEF PURGE VALVE**
    1. Turn the ignition off.
    2. Disconnect the DEF Supply Pump Assembly harness connector.
    3. Turn the ignition on.
    4. With a scan tool, View DTCs.

    Did DTC P20A0 become active and DTC P20A3 change to stored with the jumper in place?

    Yes

    - Replace the DEF Supply Pump Assembly in accordance with the service information. Refer to **ASSEMBLY, DIESEL EXHAUST FLUID PUMP, REMOVAL** .
    - Perform the POWERTRAIN VERIFICATION TEST. Refer to **POWERTRAIN VERIFICATION TEST - 6.7L** .

    No

    - Go To 3.
3. **CHECK FOR THE (K421) DEF PURGE VALVE RETURN CIRCUIT SHORTED TO ANOTHER CIRCUIT**

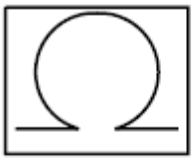

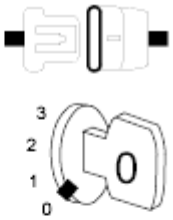

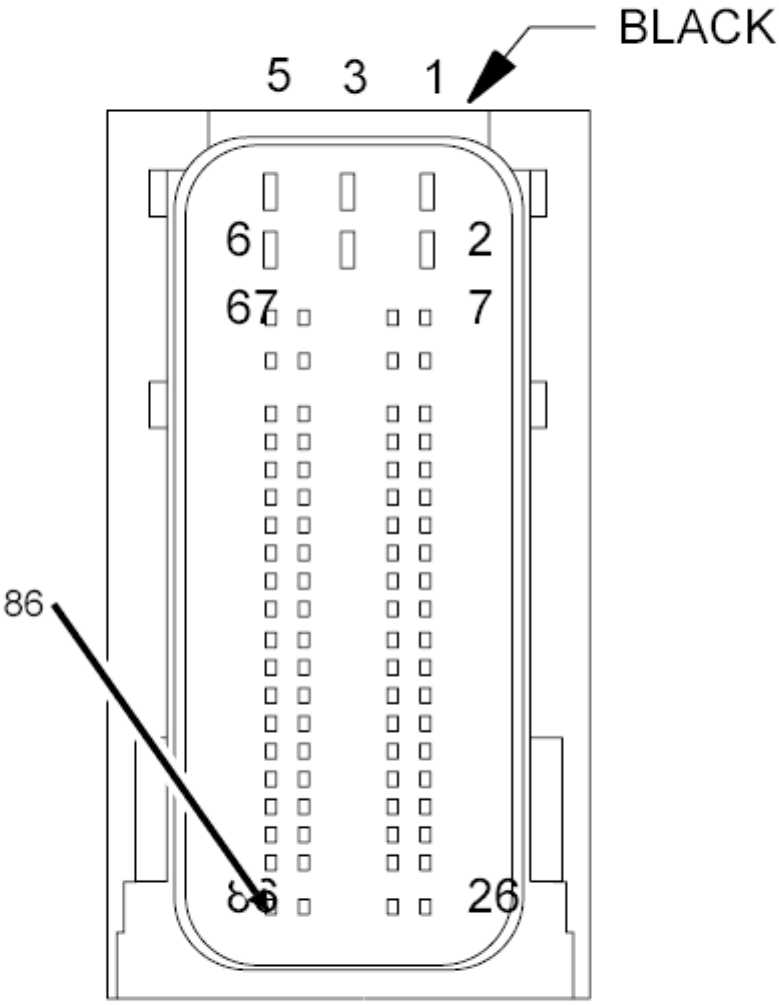

UNIT-
DIESEL
EXHAUST
FLUID-
DOSING
CONTROL C1

Fig. 102: Checking DEF Purge Valve Return Circuit For A Short To Another Circuit
Courtesy of CHRYSLER GROUP, LLC

1. Disconnect the DEF Dosing Control Unit C1 harness connector.
2. Measure the resistance between the (K421) DEF Purge Valve Return circuit and all other circuits at the DEF Dosing Control Unit C1 harness connector.

   Is the resistance above 10k Ohms?

   Yes

   - Replace the DEF Dosing Control Unit in accordance with the service information. Refer to **UNIT, DIESEL EXHAUST FLUID DOSING CONTROL, REMOVAL** .
   - Perform the POWERTRAIN VERIFICATION TEST. Refer to **POWERTRAIN VERIFICATION TEST - 6.7L** .

   No

   - Repair the (K421) DEF Purge Valve Return circuit for a short to the circuit that measured below 10k Ohms.
   - Perform the POWERTRAIN VERIFICATION TEST. Refer to **POWERTRAIN VERIFICATION TEST - 6.7L** .

P20B0-(DIESEL EXHAUST FLUID) REDUCTANT PUMP TEMPERATURE PERFORMANCE

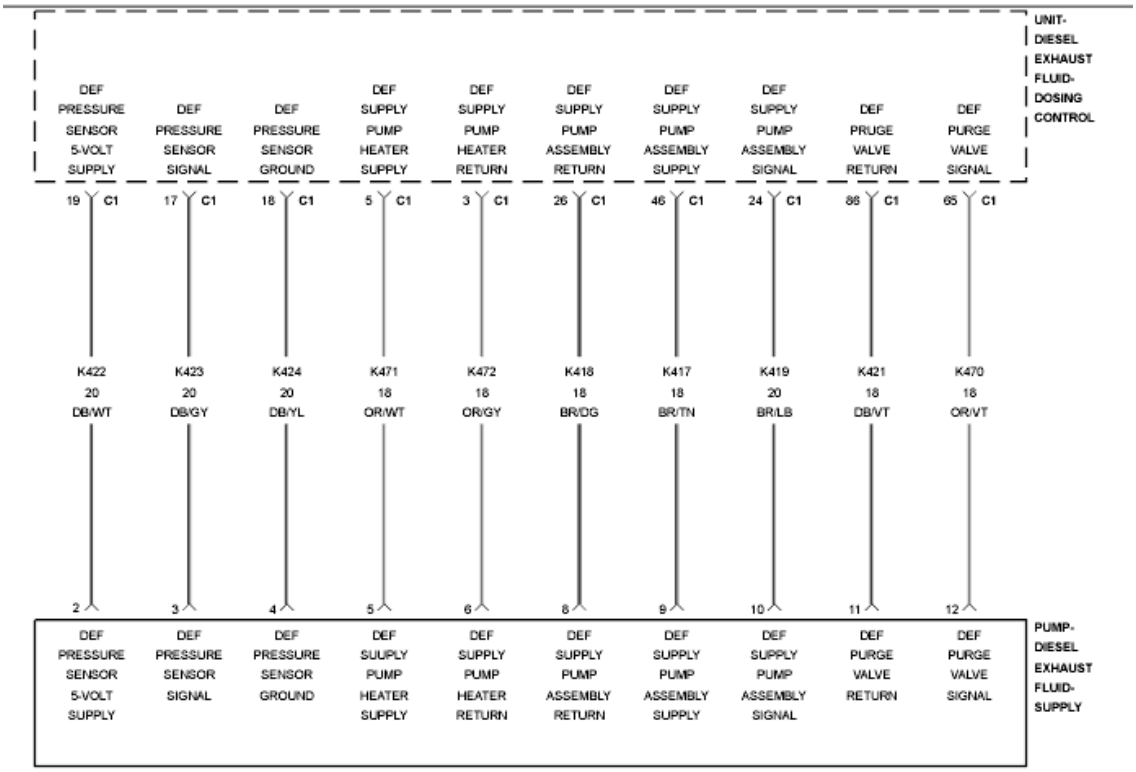

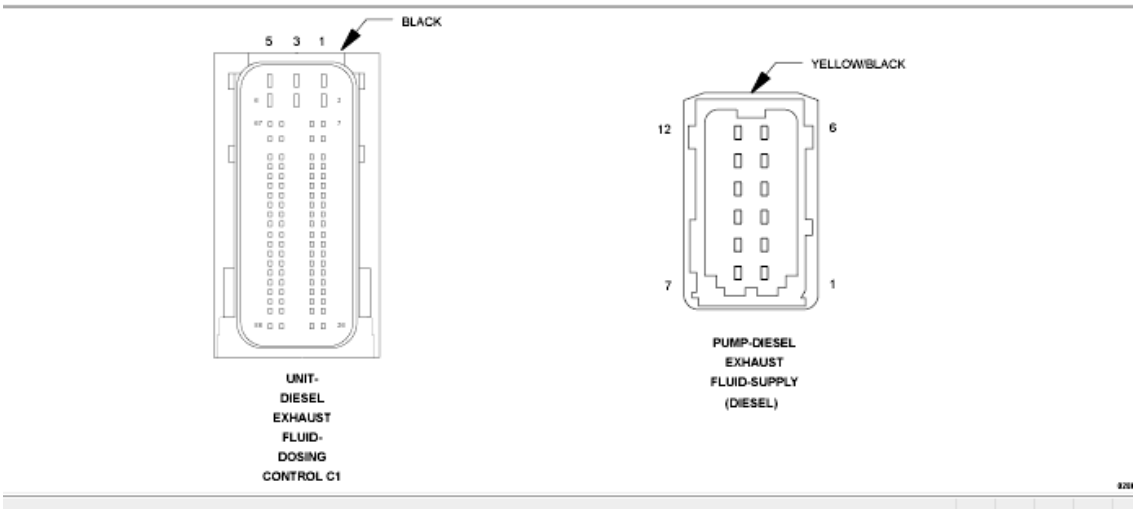

Fig. 103: Diesel Exhaust Fluid (DEF) Dosing Control Unit Wiring Diagram
Courtesy of CHRYSLER GROUP, LLC

For a complete wiring diagram, **refer to appropriate SYSTEM WIRING DIAGRAMS article** .

THEORY OF OPERATION

The Diesel Exhaust Fluid (DEF) Supply Pump Assembly has an internal temperature sensor which reports the internal temperature of the DEF Supply Pump Assembly to the DEF Dosing Control Unit. This fault is triggered if the DEF Supply Pump Assembly Temperature Sensor is different than the other temperature sensors on the engine. This indicates an internal problem in the DEF Supply Pump Assembly.

WHEN MONITORED:

At ignition on. Monitor runs until the DEF Supply Pump attempts to prime the system.

SET CONDITION:

The Supply Pump temperature reading is erratic or the Supply Pump internal temperature is not communicated to Powertrain Control Module by the DEF Dosing Control Unit.

POSSIBLE CAUSES

Possible Causes
(K419) DEF SUPPLY PUMP ASSEMBLY SIGNAL CIRCUIT SHORTED TO GROUND
DEF SUPPLY PUMP ASSEMBLY

Always perform the Pre-Diagnostic Troubleshooting procedure before proceeding. Refer to PRE-DIAGNOSTIC TROUBLESHOOTING PROCEDURE - 6.7L .

DIAGNOSTIC TEST

1. **ACTIVE DTC**

   NOTE: Diagnose and repair any other DEF system DTCs that are active before continuing with this test procedure.

   1. Ignition on, engine not running.
   2. With the scan tool, read DTCs.

      Is the DTC active?

      Yes

      - Go To 2.

      No

      - Perform the INTERMITTENT CONDITION diagnostic procedure. Refer to **INTERMITTENT CONDITION - 6.7L** .
2. **CHECK THE (K419) DEF SUPPLY PUMP ASSEMBLY SIGNAL CIRCUIT FOR A SHORT TO**

GROUND

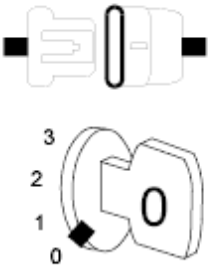

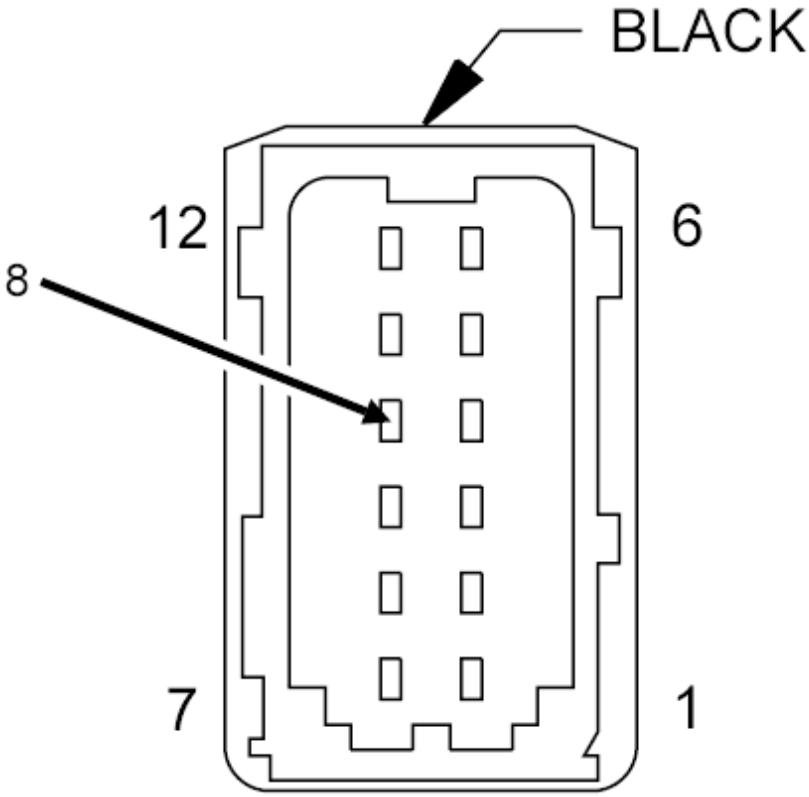

PUMP-DIESEL
EXHAUST
FLUID-SUPPLY
(DIESEL)

Fig. 104: Checking DEF Supply Pump Assembly Signal Circuit For A Short To Ground
Courtesy of CHRYSLER GROUP, LLC

1. Turn the ignition off.
2. Disconnect the DEF Supply Pump Assembly harness connector.
3. Disconnect the DEF Dosing Control Unit C1 harness connector.
4. Measure the resistance between ground and the (K419) DEF Supply Pump Assembly Signal circuit at the DEF Supply Pump Assembly harness connector.

   Is the resistance above 10k Ohms?

   Yes

   - Replace the DEF Supply Pump Assembly in accordance with the service information. Refer to **ASSEMBLY, DIESEL EXHAUST FLUID PUMP, REMOVAL** .
   - Perform the POWERTRAIN VERIFICATION TEST. Refer to **POWERTRAIN VERIFICATION TEST - 6.7L** .

   No

   - Repair the (K419) DEF Supply Pump Assembly Signal circuit for a short to ground.
   - Perform the POWERTRAIN VERIFICATION TEST. Refer to **POWERTRAIN VERIFICATION TEST - 6.7L** .

P20B2-(DIESEL EXHAUST FLUID) REDUCTANT HEATER CONTROL VALVE PERFORMANCE

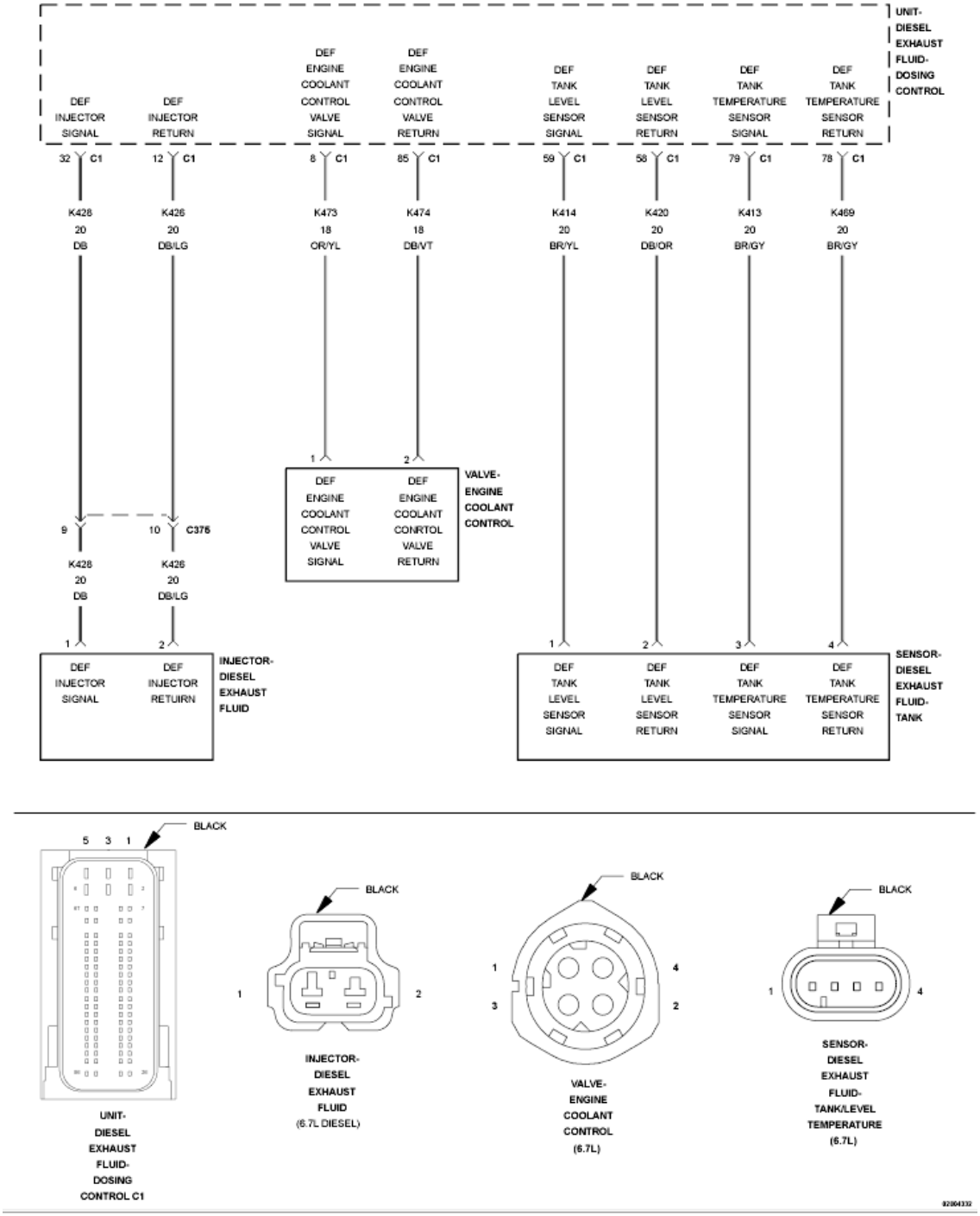

Fig. 105: Diesel Exhaust Fluid Reductant Tank Heater Control Circuit Wiring Diagram
Courtesy of CHRYSLER GROUP, LLC

For a complete wiring diagram, **refer to appropriate SYSTEM WIRING DIAGRAMS article** .

THEORY OF OPERATION

The Diesel Exhaust Fluid (DEF) Tank Level Sensor and Diesel Exhaust Fluid (DEF) Tank Temperature Sensor

are a combination sensor used to measure the level and temperature of the fluid in the DEF Tank. Though combined, the level sensor and the temperature sensor operate independent of each other. Both sensors operate as a two wire 5-Volt sensor. The DEF Tank Level Sensor is a 14 point magnetic reed switch sensor. The DEF Tank Temperature Sensor is a negative temperature coefficient sensor. The DEF Dosing Control Unit will illuminate the MIL lamp via the Powertrain Control Module (PCM) immediately after this diagnostic runs and fails. The DEF Dosing Control Unit will turn off the MIL lamp via the PCM immediately after the diagnostic runs and passes in three consecutive key cycles.

WHEN MONITORED:

This monitor runs a short time after Diesel Exhaust Fluid Tank heating is commanded.

SET CONDITION:

The DEF Dosing Control Unit does not detect a corresponding temperature increase by the DEF Tank Temperature Sensor after the Diesel Exhaust Fluid Tank heating is commanded on.

POSSIBLE CAUSES

Possible Causes
LOW ENGINE COOLANT LEVEL
BLOCKED OR RESTRICTED COOLANT LINES TO THE DIESEL EXHAUST FLUID ENGINE COOLANT CONTROL VALVE
BLOCKED OR RESTRICTED COOLANT LINES TO THE DIESEL EXHAUST FLUID TANK HEATER
DIESEL EXHAUST FLUID ENGINE COOLANT CONTROL VALVE PHYSICALLY STUCK CLOSED

Always perform the Pre-Diagnostic Troubleshooting procedure before proceeding. Refer to PRE-DIAGNOSTIC TROUBLESHOOTING PROCEDURE - 6.7L .

DIAGNOSTIC TEST

1. **CHECK THE ENGINE COOLANT LEVEL**

NOTE: **If there are DTCs present for the DEF Tank Temperature Sensor or DEF Engine Coolant Control Valve, perform those diagnostic procedures before continuing with this test procedure.**

1. Turn the ignition off.
2. Verify the engine coolant level.

   Is the engine coolant level above the minimum?

   Yes

- Go To 2.

No

- Fill the engine coolant to the proper level.
- Perform the POWERTRAIN VERIFICATION TEST. Refer to **POWERTRAIN VERIFICATION TEST - 6.7L** .

2. **CHECK FOR BLOCKED OR RESTRICTED ENGINE COOLANT LINES/HOSES**
   1. Visually inspect the engine coolant supply and return lines for signs of a restriction of leaks.

      Were any restrictions or leaks found?

      Yes

      - Repair or replace the engine coolant lines in accordance with the service information.
      - Perform the POWERTRAIN VERIFICATION TEST. Refer to **POWERTRAIN VERIFICATION TEST - 6.7L** .

      No

      - Go To 3.
3. **CHECK FOR BLOCKED OR RESTRICTED DIESEL EXHAUST FLUID TANK HEATER**
   1. Remove the coolant lines at the DEF Tank Heater Coil.
   2. Blow regulated low pressure shop air through the DEF Tank Heater Coil.

      Were any restrictions found?

      Yes

      - Replace the DEF Tank Heater Coil in accordance with the service information. Refer to **SENSOR, DIESEL EXHAUST FLUID LEVEL/TEMPERATURE, REMOVAL** .
      - Perform the POWERTRAIN VERIFICATION TEST. Refer to **POWERTRAIN VERIFICATION TEST - 6.7L** .

      No

      - Replace the DEF Engine Coolant Control Valve in accordance with the service information. Refer to **VALVE, DIESEL EXHAUST FLUID ENGINE COOLANT CONTROL, REMOVAL** .
      - Perform the POWERTRAIN VERIFICATION TEST. Refer to **POWERTRAIN VERIFICATION TEST - 6.7L** .

P20B5-(DIESEL EXHAUST FLUID) REDUCTANT PUMP HEATER CONTROL CIRCUIT OPEN

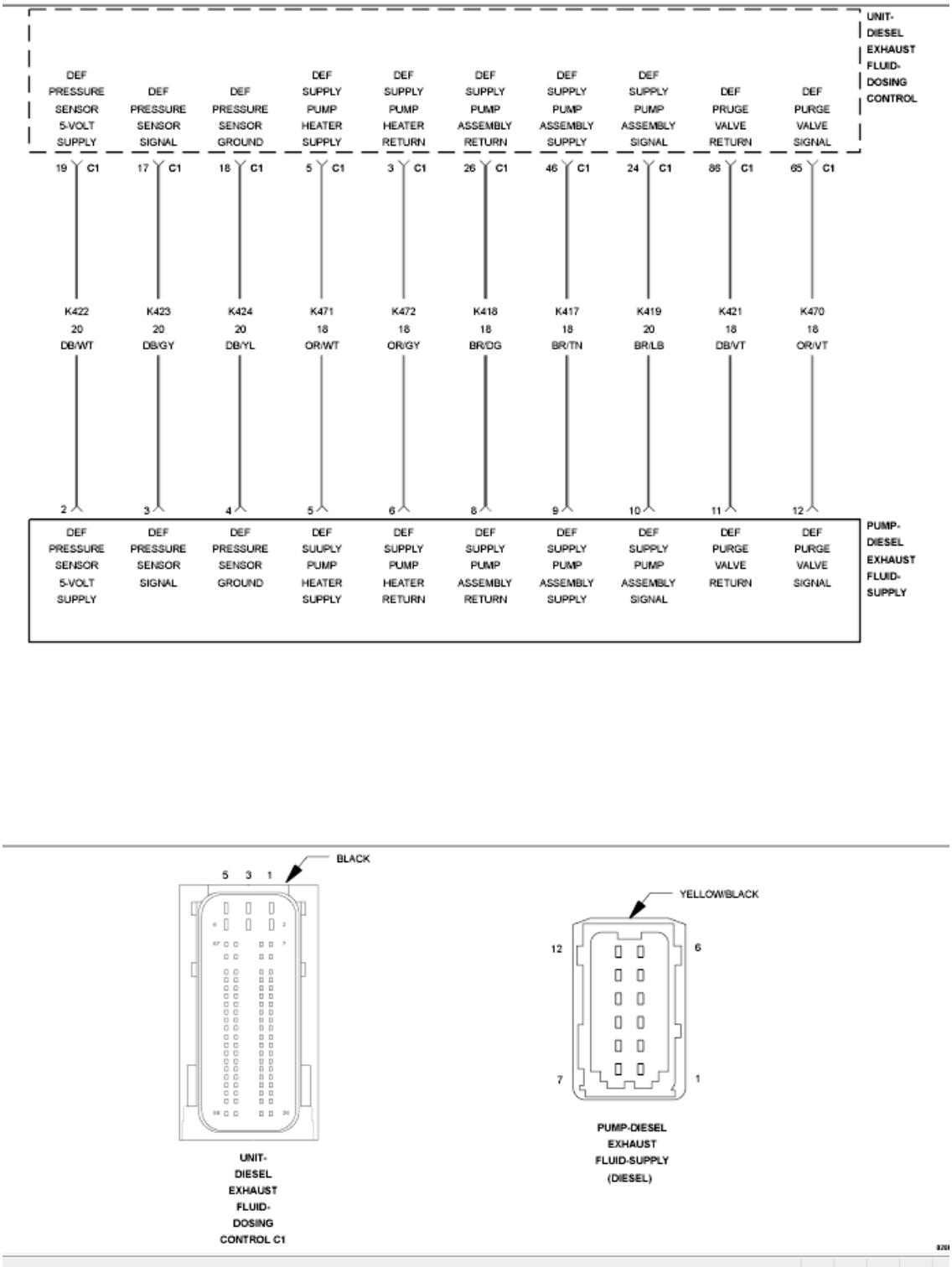

Fig. 106: Diesel Exhaust Fluid (DEF) Dosing Control Unit Wiring Diagram
Courtesy of CHRYSLER GROUP, LLC

For a complete wiring diagram, **refer to appropriate SYSTEM WIRING DIAGRAMS article** .

THEORY OF OPERATION

The Diesel Exhaust Fluid (DEF) Supply Pump Assembly has an internal heater to prevent the fluid from freezing inside the pump. The power supply and control circuits are controlled by the DEF Dosing Control Unit. The DEF Supply Pump Heater is integrated into the DEF Supply Pump Assembly and is not serviced separately. The DEF Dosing Control Unit will illuminate the MIL light via the Powertrain Control Module (PCM) immediately after the diagnostics runs and fails and the line heater will be disabled. The DEF Dosing Control Unit will turn off the MIL light via the PCM when the monitor runs and passes in three consecutive key cycles.

WHEN MONITORED:

Continuously with the ignition on.

SET CONDITION:

The DEF Dosing Control Unit detects that the DEF Supply Pump heater circuit is open or shorted to ground.

POSSIBLE CAUSES

Possible Causes
(K471) DEF SUPPLY PUMP HEATER SUPPLY CIRCUIT OPEN/HIGH RESISTANCE
(K472) DEF SUPPLY PUMP HEATER RETURN CIRCUIT OPEN/HIGH RESISTANCE
(K471) DEF SUPPLY PUMP HEATER SUPPLY CIRCUIT SHORTED TO GROUND
(K472) DEF SUPPLY PUMP HEATER RETURN CIRCUIT SHORTED TO GROUND
DEF SUPPLY PUMP ASSEMBLY
DEF DOSING CONTROL UNIT

Always perform the Pre-Diagnostic Troubleshooting procedure before proceeding. Refer to PRE-DIAGNOSTIC TROUBLESHOOTING PROCEDURE - 6.7L .

DIAGNOSTIC TEST

1. **ACTIVE DTC**
    1. Turn the ignition on, engine not running.
    2. With the scan tool, navigate to Actuator Tests and actuate the DEF Supply Pump Heater.
    3. With the scan tool, View DTCs.

    Is the DTC active?

    Yes

    - Go To 2.

    No

- Perform the INTERMITTENT CONDITION diagnostic procedure. Refer to **INTERMITTENT CONDITION - 6.7L** .

2. **CHECK THE RESISTANCE OF THE DEF SUPPLY PUMP HEATER**
   1. Turn the ignition off.
   2. Disconnect the DEF Supply Pump Assembly harness connector.
   3. Measure the resistance across the terminals of the DEF Supply Pump Heater circuits at the DEF Supply Pump Assembly.

      Is the resistance above 2.0 Ohms?

      Yes

      - Go To 3.

      No

      - Replace the DEF Supply Pump Assembly in accordance with the service information. Refer to **ASSEMBLY, DIESEL EXHAUST FLUID PUMP, REMOVAL** .
      - Perform the POWERTRAIN VERIFICATION TEST. Refer to **POWERTRAIN VERIFICATION TEST - 6.7L** .
3. **CHECK THE (K472) DEF SUPPLY PUMP HEATER RETURN CIRCUIT FOR A SHORT TO GROUND**

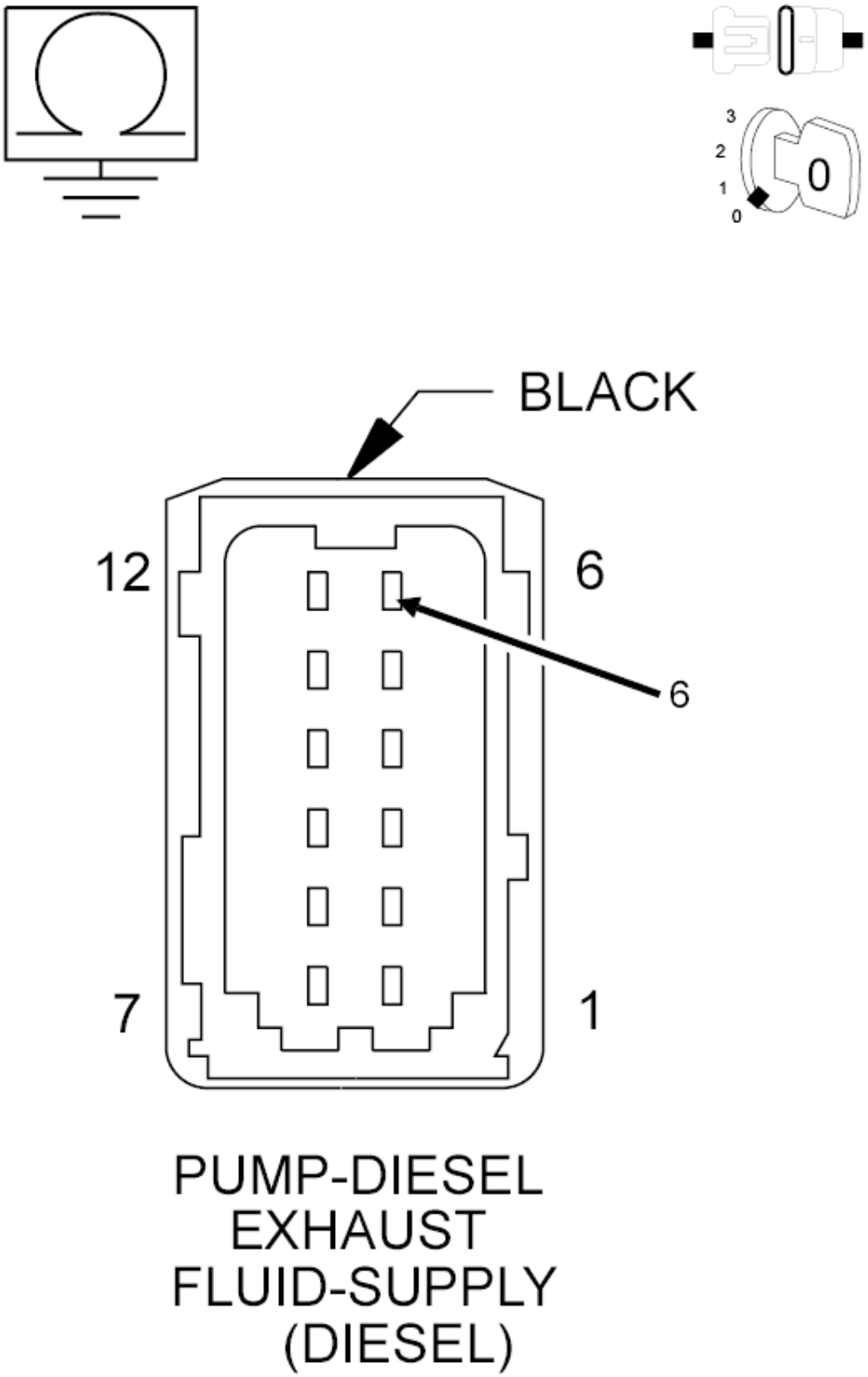

Fig. 107: Checking DEF Supply Pump Heater Return Circuit For A Short To Ground
Courtesy of CHRYSLER GROUP, LLC

1. Disconnect the DEF Dosing Control Unit C1 harness connector.
2. Measure the resistance between ground and the (K472) DEF Supply Pump Heater Return circuit at the DEF Supply Pump Assembly harness connector.

   Is the resistance above 10k Ohms?

   Yes

   - Go To 4.

   No

   - Repair the (K472) DEF Supply Pump Heater Return circuit for a short to ground.
   - Perform the POWERTRAIN VERIFICATION TEST. Refer to **POWERTRAIN VERIFICATION TEST - 6.7L** .

4. **CHECK THE (K471) DEF SUPPLY PUMP HEATER SUPPLY CIRCUIT FOR A SHORT TO GROUND**

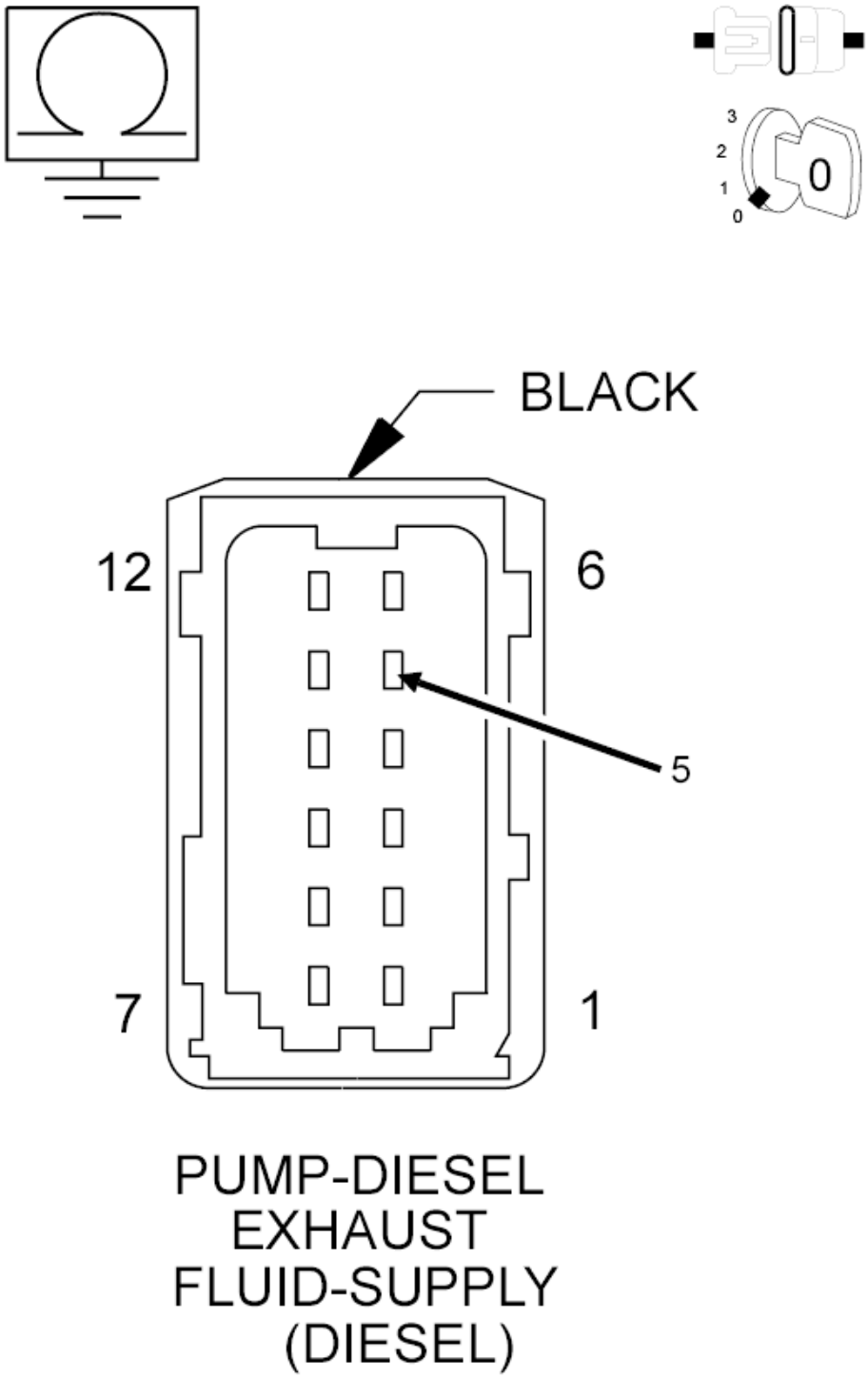

Fig. 108: Checking DEF Supply Pump Heater Supply Circuit For A Short To Ground
Courtesy of CHRYSLER GROUP, LLC

1. Disconnect the DEF Dosing Control Unit C1 harness connector.
2. Measure the resistance between ground and the (K471) DEF Supply Pump Heater Supply circuit at

the DEF Supply Pump Assembly harness connector.

Is the resistance above 10k Ohms?

Yes

- Go To 5.

No

- Repair the (K471) DEF Supply Pump Heater Supply circuit for a short to ground.
- Perform the POWERTRAIN VERIFICATION TEST. Refer to **POWERTRAIN VERIFICATION TEST - 6.7L** .

5. **CHECK THE (K472) DEF SUPPLY PUMP HEATER RETURN CIRCUIT FOR AN OPEN/HIGH RESISTANCE**

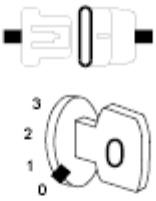

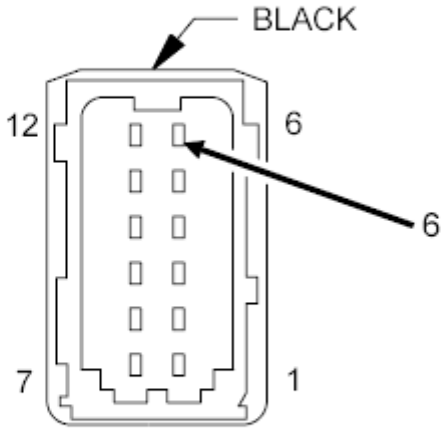

PUMP-DIESEL EXHAUST FLUID-SUPPLY (DIESEL)

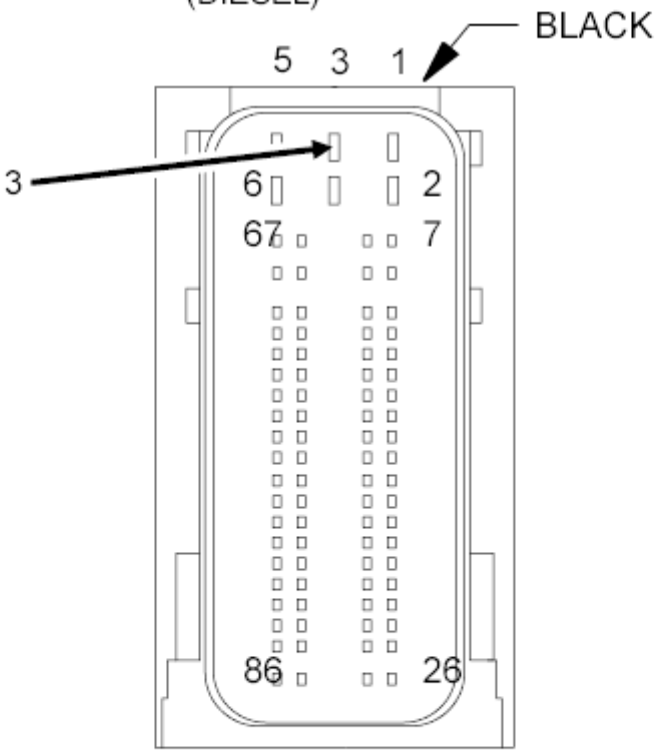

UNIT-DIESEL EXHAUST FLUID-DOSING

Fig. 109: Checking DEF Supply Pump Heater Return Circuit For An Open/High Resistance
Courtesy of CHRYSLER GROUP, LLC

1. Measure the resistance of the (K472) DEF Supply Pump Heater Return circuit between the DEF Supply Pump Assembly harness connector and the DEF Dosing Control Unit C1 harness connector.

   Is the resistance below 5.0 Ohms?

   Yes

   - Go To 6.

   No

   - Repair the (K472) DEF Supply Pump Heater Return circuit for an open or high resistance.
   - Perform the POWERTRAIN VERIFICATION TEST. Refer to **POWERTRAIN VERIFICATION TEST - 6.7L** .

6. **CHECK THE (K471) DEF SUPPLY PUMP HEATER SUPPLY CIRCUIT FOR AN OPEN/HIGH RESISTANCE**

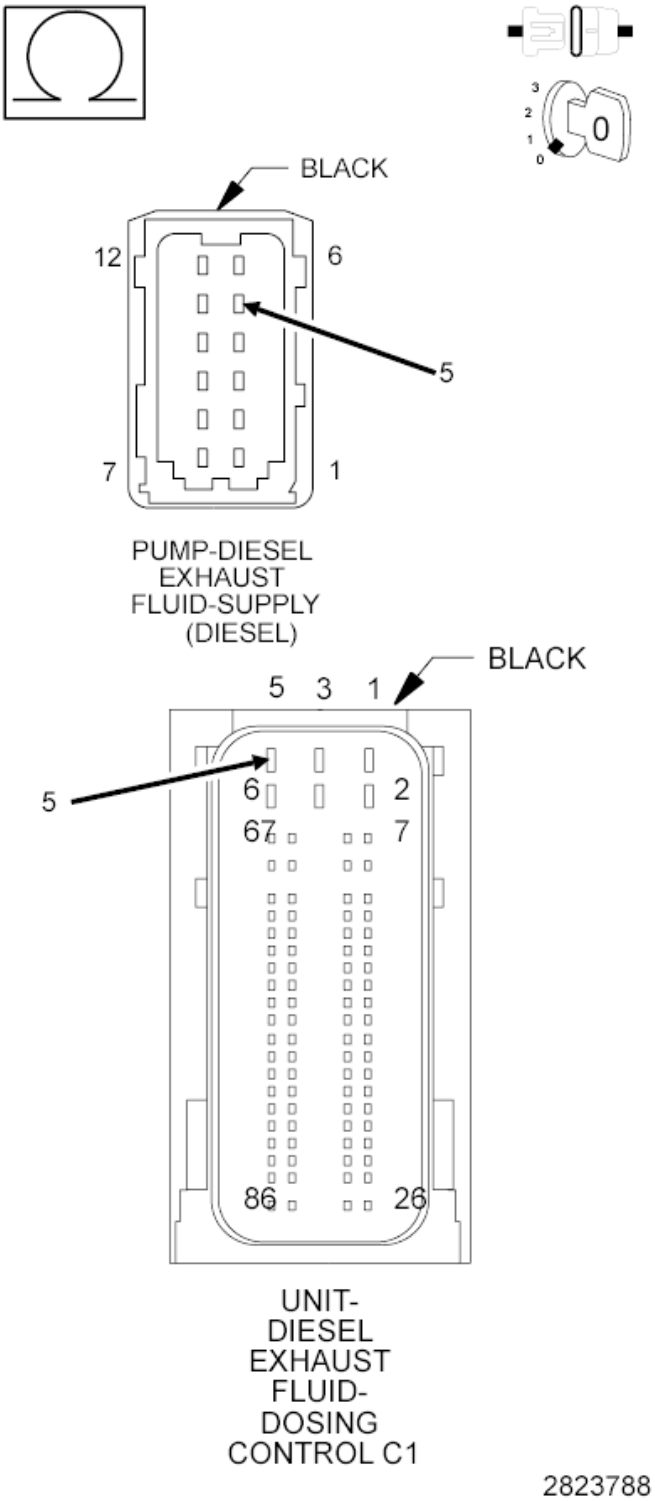

Fig. 110: Checking DEF Supply Pump Heater Supply Circuit For An Open Or High Resistance
Courtesy of CHRYSLER GROUP, LLC

1. Measure the resistance of the (K471) DEF Supply Pump Heater Supply circuit between the DEF Supply Pump Assembly harness connector and the DEF Dosing Control Unit C1 harness connector.

Is the resistance below 5.0 Ohms?

Yes

- Replace the DEF Dosing Control Unit in accordance with the service information. Refer to **UNIT, DIESEL EXHAUST FLUID DOSING CONTROL, REMOVAL** .
- Perform the POWERTRAIN VERIFICATION TEST. Refer to **POWERTRAIN VERIFICATION TEST - 6.7L** .

No

- Repair the (K471) DEF Supply Pump Heater Supply circuit for an open or high resistance.
- Perform the POWERTRAIN VERIFICATION TEST. Refer to **POWERTRAIN VERIFICATION TEST - 6.7L** .

P20B7-(DIESEL EXHAUST FLUID) REDUCTANT PUMP HEATER CONTROL CIRCUIT LOW

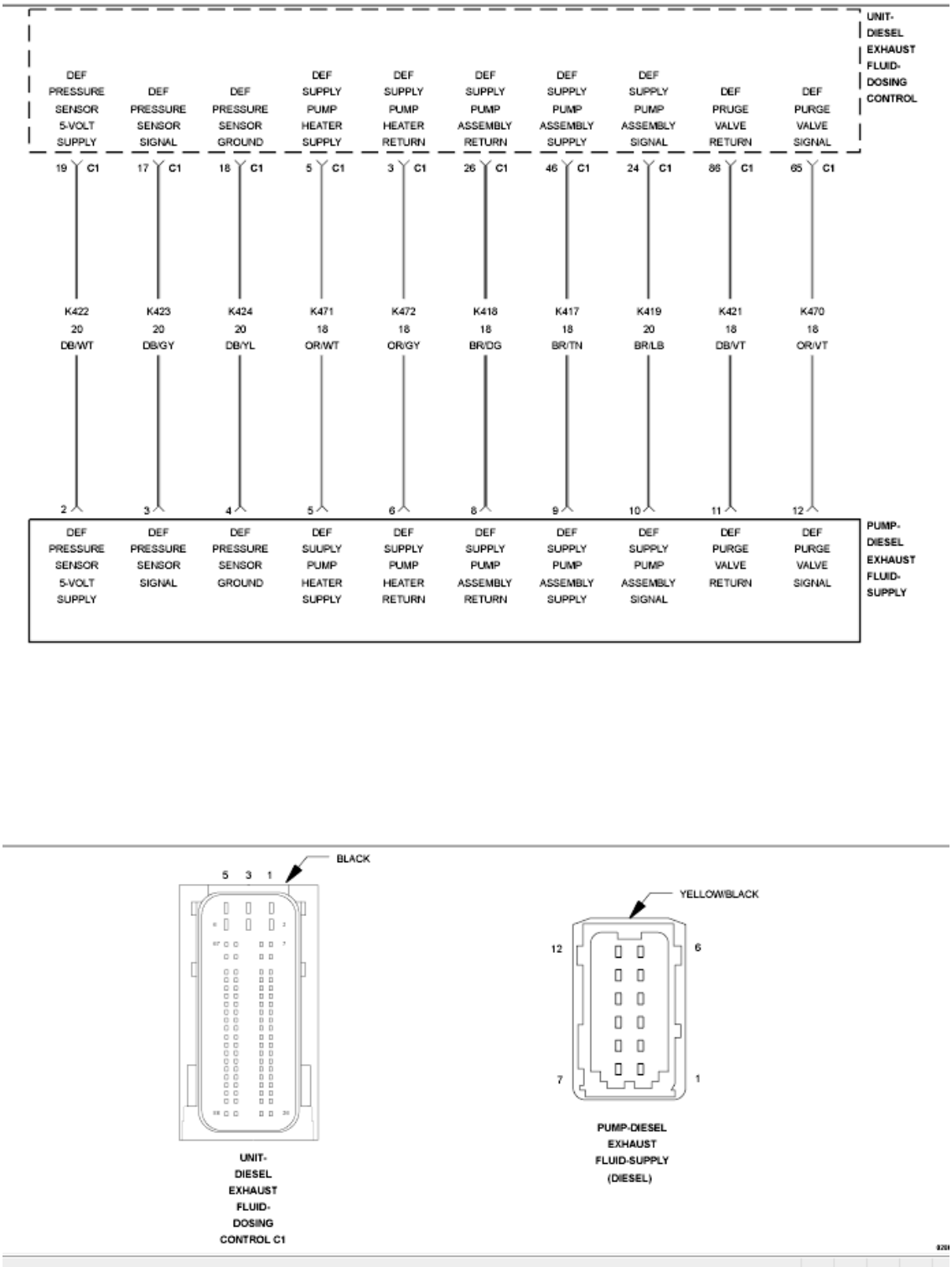

Fig. 111: Diesel Exhaust Fluid (DEF) Dosing Control Unit Wiring Diagram
Courtesy of CHRYSLER GROUP, LLC

For a complete wiring diagram, **refer to appropriate SYSTEM WIRING DIAGRAMS article** .

THEORY OF OPERATION

The Diesel Exhaust Fluid (DEF) Supply Pump Assembly has an internal heater to prevent the fluid from freezing inside the pump. The power supply and control circuits are controlled by the DEF Dosing Control Unit. The DEF Supply Pump Heater is integrated into the DEF Supply Pump Assembly and is not serviced separately. The DEF Dosing Control Unit will illuminate the MIL light via the Powertrain Control Module (PCM) immediately after the diagnostics runs and fails and the line heater will be disabled. The DEF Dosing Control Unit will turn off the MIL light via the PCM when the monitor runs and passes in three consecutive key cycles.

WHEN MONITORED:

Continuously with the ignition on.

SET CONDITION:

The DEF Dosing Control Unit detects that the DEF Supply Pump heater circuit is shorted to ground.

POSSIBLE CAUSES

Possible Causes
(K471) DEF SUPPLY PUMP HEATER SUPPLY CIRCUIT SHORTED TO GROUND
(K472) DEF SUPPLY PUMP HEATER RETURN CIRCUIT SHORTED TO GROUND
DEF SUPPLY PUMP ASSEMBLY
DEF DOSING CONTROL UNIT

Always perform the Pre-Diagnostic Troubleshooting procedure before proceeding. Refer to PRE-DIAGNOSTIC TROUBLESHOOTING PROCEDURE - 6.7L .

DIAGNOSTIC TEST

1. **ACTIVE DTC**
    1. Turn the ignition on, engine not running.
    2. With the scan tool, navigate to Actuator Tests and actuate the DEF Supply Pump Heater.
    3. With the scan tool, View DTCs.

    Is the DTC Active?

    Yes

    - Go To 2.

    No

    - Perform the INTERMITTENT CONDITION diagnostic procedure. Refer to **INTERMITTENT CONDITION - 6.7L** .

2. **CHECK THE RESISTANCE OF THE DEF SUPPLY PUMP HEATER**
    1. Turn the ignition off.
    2. Disconnect the DEF Supply Pump Assembly harness connector.
    3. Measure the resistance across the terminals of the DEF Supply Pump Heater circuits at the DEF Supply Pump Assembly.

    Is the resistance above 2.0 Ohms?

    Yes

    - Go To 3.

    No

    - Replace the DEF Supply Pump Assembly in accordance with the service information. Refer to **ASSEMBLY, DIESEL EXHAUST FLUID PUMP, REMOVAL** .
    - Perform the POWERTRAIN VERIFICATION TEST. Refer to **POWERTRAIN VERIFICATION TEST - 6.7L** .
3. **CHECK THE (K472) DEF SUPPLY PUMP HEATER RETURN CIRCUIT FOR A SHORT TO GROUND**

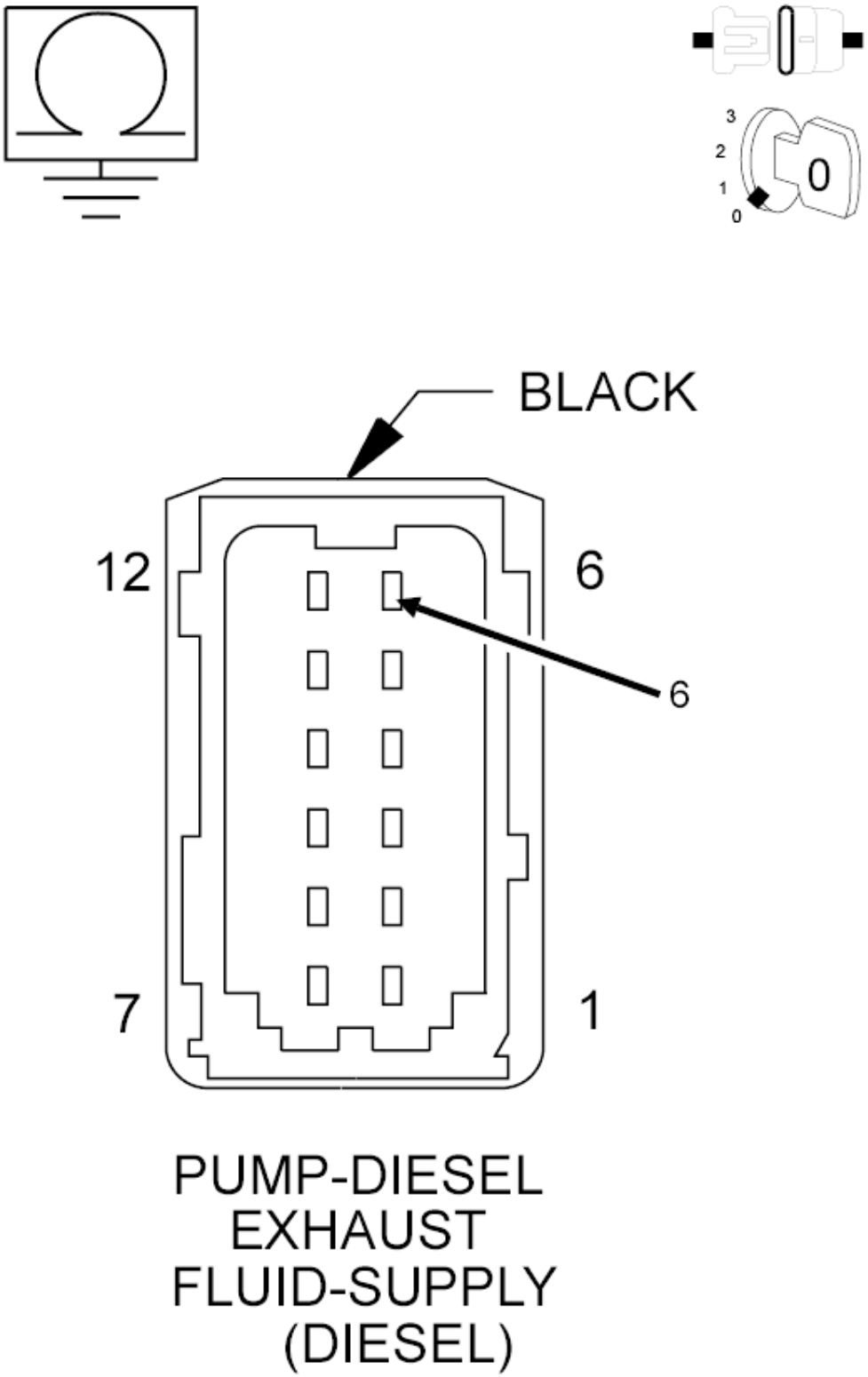

Fig. 112: Checking DEF Supply Pump Heater Return Circuit For A Short To Ground
Courtesy of CHRYSLER GROUP, LLC

1. Disconnect the DEF Dosing Control Unit C1 harness connector.
2. Measure the resistance between ground and the (K472) DEF Supply Pump Heater Return circuit at the DEF Supply Pump Assembly harness connector.

   Is the resistance above 10k Ohms?

   Yes

   - Go To 4.

   No

   - Repair the (K472) DEF Supply Pump Heater Return circuit for a short to ground.
   - Perform the POWERTRAIN VERIFICATION TEST. Refer to **POWERTRAIN VERIFICATION TEST - 6.7L** .

4. **CHECK THE (K471) DEF SUPPLY PUMP HEATER SUPPLY CIRCUIT FOR A SHORT TO GROUND**

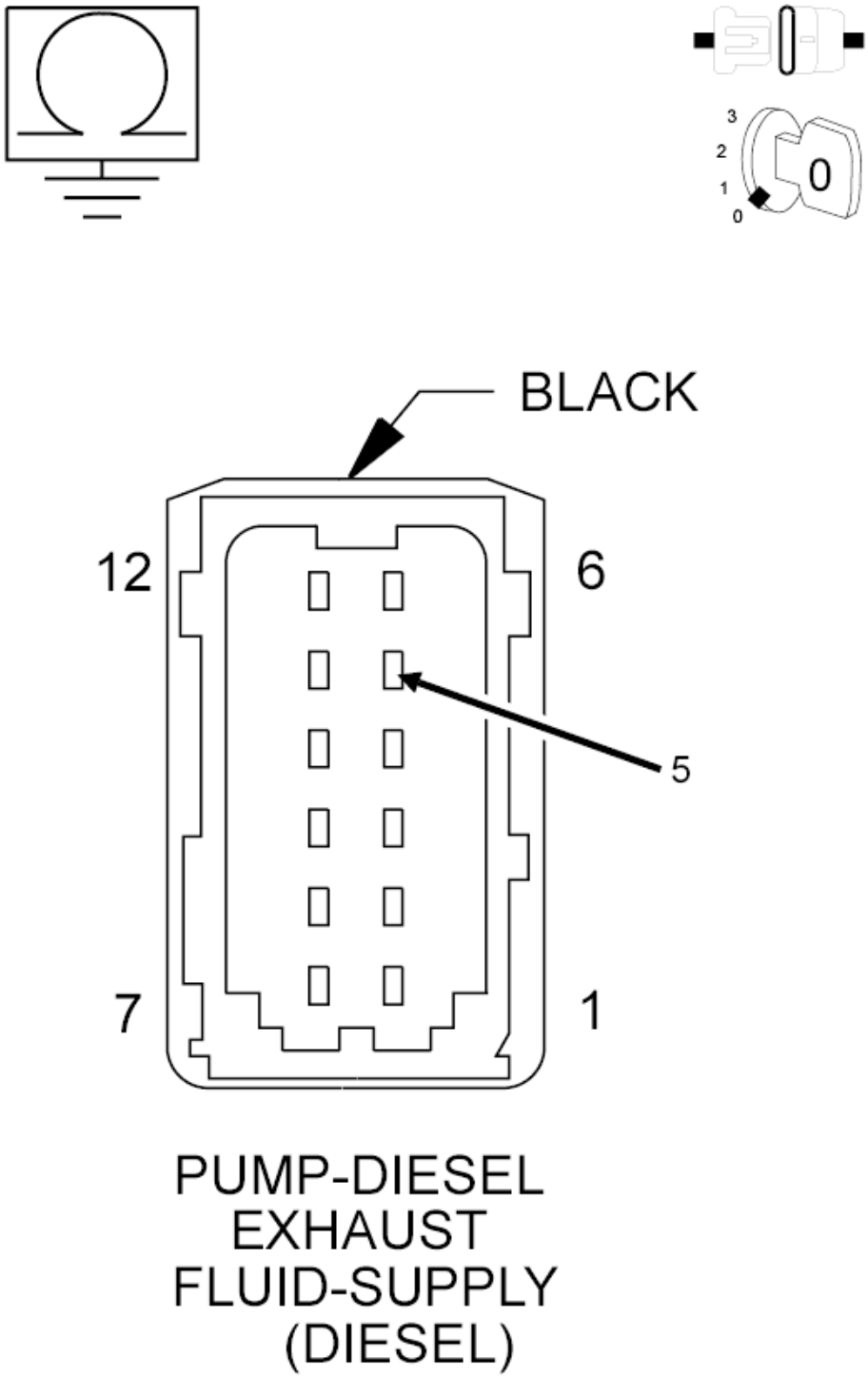

Fig. 113: Checking DEF Supply Pump Heater Supply Circuit For A Short To Ground
Courtesy of CHRYSLER GROUP, LLC

1. Disconnect the DEF Dosing Control Unit C1 harness connector.
2. Measure the resistance between ground and the (K471) DEF Supply Pump Heater Supply circuit at

the DEF Supply Pump Assembly harness connector.

Is the resistance above 10k Ohms?

Yes

- Replace the DEF Dosing Control Unit in accordance with the service information. Refer to **UNIT, DIESEL EXHAUST FLUID DOSING CONTROL, REMOVAL** .
- Perform the POWERTRAIN VERIFICATION TEST. Refer to **POWERTRAIN VERIFICATION TEST - 6.7L** .

No

- Repair the (K471) DEF Supply Pump Heater Supply circuit for a short to ground.
- Perform the POWERTRAIN VERIFICATION TEST. Refer to **POWERTRAIN VERIFICATION TEST - 6.7L** .

P20B8-(DIESEL EXHAUST FLUID) REDUCTANT PUMP HEATER CONTROL CIRCUIT HIGH

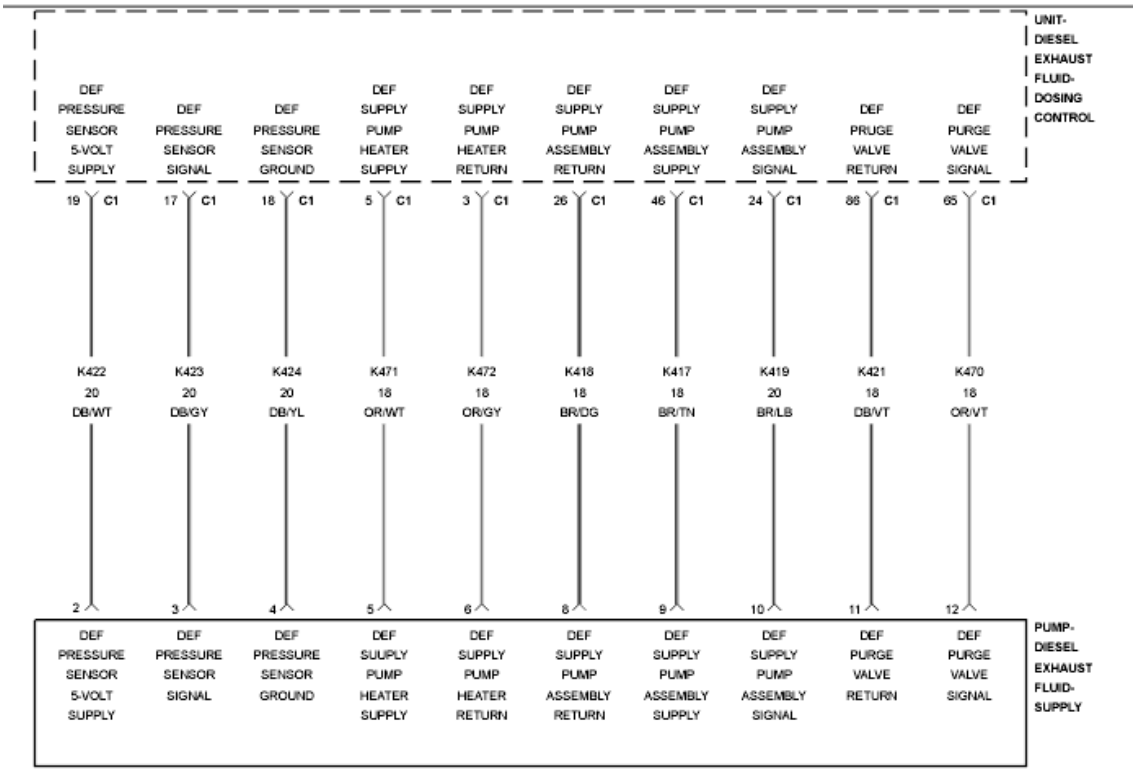

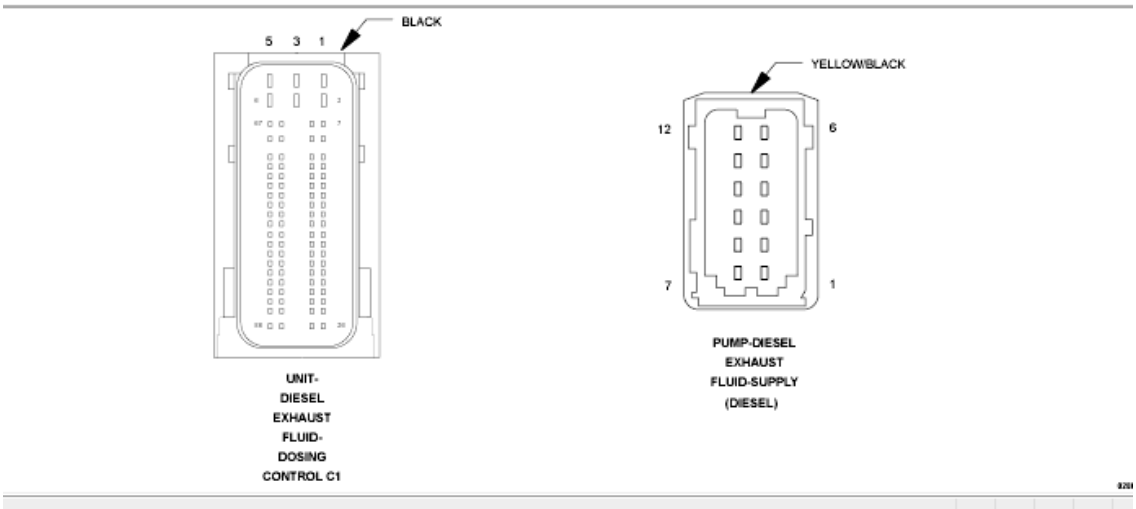

Fig. 114: Diesel Exhaust Fluid (DEF) Dosing Control Unit Wiring Diagram
Courtesy of CHRYSLER GROUP, LLC

For a complete wiring diagram, **refer to appropriate SYSTEM WIRING DIAGRAMS article** .

THEORY OF OPERATION

The Diesel Exhaust Fluid (DEF) Supply Pump Assembly has an internal heater to prevent the fluid from freezing inside the pump. The power supply and control circuits are controlled by the DEF Dosing Control Unit. The DEF Supply Pump Heater is integrated into the DEF Supply Pump Assembly and is not serviced separately. The DEF Dosing Control Unit will illuminate the MIL light via the Powertrain Control Module (PCM) immediately after the diagnostics runs and fails and the line heater will be disabled. The DEF Dosing Control Module will turn off the MIL light via the PCM when the monitor runs and passes in three consecutive key cycles.

WHEN MONITORED:

Continuously with the ignition on, and the heater commanded on.

SET CONDITION:

The DEF Dosing Control Unit detects that the DEF Supply Pump heater circuit voltage is above a calibrated value.

POSSIBLE CAUSES

Possible Causes
(K471) DEF SUPPLY PUMP HEATER SUPPLY CIRCUIT SHORTED TO VOLTAGE
(K472) DEF SUPPLY PUMP HEATER RETURN CIRCUIT SHORTED TO VOLTAGE
DEF SUPPLY PUMP ASSEMBLY
DEF DOSING CONTROL UNIT

Always perform the Pre-Diagnostic Troubleshooting procedure before proceeding. Refer to PRE-DIAGNOSTIC TROUBLESHOOTING PROCEDURE - 6.7L .

DIAGNOSTIC TEST

1. **ACTIVE DTC**
    1. Turn the ignition on, engine not running.
    2. With the scan tool, navigate to Actuator Tests and actuate the DEF Supply Pump Heater.
    3. With the scan tool, View DTCs.

    Is the DTC Active?

    Yes

    - Go To 2.

    No

    - Perform the INTERMITTENT CONDITION diagnostic procedure. Refer to

INTERMITTENT CONDITION - 6.7L .

2. **CHECK THE RESISTANCE OF THE DEF SUPPLY PUMP HEATER**
    1. Turn the ignition off.
    2. Disconnect the DEF Supply Pump Assembly harness connector.
    3. Measure the resistance across the terminals of the DEF Supply Pump Heater circuits at the DEF Supply Pump Assembly.

    Is the resistance above 2.0 Ohms?

    Yes

    - Go To 3.

    No

    - Replace the DEF Supply Pump Assembly in accordance with the service information. Refer to **ASSEMBLY, DIESEL EXHAUST FLUID PUMP, REMOVAL** .
    - Perform the POWERTRAIN VERIFICATION TEST. Refer to **POWERTRAIN VERIFICATION TEST - 6.7L** .
3. **CHECK THE (K471) DEF SUPPLY PUMP HEATER SUPPLY CIRCUIT FOR A SHORT TO ANOTHER CIRCUIT**

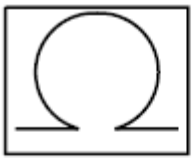

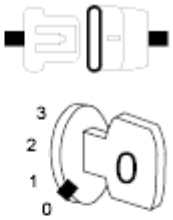

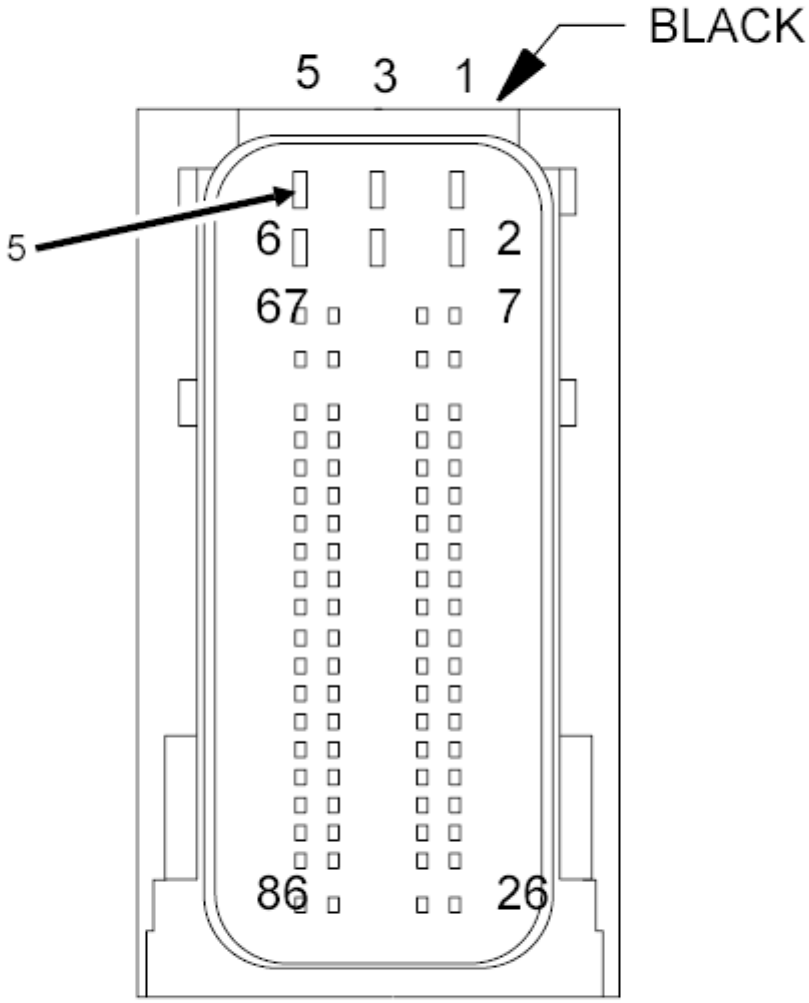

UNIT-
DIESEL
EXHAUST
FLUID-
DOSING
CONTROL C1

Fig. 115: Checking DEF Supply Pump Heater Supply Circuit For A Short
Courtesy of CHRYSLER GROUP, LLC

1. Disconnect the DEF Dosing Control Unit C1 harness connector.
2. Measure the resistance between the (K471) DEF Supply Pump Heater Supply circuit and all other circuits at the DEF Dosing Control Unit C1 harness connector.

   Is the resistance above 10k Ohms between the (K471) DEF Supply Pump Heater Supply circuit and all other circuits?

   Yes

   - Go To 4.

   No

   - Repair the short between the (K471) DEF Supply Pump Heater Supply circuit and the circuit that measured below 10k Ohms.
   - Perform the POWERTRAIN VERIFICATION TEST. Refer to **POWERTRAIN VERIFICATION TEST - 6.7L** .

4. **CHECK THE (K472) DEF SUPPLY PUMP HEATER RETURN CIRCUIT FOR A SHORT TO ANOTHER CIRCUIT**

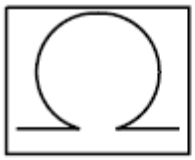

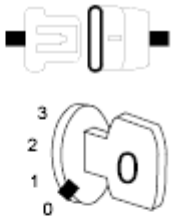

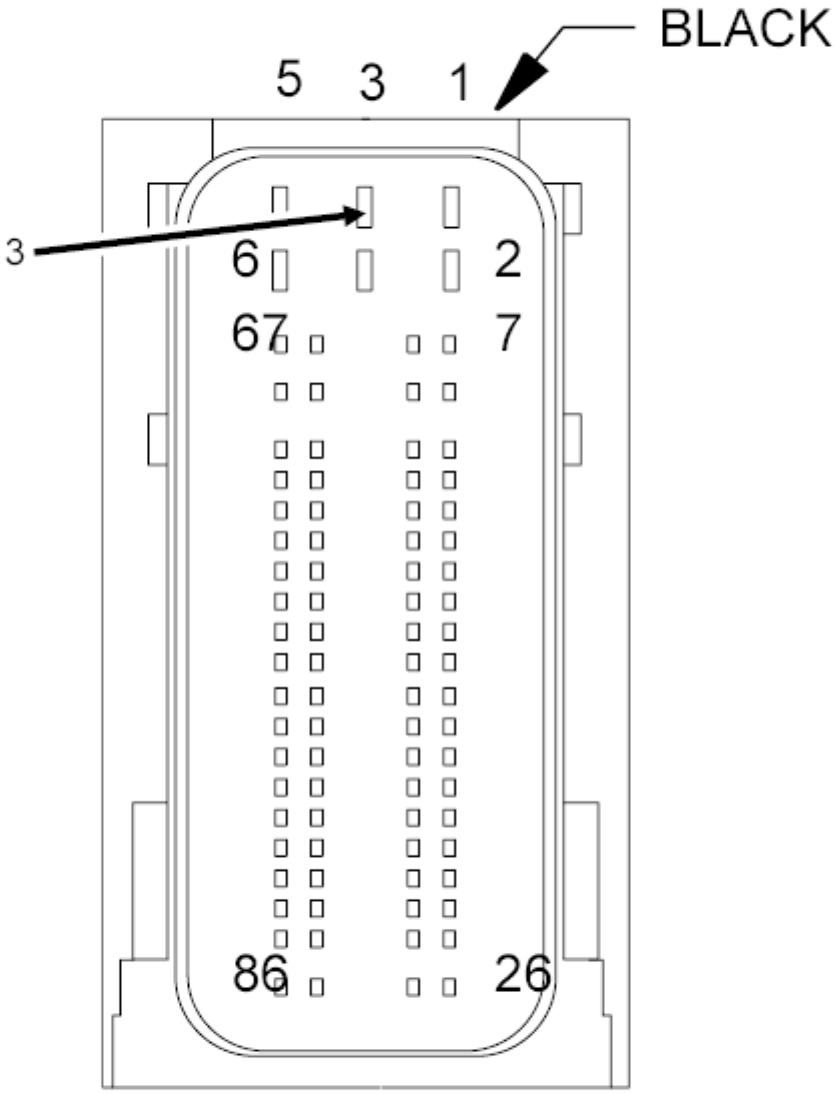

UNIT-
DIESEL
EXHAUST
FLUID-
DOSING
CONTROL C1

Fig. 116: Checking DEF Supply Pump Heater Return Circuit For A Short
Courtesy of CHRYSLER GROUP, LLC

1. Measure the resistance between the (K472) DEF Supply Pump Heater Return circuit and all other circuits at the DEF Dosing Control Unit C1 harness connector

   Is the resistance above 10k Ohms between the (K472) DEF Supply Pump Heater Return circuit and all other circuits?

   Yes

   - Replace the DEF Dosing Control Unit in accordance with the service information. Refer to **UNIT, DIESEL EXHAUST FLUID DOSING CONTROL, REMOVAL** .
   - Perform the POWERTRAIN VERIFICATION TEST. Refer to **POWERTRAIN VERIFICATION TEST - 6.7L** .

   No

   - Repair the short between the (K472) DEF Supply Pump Heater Return circuit and the circuit that measured below 10k Ohms.
   - Perform the POWERTRAIN VERIFICATION TEST. Refer to **POWERTRAIN VERIFICATION TEST - 6.7L** .

P20BD-(DIESEL EXHAUST FLUID) REDUCTANT PRESSURE LINE HEATER CONTROL CIRCUIT/OPEN

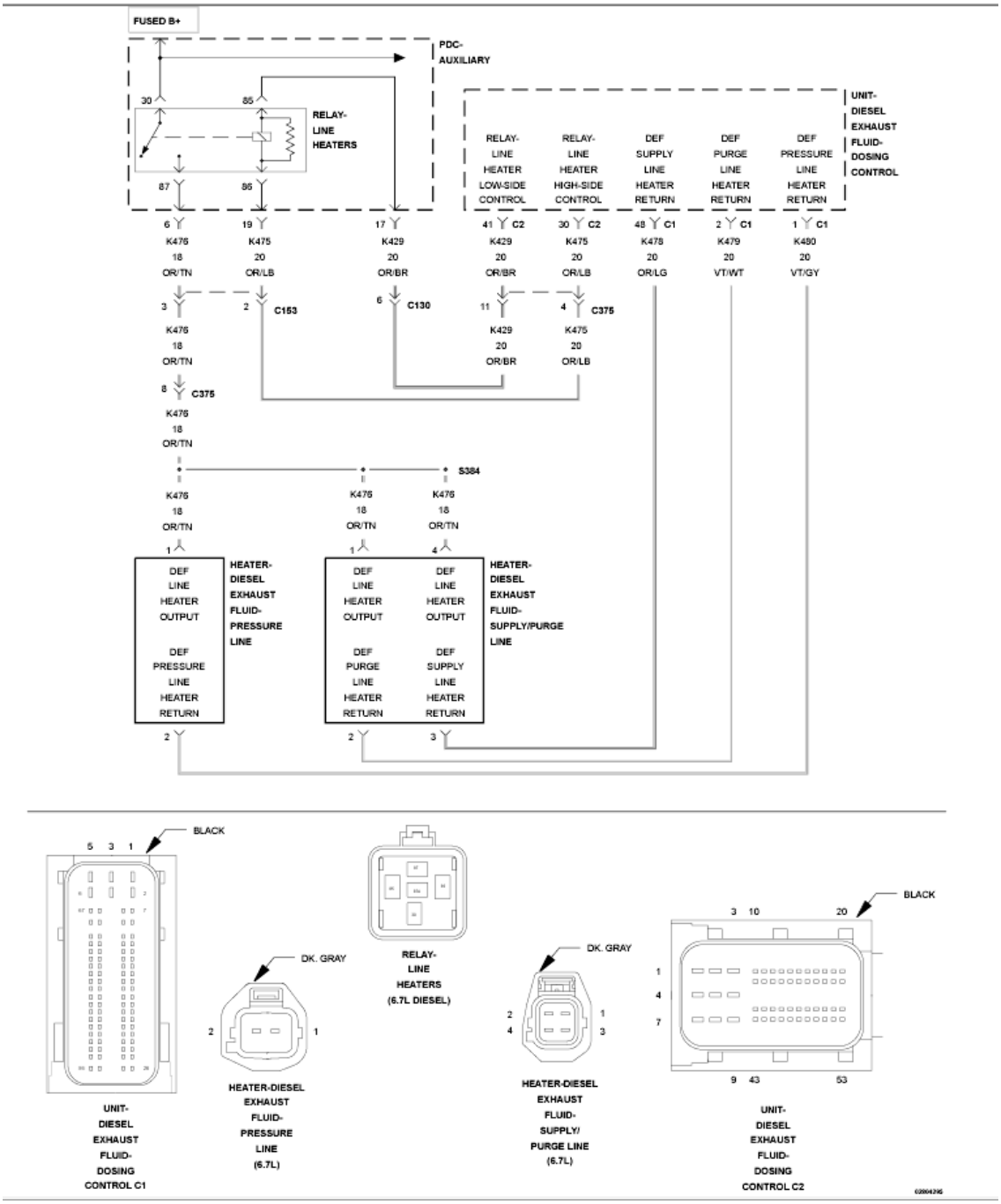

Fig. 117: Diesel Exhaust Fluid Reductant Line Heater Relay Control Circuit Wiring Diagram
Courtesy of CHRYSLER GROUP, LLC

For a complete wiring diagram, **refer to appropriate SYSTEM WIRING DIAGRAMS article** .

THEORY OF OPERATION

This DTC referring to the DEF Pressure Line Heater. Each of the Diesel Exhaust Fluid (DEF) system hoses has a built in heater to warm the fluid in the lines. The three line heaters share a common power supply via the DEF Line Heater Relay which is controlled by the DEF Dosing Control Unit. The DEF Dosing Control Unit controls

the heaters individually through the line heater return circuits. The three line heater circuits are monitored at the return circuit. The DEF Dosing Control Unit will illuminate the MIL light via the PCM immediately after the diagnostics runs and fails. The DEF Dosing Control Unit will turn off the MIL light via the PCM when the monitor runs and passes in three consecutive key cycles.

WHEN MONITORED:

When line heating is commanded on.

SET CONDITION:

The DEF Dosing Control Unit detects that the DEF Pressure Line heater circuit is open or shorted to ground.

POSSIBLE CAUSES

Possible Causes
(K476) DEF LINE HEATER OUTPUT CIRCUIT OPEN/HIGH RESISTANCE
(K478) DEF PRESSURE LINE HEATER RETURN CIRCUIT OPEN/HIGH RESISTANCE
(K478) DEF PRESSURE LINE HEATER RETURN CIRCUIT SHORTED TO GROUND
DEF LINE HEATER RELAY
DEF PRESSURE LINE HEATER
DEF DOSING CONTROL UNIT

Always perform the Pre-Diagnostic Troubleshooting procedure before proceeding. Refer to PRE-DIAGNOSTIC TROUBLESHOOTING PROCEDURE - 6.7L .

NOTE: **The DEF Line Heater monitor runs only when the DEF Line Heater Relay is commanded on. If the ambient temperature is too warm for the DEF Line Heaters to be turned on, the DTC will remain active and will not be able to be erased after repair is completed. Using the scan tool, navigate to Actuator Tests and actuate the Line Heater Relay test for the appropriate Line Heater to run the diagnostic and determine if the repair has been completed. If the repair is complete, the fault will move to stored and be able to be cleared with the scan tool.**

DIAGNOSTIC TEST

1. **CHECK FOR RELATED DTCS**
    1. Turn the ignition on.
    2. With the scan tool, View all active DTCs.

    Are the P20BD, P20B9 and P20C1 DTCs active together?

    Yes

    - Go To 2.

No

- Go To 4.

2. **CHECK THE (K476) DEF LINE HEATER OUTPUT CIRCUIT FOR AN OPEN/HIGH RESISTANCE**

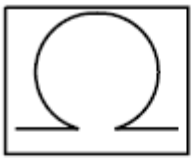

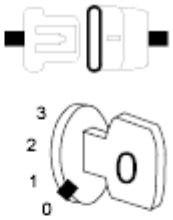

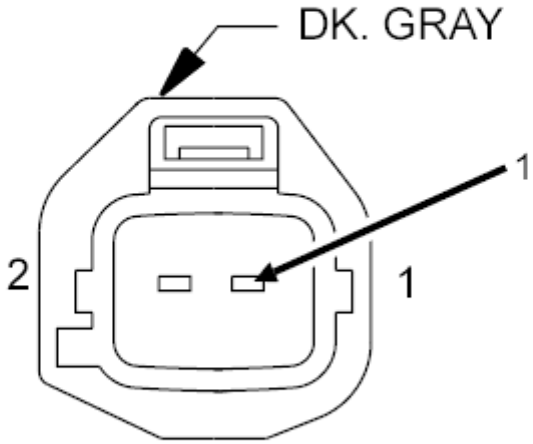

HEATER-DIESEL EXHAUST FLUID-PRESSURE LINE (6.7L)

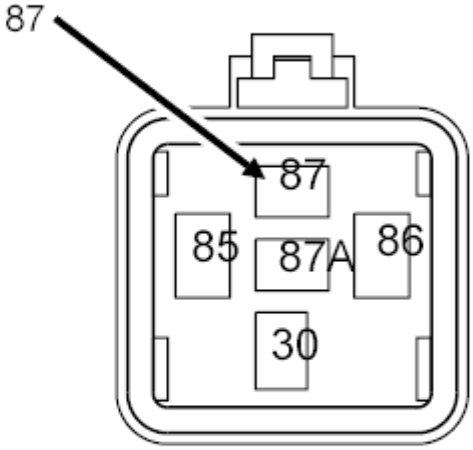

RELAY-LINE HEATERS (6.7L DIESEL)

Fig. 118: Checking DEF Line Heater Output Circuit For An Open/High Resistance
Courtesy of CHRYSLER GROUP, LLC

1. Turn the ignition off.
2. Remove the DEF Line Heater Relay.
3. Disconnect the DEF Pressure Line Heater harness connector.
4. Measure the resistance of the (K476) DEF Line Heater Output circuit between terminal 87 of the Line Heater Relay connector and the DEF Pressure Line Heater harness connector.

   Is the resistance below 5.0 Ohms?

   Yes

   - Go To 3.

   No

   - Repair the (K476) DEF Line Heater Relay Output circuit for an open or high resistance. If the circuit fuse is found to be open, check the (K476) DEF Line Heater Relay Output circuit for a short to ground.
   - Perform the POWERTRAIN VERIFICATION TEST. Refer to **POWERTRAIN VERIFICATION TEST - 6.7L** .

3. **CHECK THE DEF LINE HEATER**
   1. Reconnect the DEF Pressure Line Heater harness connector.
   2. Replace the DEF Line Heater Relay with a known good relay.
   3. Turn the ignition on.
   4. With the scan tool, Erase DTCs.
   5. With the scan tool, navigate to Systems Tests and actuate the DEF Pressure Line Heater.
   6. With the scan tool, View all active DTCs.

      Did the DTCs return?

      Yes

      - Using the wiring diagram as a guide, check the DEF Line Heater Relay control circuits for an open or short to ground.
      - Perform the POWERTRAIN VERIFICATION TEST. Refer to **POWERTRAIN VERIFICATION TEST - 6.7L** .

      No

      - Test complete.
      - Perform the POWERTRAIN VERIFICATION TEST. Refer to **POWERTRAIN VERIFICATION TEST - 6.7L** .

4. **CHECK THE (K476) DEF LINE HEATER OUTPUT CIRCUIT FOR AN OPEN/HIGH RESISTANCE**

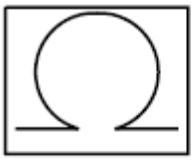

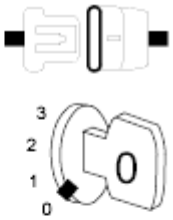

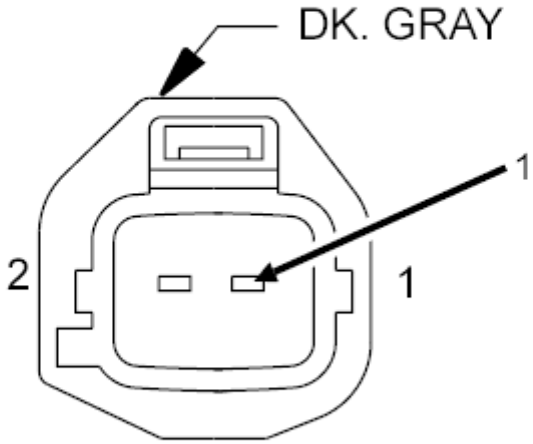

HEATER-DIESEL EXHAUST FLUID-PRESSURE LINE (6.7L)

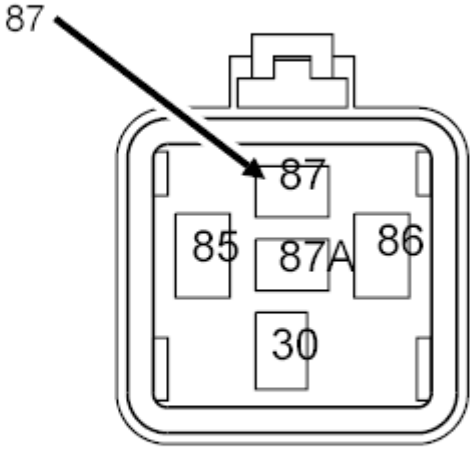

RELAY-LINE HEATERS (6.7L DIESEL)

Fig. 119: Checking DEF Line Heater Output Circuit For An Open/High Resistance
Courtesy of CHRYSLER GROUP, LLC

1. Turn the ignition off.
2. Remove the DEF Line Heater Relay.
3. Disconnect the DEF Pressure Line Heater harness connector.
4. Measure the resistance of the (K476) DEF Line Heater Output circuit between terminal 87 of the Line Heater Relay connector and the DEF Pressure Line Heater harness connector.

   Is the resistance below 5.0 Ohms?

   Yes

   - Go To 5.

   No

   - Repair the (K476) DEF Line Heater Relay Output circuit for an open or high resistance. If the circuit fuse is found to be open, check the (K476) DEF Line Heater Relay Output circuit for a short to ground.
   - Perform the POWERTRAIN VERIFICATION TEST. Refer to **POWERTRAIN VERIFICATION TEST - 6.7L** .

5. **CHECK THE (K478) DEF PRESSURE LINE HEATER RETURN CIRCUIT FOR AN OPEN/HIGH RESISTANCE**

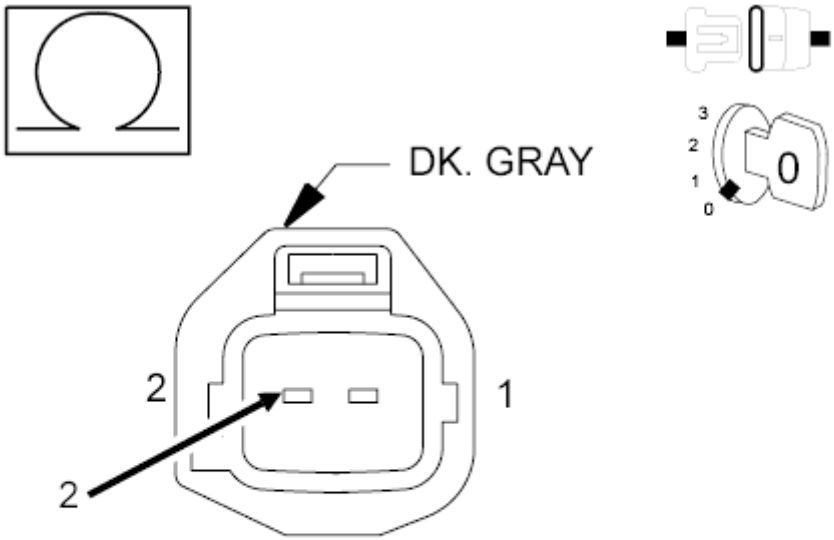

HEATER-DIESEL EXHAUST FLUID-PRESSURE LINE (6.7L)

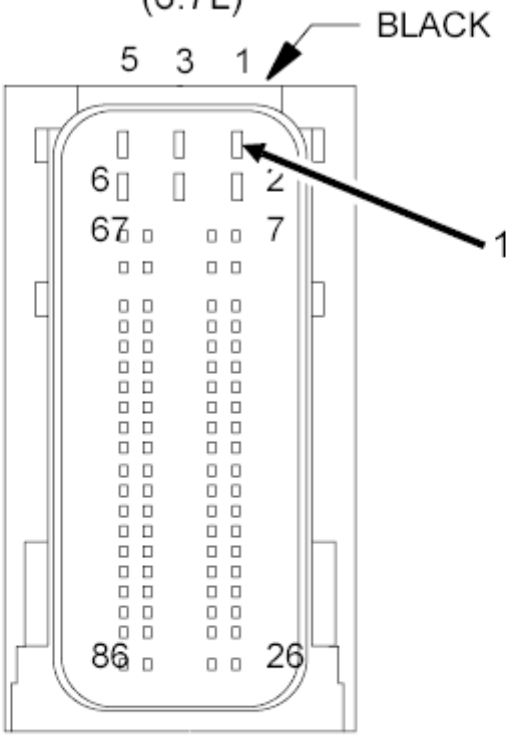

UNIT-DIESEL EXHAUST FLUID-DOSING

Fig. 120: Checking DEF Pressure Line Heater Return Circuit For An Open/High Resistance
Courtesy of CHRYSLER GROUP, LLC

1. Disconnect the DEF Dosing Control Unit C1 harness connector.
2. Measure the resistance of the (K478) DEF Pressure Line Heater Return circuit between the DEF Pressure Line Heater harness connector and the DEF Dosing Control Unit C1 harness connector.

   Is the resistance below 5.0 Ohms?

   Yes

   - Go To 6.

   No

   - Repair the (K478) DEF Pressure Line Heater Return circuit for an open or high resistance.
   - Perform the POWERTRAIN VERIFICATION TEST. Refer to **POWERTRAIN VERIFICATION TEST - 6.7L** .

6. **CHECK THE (K478) DEF PRESSURE LINE HEATER RETURN CIRCUIT FOR A SHORT TO GROUND**

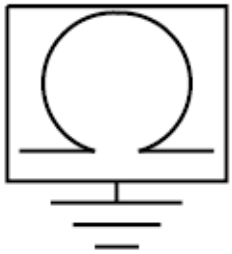

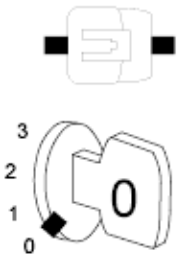

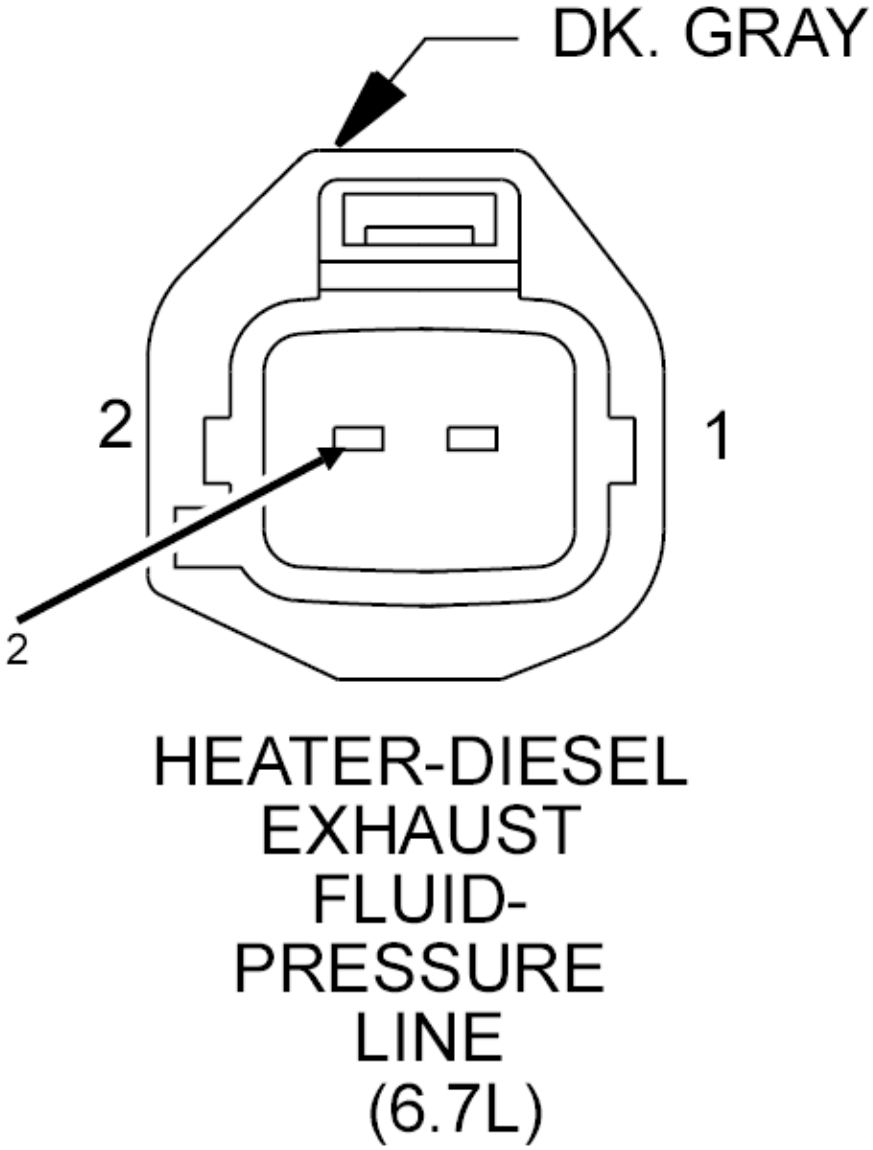

Fig. 121: Checking The DEF Pressure Line Heater Return Circuit For A Short To Ground
Courtesy of CHRYSLER GROUP, LLC

1. Measure the resistance between ground and the (K478) DEF Pressure Line Heater Return circuit at the DEF Pressure Line Heater harness connector.

   Is the resistance above 10k Ohms?

   Yes

   - Go To 7.

   No

   - Repair the (K478) DEF Pressure Line Heater Return circuit for a short to ground.
   - Perform the POWERTRAIN VERIFICATION TEST. Refer to **POWERTRAIN VERIFICATION TEST - 6.7L** .

7. **CHECK THE RESISTANCE OF THE DEF PRESSURE LINE HEATER**
   1. Measure the resistance across the terminals of the DEF Pressure Line Heater.

      Does the resistance measure between 5.7 Ohms and 6.9 Ohms?

      Yes

      - Replace the DEF Dosing Control Unit in accordance with the service information. Refer to **UNIT, DIESEL EXHAUST FLUID DOSING CONTROL, REMOVAL** .
      - Perform the POWERTRAIN VERIFICATION TEST. Refer to **POWERTRAIN VERIFICATION TEST - 6.7L** .

      No

      - Replace the DEF Pressure Line in accordance with the service information. Refer to **LINE, DIESEL EXHAUST FLUID PRESSURE, REMOVAL** .
      - Perform the POWERTRAIN VERIFICATION TEST. Refer to **POWERTRAIN VERIFICATION TEST - 6.7L** .

P20BE-(DIESEL EXHAUST FLUID) REDUCTANT PRESSURE LINE HEATER CONTROL CIRCUIT PERFORMANCE

For a complete wiring diagram, **refer to appropriate SYSTEM WIRING DIAGRAMS article** .

THEORY OF OPERATION

The Diesel Exhaust Fluid (DEF) Tank has an internal heating coil to help eliminate freezing of Diesel Exhaust Fluid. The DEF Dosing Control Unit monitors the temperature of the Diesel Exhaust Fluid inside the tank. When it is determined that the Diesel Exhaust Fluid needs to be heated, the DEF Dosing Control Unit opens the DEF Engine Coolant Valve which is located nest to the DEF Tank, and allows warm engine coolant to circulate through the heating coil inside the tank to warm the Diesel Exhaust Fluid in the tank. The DEF Dosing Control Unit will stop dosing fluid into the aftertreatment system and the purge the system. The DEF Dosing Control

Unit will illuminate the MIL lamp via the PCM immediately after this diagnostic runs and fails. The DEF Dosing Control Unit will turn off the MIL lamp via the PCM immediately after the diagnostic runs and passes for three consecutive key cycles.

WHEN MONITORED:

This monitor runs when the DEF Tank temperature is being maintained by using the DEF Tank Heater.

SET CONDITION:

There are two conditions that will set this DTC. The first is if the DEF Dosing Control Unit detects that the DEF Tank temperature drops from above defrosted temperature, 41°F (5°C) to below frozen temperature, 0°F. The second is if there are any line heater continuity faults present for any of the heater circuits in the system.

POSSIBLE CAUSES

Possible Causes
LOW ENGINE COOLANT LEVEL
DEF LINE HEATER OR SUPPLY PUMP ASSEMBLY DTCS PRESENT
RESTRICTED OR LEAKING COOLANT LINES TO THE DIESEL EXHAUST FLUID ENGINE COOLANT CONTROL VALVE
RESTRICTED OR LEAKING COOLANT LINES TO THE DIESEL EXHAUST FLUID TANK HEATER
DIESEL EXHAUST FLUID ENGINE COOLANT CONTROL VALVE PHYSICALLY STUCK CLOSED

Always perform the Pre-Diagnostic Troubleshooting procedure before proceeding. Refer to PRE-DIAGNOSTIC TROUBLESHOOTING PROCEDURE - 6.7L .

NOTE: **The DEF Line Heater monitor runs only when the DEF Line Heater Relay is commanded on. If the ambient temperature is too warm for the DEF Line Heaters to be turned on, the DTC will remain active and will not be able to be erased after repair is completed. Using the scan tool, navigate to Actuator Tests and actuate the Line Heater Relay test for the appropriate Line Heater to run the diagnostic and determine if the repair has been completed. If the repair is complete, the fault will move to stored and be able to be cleared with the scan tool.**

DIAGNOSTIC TEST

1. **CHECK THE ENGINE COOLANT LEVEL**

NOTE: **If there are DTCs present for the DEF Line Heaters or DEF Supply Pump Assembly Heater, perform those diagnostic procedures before continuing with this test procedure.**

1. Turn the ignition off.
2. Verify the engine coolant level.

   Is the engine coolant level above the minimum?

   Yes

   - Go To 2.

   No

   - Fill the engine coolant to the proper level.
   - Perform the POWERTRAIN VERIFICATION TEST. Refer to **POWERTRAIN VERIFICATION TEST - 6.7L** .

2. **CHECK FOR RESTRICTED OR LEAKING ENGINE COOLANT LINES/HOSES**
   1. Visually inspect the engine coolant supply and return lines for signs of a restriction or leaks.

      Were any restrictions or leaks found?

      Yes

      - Repair or replace the engine coolant lines in accordance with the service information.
      - Perform the POWERTRAIN VERIFICATION TEST. Refer to **POWERTRAIN VERIFICATION TEST - 6.7L** .

      No

      - Go To 3.

3. **CHECK FOR RESTRICTED DIESEL EXHAUST FLUID TANK HEATER**
   1. Remove the coolant lines at the DEF Tank Heater Coil.
   2. Blow regulated low pressure shop air through the DEF Tank Heater Coil.

      Were any restrictions found?

      Yes

      - Replace the DEF Tank Heater Coil in accordance with the service information. Refer to **SENSOR, DIESEL EXHAUST FLUID LEVEL/TEMPERATURE, REMOVAL** .
      - Perform the POWERTRAIN VERIFICATION TEST. Refer to **POWERTRAIN VERIFICATION TEST - 6.7L** .

      No

      - Replace the DEF Engine Coolant Control Valve in accordance with the service information. Refer to **VALVE, DIESEL EXHAUST FLUID ENGINE COOLANT CONTROL,**

REMOVAL .

- Perform the POWERTRAIN VERIFICATION TEST. Refer to **POWERTRAIN VERIFICATION TEST - 6.7L** .

P20BF-(DIESEL EXHAUST FLUID) REDUCTANT PRESSURE LINE HEATER CONTROL CIRCUIT LOW

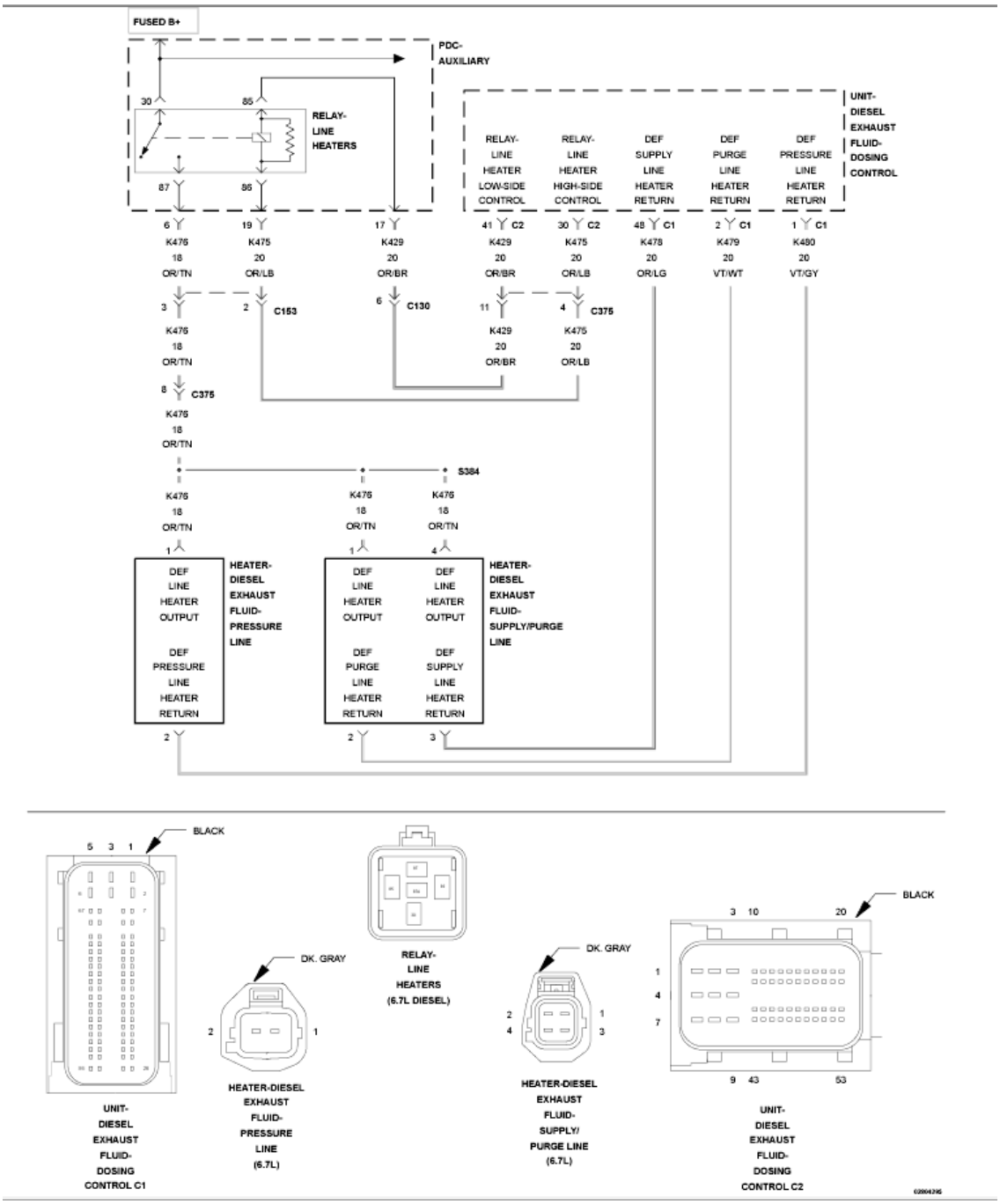

Fig. 122: Diesel Exhaust Fluid Reductant Line Heater Relay Control Circuit Wiring Diagram
Courtesy of CHRYSLER GROUP, LLC

For a complete wiring diagram, **refer to appropriate SYSTEM WIRING DIAGRAMS article** .

THEORY OF OPERATION

This DTC referring to the DEF Pressure Line Heater. Each of the Diesel Exhaust Fluid (DEF) system hoses has a built in heater to warm the fluid in the lines. The three line heaters share a common power supply via the DEF Line Heater Relay which is controlled by the DEF Dosing Control Unit. The DEF Dosing Control Unit controls the heaters individually through the line heater return circuits. The three line heater circuits are monitored at the return circuit. The DEF Dosing Control Unit will illuminate the MIL light via the PCM immediately after the diagnostics runs and fails. The DEF Dosing Control Unit will turn off the MIL light via the PCM when the monitor runs and passes in three consecutive key cycles.

WHEN MONITORED:

Continuously with the ignition on.

SET CONDITION:

The DEF Dosing Control Unit detects that the DEF Pressure Line heater circuit is open or shorted to ground.

POSSIBLE CAUSES

Possible Causes
(K478) DEF PRESSURE LINE HEATER RETURN CIRCUIT SHORTED TO GROUND
DEF PRESSURE LINE HEATER
DEF DOSING CONTROL UNIT

Always perform the Pre-Diagnostic Troubleshooting procedure before proceeding. Refer to PRE-DIAGNOSTIC TROUBLESHOOTING PROCEDURE - 6.7L .

NOTE: **The DEF Line Heater monitor runs only when the DEF Line Heater Relay is commanded on. If the ambient temperature is too warm for the DEF Line Heaters to be turned on, the DTC will remain active and will not be able to be erased after repair is completed. Using the scan tool, navigate to Actuator Tests and actuate the Line Heater Relay test for the appropriate Line Heater to run the diagnostic and determine if the repair has been completed. If the repair is complete, the fault will move to stored and be able to be cleared with the scan tool.**

DIAGNOSTIC TEST

1. **DTC ACTIVE**
    1. Turn the ignition on.
    2. With the scan tool, View all active DTCs.

    Is the DTC active?

Yes

- Go To 2.

No

- Perform the INTERMITTENT CONDITION diagnostic procedure. Refer to **INTERMITTENT CONDITION - 6.7L** .

2. **CHECK THE (K478) DEF PRESSURE LINE HEATER RETURN CIRCUIT FOR A SHORT TO GROUND**

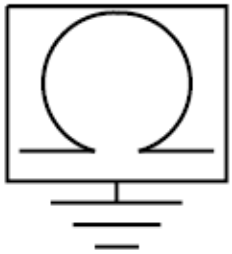

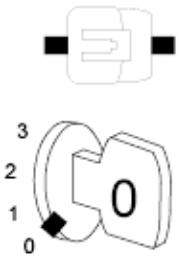

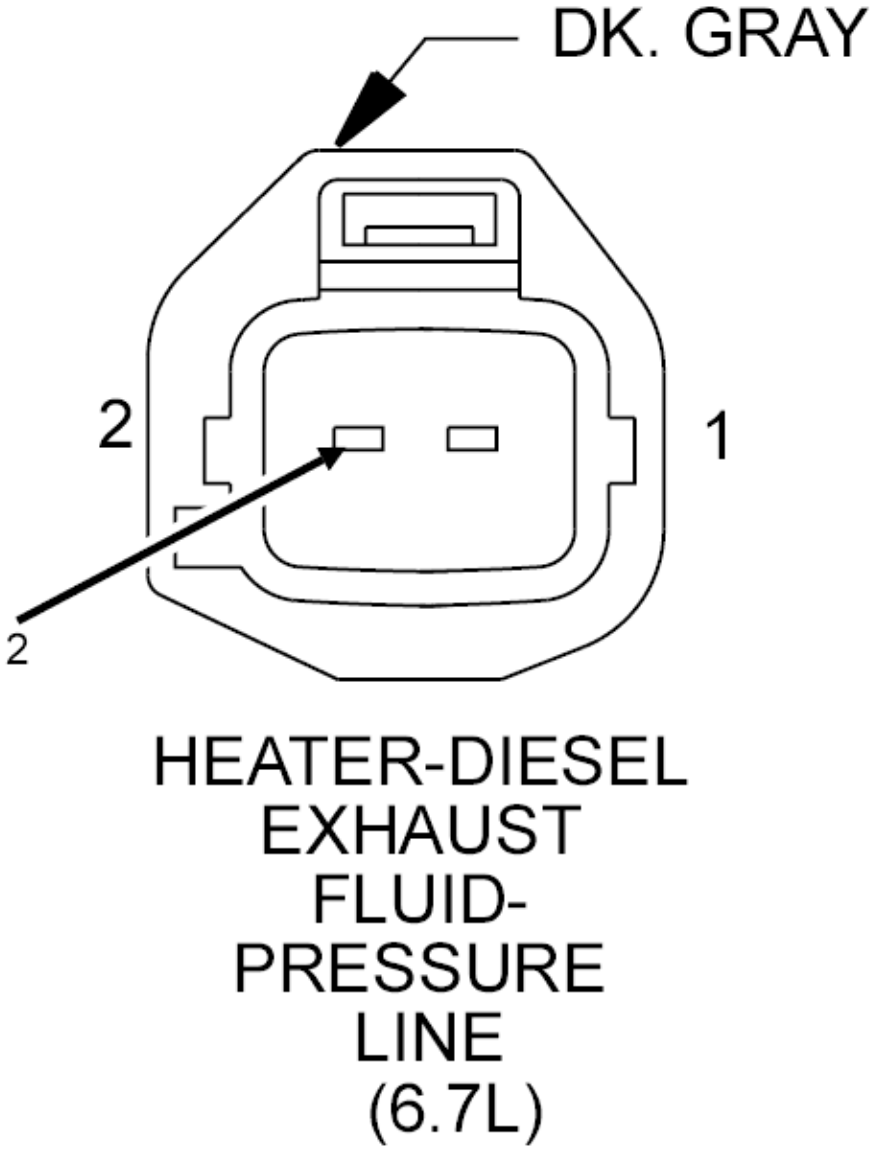

Fig. 123: Checking The DEF Pressure Line Heater Return Circuit For A Short To Ground
Courtesy of CHRYSLER GROUP, LLC

1. Turn the ignition off.
2. Disconnect the DEF Supply/Purge Line Heater harness connector.
3. Disconnect the DEF Dosing Control Unit C1 harness connector.
4. Measure the resistance between ground and the (K478) DEF Pressure Line Heater Return circuit at the DEF Pressure Line Heater harness connector.

   Is the resistance above 10k Ohms?

   Yes

   - Go To 3.

   No

   - Repair the (K478) DEF Pressure Line Heater Return circuit for a short to ground.
   - Perform the POWERTRAIN VERIFICATION TEST. Refer to **POWERTRAIN VERIFICATION TEST - 6.7L** .

3. **CHECK THE RESISTANCE OF THE DEF PRESSURE LINE HEATER**
   1. Measure the resistance across the terminals of the DEF Pressure Line Heater.

      Does the resistance measure between 5.74 Ohms and 6.88 Ohms?

      Yes

      - Replace the DEF Dosing Control Unit in accordance with the service information. Refer to **UNIT, DIESEL EXHAUST FLUID DOSING CONTROL, REMOVAL** .
      - Perform the POWERTRAIN VERIFICATION TEST. Refer to **POWERTRAIN VERIFICATION TEST - 6.7L** .

      No

      - Replace the DEF Pressure Line in accordance with the service information. Refer to **LINE, DIESEL EXHAUST FLUID PRESSURE, REMOVAL** .
      - Perform the POWERTRAIN VERIFICATION TEST. Refer to **POWERTRAIN VERIFICATION TEST - 6.7L** .

P20C0-(DIESEL EXHAUST FLUID) REDUCTANT PRESSURE LINE HEATER CONTROL CIRCUIT HIGH

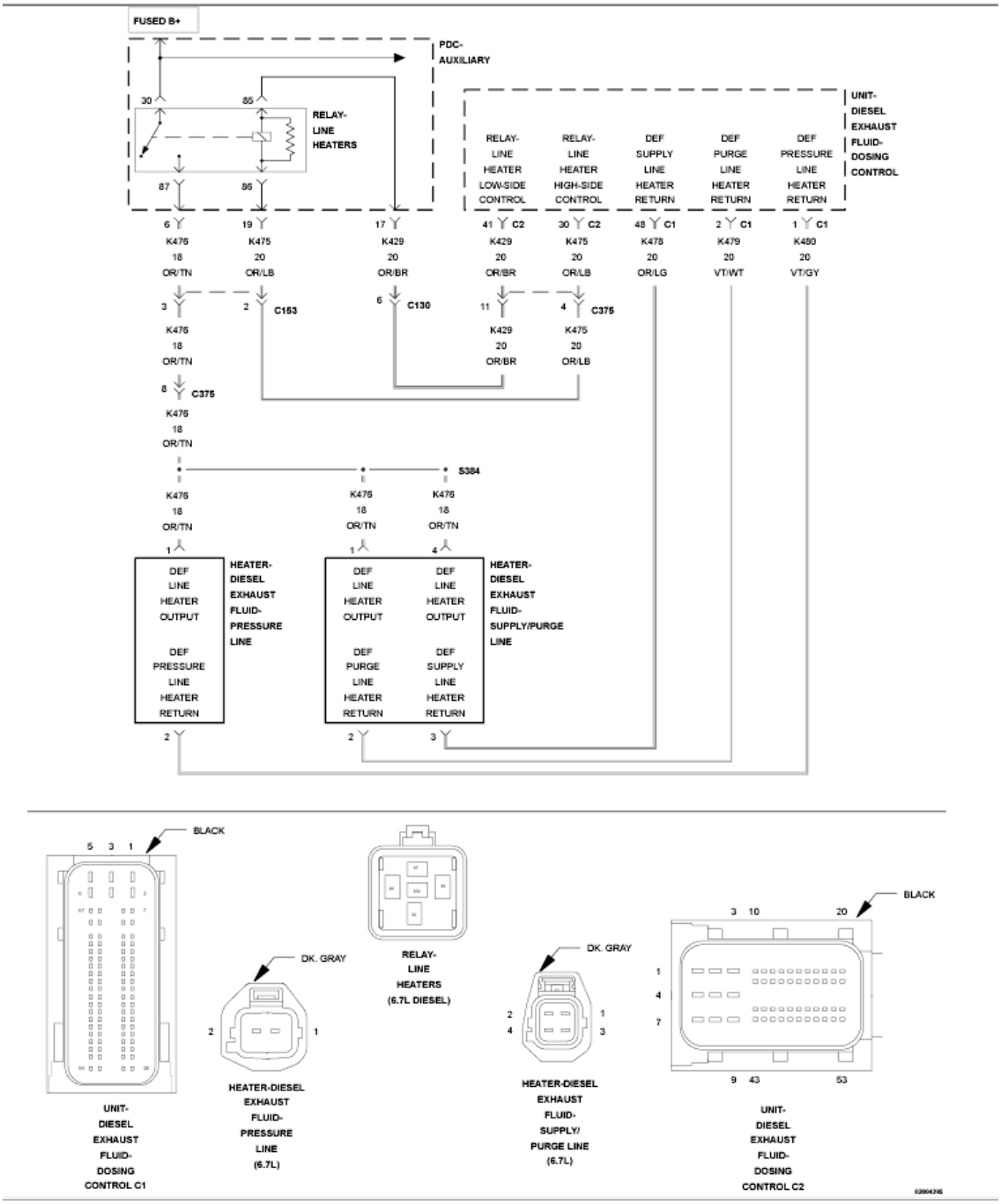

Fig. 124: Diesel Exhaust Fluid Reductant Line Heater Relay Control Circuit Wiring Diagram
Courtesy of CHRYSLER GROUP, LLC

For a complete wiring diagram, **refer to appropriate SYSTEM WIRING DIAGRAMS article** .

THEORY OF OPERATION

This DTC is referring to the DEF Pressure Line Heater. Each of the Diesel Exhaust Fluid (DEF) system hoses has a built in heater to warm the fluid in the lines. The three line heaters share a common power supply via the DEF Line Heater Relay which is controlled by the DEF Dosing Control Unit. The DEF Dosing Control Unit

controls the heaters individually through the line heater return circuits. The three line heater circuits are monitored at the return circuit. The DEF Dosing Control Unit will illuminate the MIL light via the PCM immediately after the diagnostics runs and fails and the line heater will be disabled. The DEF Dosing Control Unit will turn off the MIL light via the PCM when the monitor runs and passes in three consecutive key cycles.

WHEN MONITORED:

Continuously with the ignition on, and the heater commanded on.

SET CONDITION:

The DEF Dosing Control Unit detects that the DEF Pressure Line heater circuit voltage is above a calibrated value.

POSSIBLE CAUSES

Possible Causes
(K478) DEF PRESSURE LINE HEATER RETURN CIRCUIT SHORTED TO VOLTAGE
DEF PRESSURE LINE HEATER
DEF DOSING CONTROL UNIT

Always perform the Pre-Diagnostic Troubleshooting procedure before proceeding. Refer to PRE-DIAGNOSTIC TROUBLESHOOTING PROCEDURE - 6.7L .

NOTE: **The DEF Line Heater monitor runs only when the DEF Line Heater Relay is commanded on. If the ambient temperature is too warm for the DEF Line Heaters to be turned on, the DTC will remain active and will not be able to be erased after repair is completed. Using the scan tool, navigate to Actuator Tests and actuate the Line Heater Relay test for the appropriate Line Heater to run the diagnostic and determine if the repair has been completed. If the repair is complete, the fault will move to stored and be able to be cleared with the scan tool.**

DIAGNOSTIC TEST

1. **ACTIVE DTC**
    1. Turn the ignition on, engine not running.
    2. With the scan tool, navigate to Systems Tests and actuate the Pressure Line Heater.
    3. With the scan tool, View DTCs.

    Is the DTC active?

    Yes

    - Go To 2.

No

- Perform the INTERMITTENT CONDITION diagnostic procedure. Refer to **INTERMITTENT CONDITION - 6.7L** .

2. **CHECK THE RESISTANCE OF THE DEF PRESSURE LINE HEATER**
   1. Turn the ignition off.
   2. Disconnect the DEF Pressure Line Heater harness connector.
   3. Measure the resistance across the terminals of the DEF Pressure Line Heater.

   Does the resistance measure between 5.7 Ohms and 6.9 Ohms?

   Yes

   - Go To 3.

   No

   - Replace the DEF Pressure Line in accordance with the service information. Refer to **LINE, DIESEL EXHAUST FLUID PRESSURE, REMOVAL** .
   - Perform the POWERTRAIN VERIFICATION TEST. Refer to **POWERTRAIN VERIFICATION TEST - 6.7L** .

3. **CHECK THE (K478) DEF PRESSURE LINE HEATER RETURN CIRCUIT FOR A SHORT TO ANOTHER CIRCUIT**

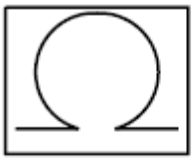

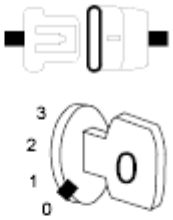

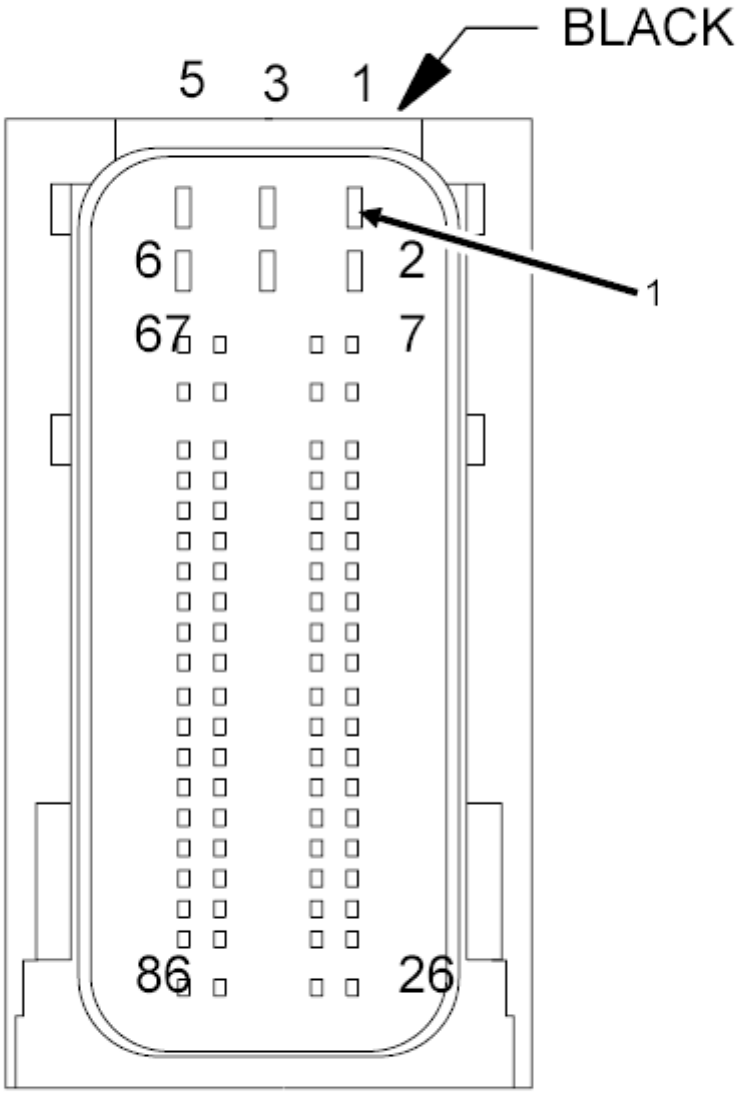

UNIT-
DIESEL
EXHAUST
FLUID-
DOSING
CONTROL C1

Fig. 125: Checking DEF Pressure Line Heater Return Circuit For A Short To Another Circuit
Courtesy of CHRYSLER GROUP, LLC

1. With the DEF Pressure Line Heater harness connector still disconnected, disconnect the DEF Dosing Control Unit C1 harness connector.
2. Measure the resistance between the (K478) DEF Pressure Line Heater Return circuit and all other circuits at the DEF Dosing Control Unit C1 harness connector.

   Is the resistance above 10k Ohms between the (K478) DEF Pressure Line Heater Return circuit and all other circuits?

   Yes

   - Replace the DEF Dosing Control Unit in accordance with the service information. Refer to **UNIT, DIESEL EXHAUST FLUID DOSING CONTROL, REMOVAL** .
   - Perform the POWERTRAIN VERIFICATION TEST. Refer to **POWERTRAIN VERIFICATION TEST - 6.7L** .

   No

   - Repair the short between the (K478) DEF Pressure Line Heater Return circuit and the circuit that measured below 10k Ohms.
   - Perform the POWERTRAIN VERIFICATION TEST. Refer to **POWERTRAIN VERIFICATION TEST - 6.7L** .

P20C1-(DIESEL EXHAUST FLUID) REDUCTANT RETURN LINE HEATER CONTROL CIRCUIT/OPEN

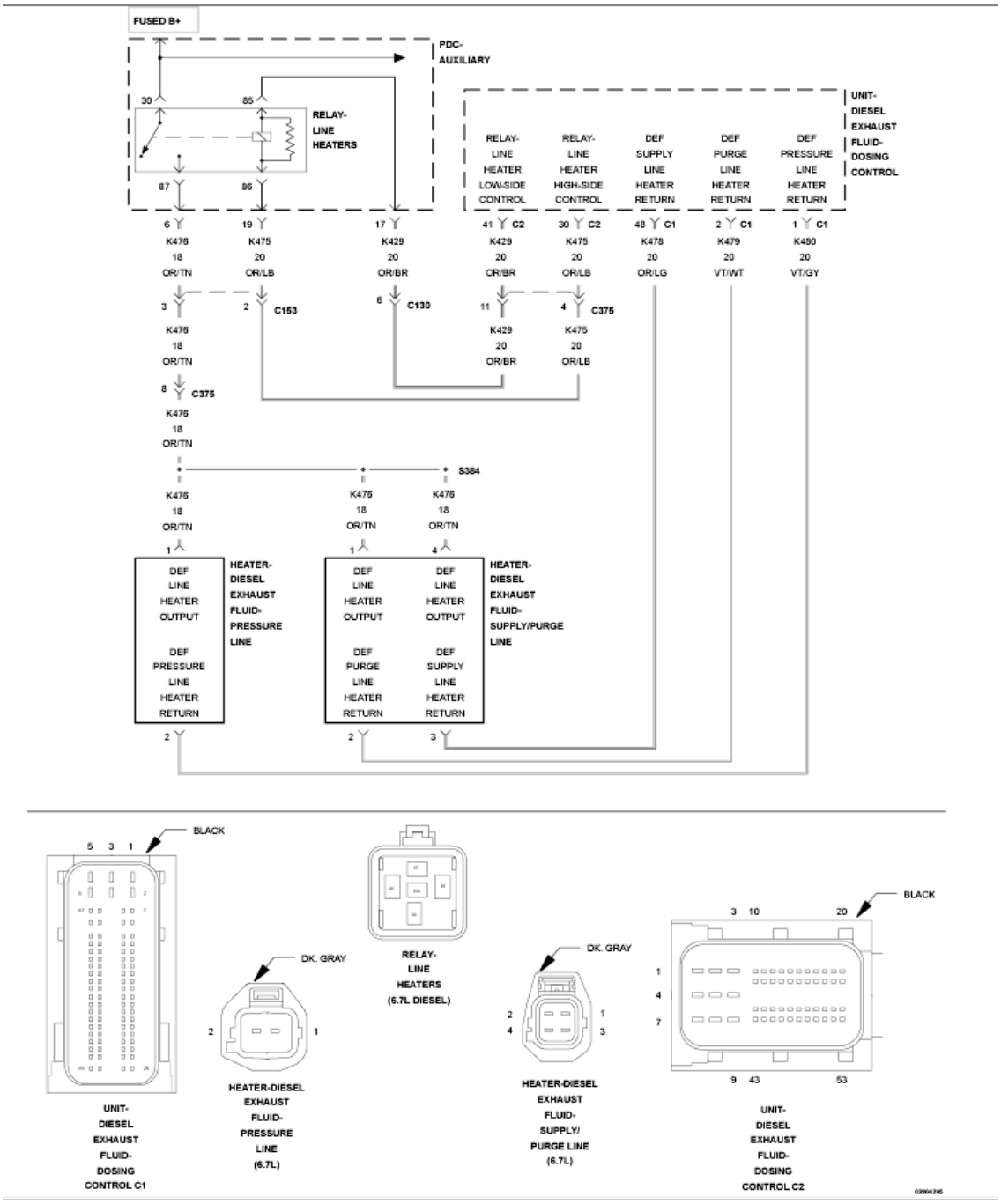

Fig. 126: Diesel Exhaust Fluid Reductant Line Heater Relay Control Circuit Wiring Diagram
Courtesy of CHRYSLER GROUP, LLC

For a complete wiring diagram, **refer to appropriate SYSTEM WIRING DIAGRAMS article** .

THEORY OF OPERATION

This DTC is referring to the DEF Supply/Purge Line Heaters. Each of the Diesel Exhaust Fluid (DEF) system hoses has a built in heater to warm the fluid in the lines. The three line heaters share a common power supply via the DEF Line Heater Relay which is controlled by the DEF Dosing Control Unit. The DEF Dosing Control

Unit controls the heaters individually through the line heater return circuits. The three line heater circuits are monitored at the return circuit. The DEF Dosing Control Unit will illuminate the MIL light via the PCM immediately after the diagnostics runs and fails. The DEF Dosing Control Unit will turn off the MIL light via the PCM when the monitor runs and passes in three consecutive key cycles.

WHEN MONITORED:

Continuously with the ignition on.

SET CONDITION:

The DEF Dosing Control Unit detects that the DEF Supply Line heater circuit or DEF Purge Line Heater circuit is open or shorted to ground.

POSSIBLE CAUSES

Possible Causes
(K476) DEF LINE HEATER OUTPUT CIRCUIT OPEN/HIGH RESISTANCE
(K480) DEF SUPPLY LINE HEATER RETURN CIRCUIT OPEN/HIGH RESISTANCE
(K479) DEF PURGE LINE HEATER RETURN CIRCUIT OPEN/HIGH RESISTANCE
(K480) DEF SUPPLY LINE HEATER RETURN CIRCUIT SHORTED TO GROUND
(K479) DEF PURGE LINE HEATER RETURN CIRCUIT SHORTED TO GROUND
DEF LINE HEATER RELAY
DEF SUPPLY/PURGE LINE HEATER
DEF DOSING CONTROL UNIT

Always perform the Pre-Diagnostic Troubleshooting procedure before proceeding. Refer to PRE-DIAGNOSTIC TROUBLESHOOTING PROCEDURE - 6.7L .

NOTE: **The DEF Line Heater monitor runs only when the DEF Line Heater Relay is commanded on. If the ambient temperature is too warm for the DEF Line Heaters to be turned on, the DTC will remain active and will not be able to be erased after repair is completed. Using the scan tool, navigate to Actuator Tests and actuate the Line Heater Relay test for the appropriate Line Heater to run the diagnostic and determine if the repair has been completed. If the repair is complete, the fault will move to stored and be able to be cleared with the scan tool.**

DIAGNOSTIC TEST

1. **CHECK FOR RELATED DTCS**
    1. Turn the ignition on.
    2. With the scan tool, View all active DTCs.

    Are the P20BD and P20C1 DTCs active together?

Yes

- Go To 2.

No

- Go To 4.

2. **CHECK THE (K476) DEF LINE HEATER OUTPUT CIRCUIT FOR AN OPEN/HIGH RESISTANCE**

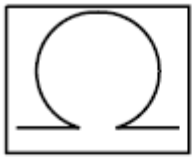

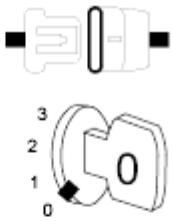

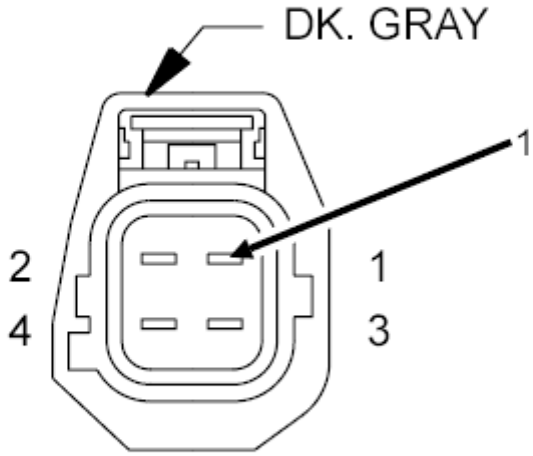

HEATER-DIESEL EXHAUST FLUID-SUPPLY/ PURGE LINE (6.7L)

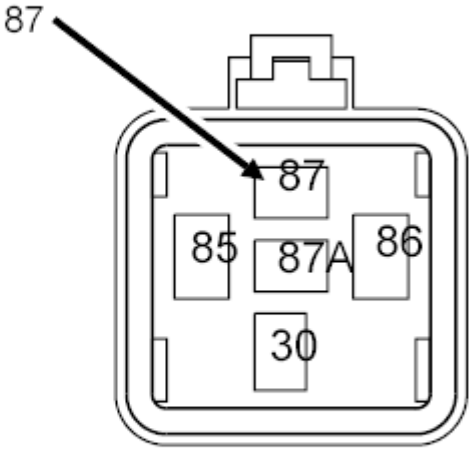

RELAY-LINE HEATERS (6.7L DIESEL)

Fig. 127: Checking DEF Line Heater Output Circuit For An Open Or High Resistance
Courtesy of CHRYSLER GROUP, LLC

1. Turn the ignition off.
2. Remove the DEF Line Heater Relay.
3. Disconnect the DEF Supply/Purge Line Heater harness connector.
4. Measure the resistance of the (K476) DEF Line Heater Output circuit between terminal 87 of the Line Heater Relay connector and the DEF Supply/Purge Line Heater harness connector.

   Is the resistance below 5.0 Ohms?

   Yes

   - Go To 3.

   No

   - Repair the (K476) DEF Line Heater Relay Output circuit for an open or high resistance. If the circuit fuse is found to be open, check the (K476) DEF Line Heater Relay Output circuit for a short to ground.
   - Perform the POWERTRAIN VERIFICATION TEST. Refer to **POWERTRAIN VERIFICATION TEST - 6.7L** .

3. **CHECK THE DEF LINE HEATER**
   1. Reconnect the DEF Supply/Purge Line Heater harness connector.
   2. Replace the DEF Line Heater Relay with a known good relay.
   3. Turn the ignition on.
   4. With the scan tool, Erase DTCs.
   5. With the scan tool, navigate to Systems Tests and actuate the DEF Supply and Purge Line Heaters.
   6. With the scan tool, View all active DTCs.

   Did the DTCs return?

   Yes

   - Using the wiring diagram as a guide, check the DEF Line Heater Relay control circuits for an open or short to ground.
   - Perform the POWERTRAIN VERIFICATION TEST. Refer to **POWERTRAIN VERIFICATION TEST - 6.7L** .

   No

   - Test complete.
   - Perform the POWERTRAIN VERIFICATION TEST. Refer to **POWERTRAIN VERIFICATION TEST - 6.7L** .

4. **CHECK THE (K476) DEF LINE HEATER OUTPUT CIRCUIT FOR AN OPEN/HIGH RESISTANCE**

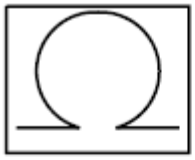

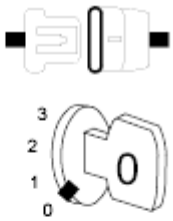

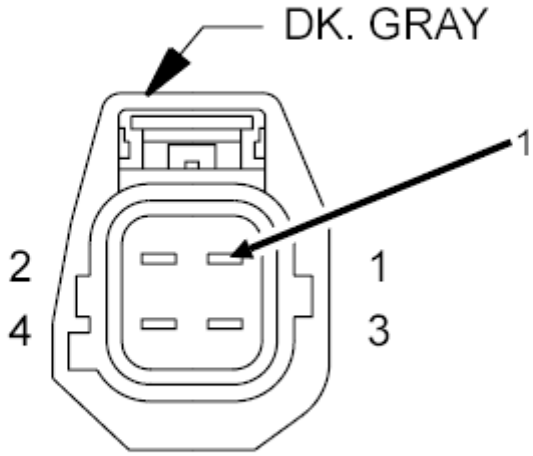

HEATER-DIESEL EXHAUST FLUID-SUPPLY/ PURGE LINE (6.7L)

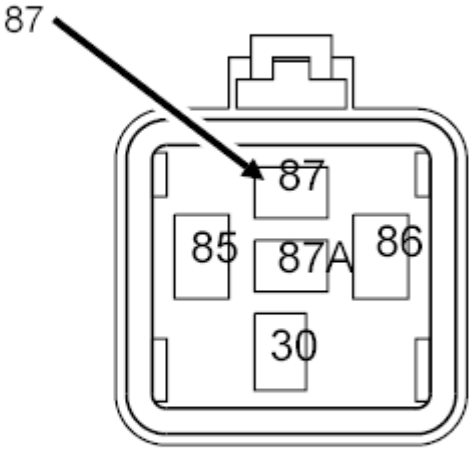

RELAY-LINE HEATERS (6.7L DIESEL)

Fig. 128: Checking DEF Line Heater Output Circuit For An Open Or High Resistance
Courtesy of CHRYSLER GROUP, LLC

1. Turn the ignition off.
2. Remove the DEF Line Heater Relay.
3. Disconnect the DEF Supply/Purge Line Heater harness connector.
4. Measure the resistance of the (K476) DEF Line Heater Output circuit between terminal 87 of the Line Heater Relay connector and the DEF Supply/Purge Line Heater harness connector.

   Is the resistance below 5.0 Ohms?

   Yes

   - Go To 5.

   No

   - Repair the (K476) DEF Line Heater Relay Output circuit for an open or high resistance. If the circuit fuse is found to be open, check the (K476) DEF Line Heater Relay Output circuit for a short to ground.
   - Perform the POWERTRAIN VERIFICATION TEST. Refer to **POWERTRAIN VERIFICATION TEST - 6.7L** .

5. **CHECK THE (K480) DEF SUPPLY LINE HEATER RETURN CIRCUIT FOR AN OPEN/HIGH RESISTANCE**

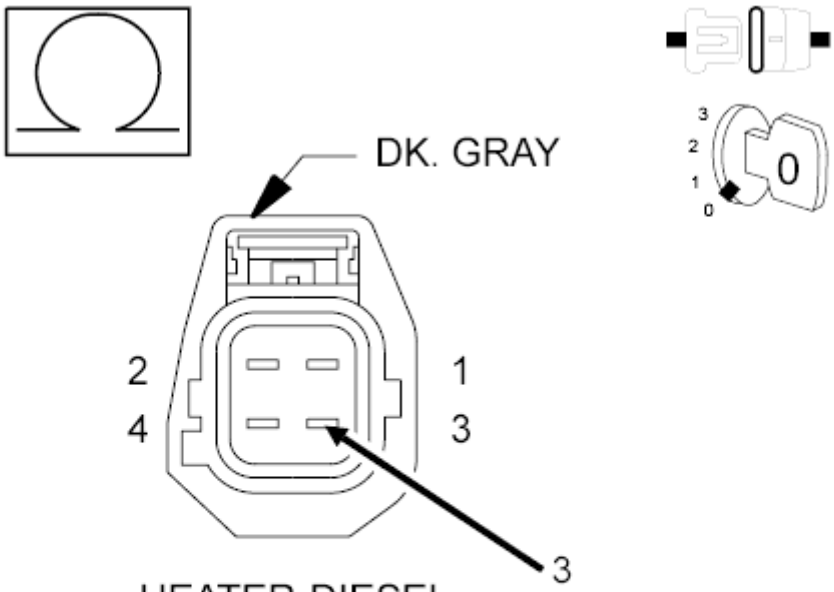

HEATER-DIESEL EXHAUST FLUID-SUPPLY/ PURGE LINE (6.7L)

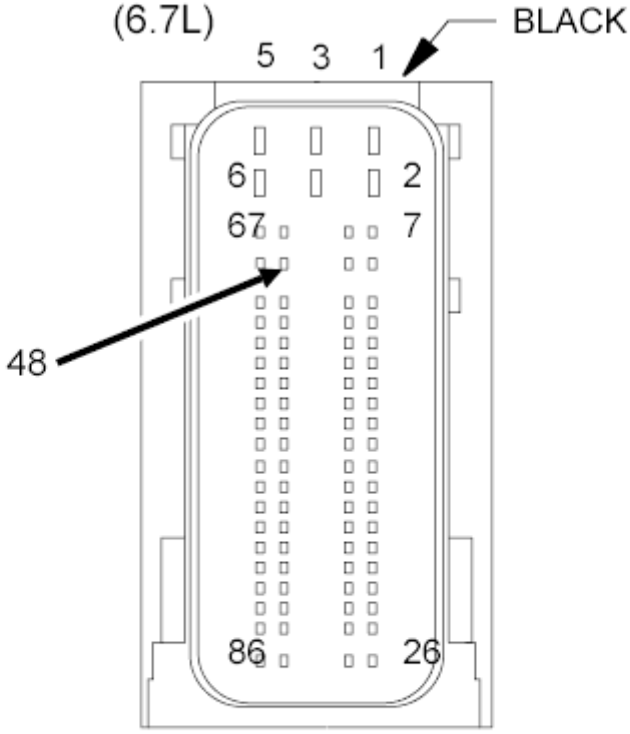

UNIT-DIESEL EXHAUST FLUID-DOSING

Fig. 129: Checking DEF Supply Line Heater Return Circuit For An Open Or High Resistance
Courtesy of CHRYSLER GROUP, LLC

1. Disconnect the DEF Dosing Control Unit C1 harness connector.
2. Measure the resistance of the (K480) DEF Supply Line Heater Return circuit between the DEF Supply/Purge Line Heater harness connector and the DEF Dosing Control Unit C1 harness connector.

   Is the resistance below 5.0 Ohms?

   Yes

   - Go To 6.

   No

   - Repair the (K480) DEF Supply Line Heater Return circuit for an open or high resistance.
   - Perform the POWERTRAIN VERIFICATION TEST. Refer to **POWERTRAIN VERIFICATION TEST - 6.7L** .

6. **CHECK THE (K479) DEF PURGE LINE HEATER RETURN CIRCUIT FOR AN OPEN/HIGH RESISTANCE**

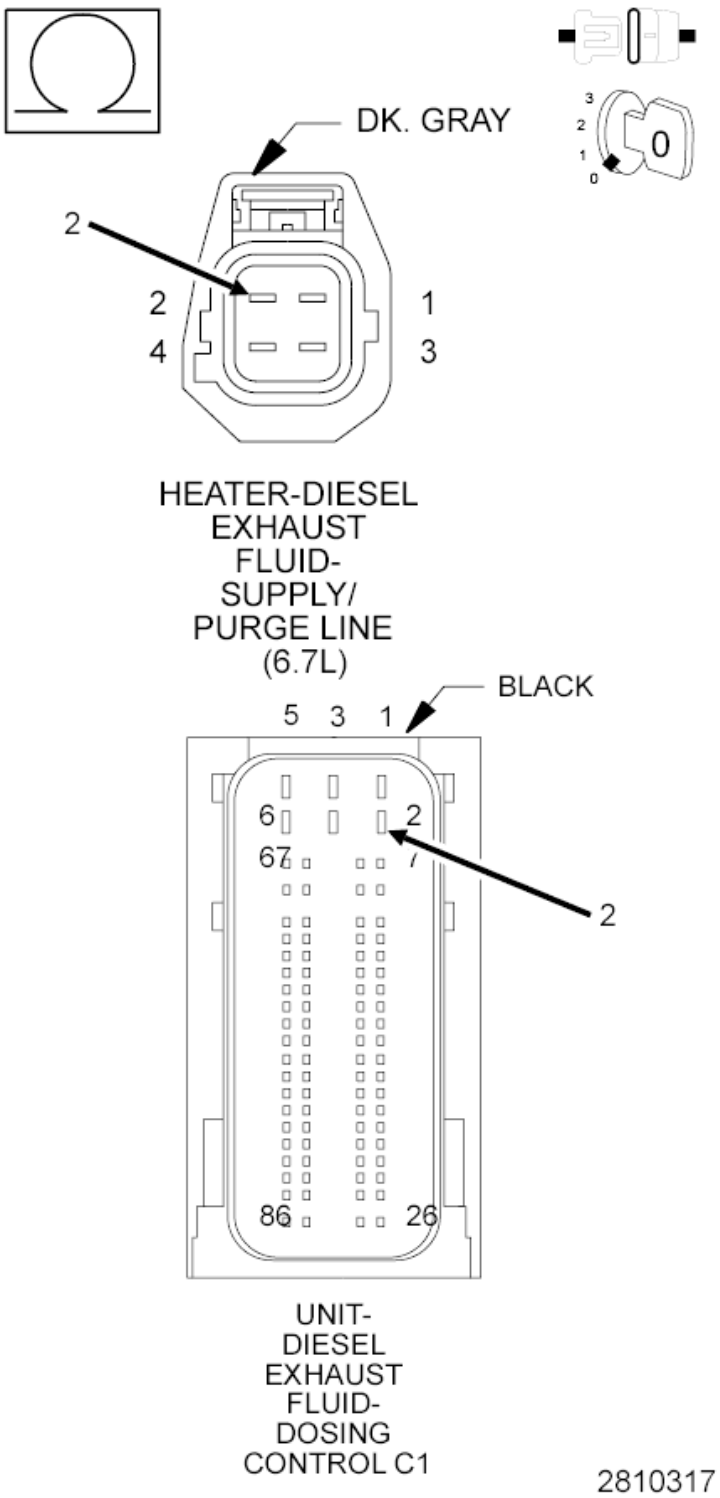

Fig. 130: Checking DEF Purge Line Heater Return Circuit For An Open/High Resistance
Courtesy of CHRYSLER GROUP, LLC

1. Measure the resistance of the (K479) DEF Pressure Line Heater Return circuit between the DEF Supply/Purge Line Heater harness connector and the DEF Dosing Control Unit C1 harness

connector.

Is the resistance below 5.0 Ohms?

Yes

- Go To 7.

No

- Repair the (K479) DEF Pressure Line Heater Return circuit for an open or high resistance.
- Perform the POWERTRAIN VERIFICATION TEST. Refer to **POWERTRAIN VERIFICATION TEST - 6.7L** .

7. **CHECK THE (K480) DEF SUPPLY LINE HEATER RETURN CIRCUIT FOR A SHORT TO GROUND**

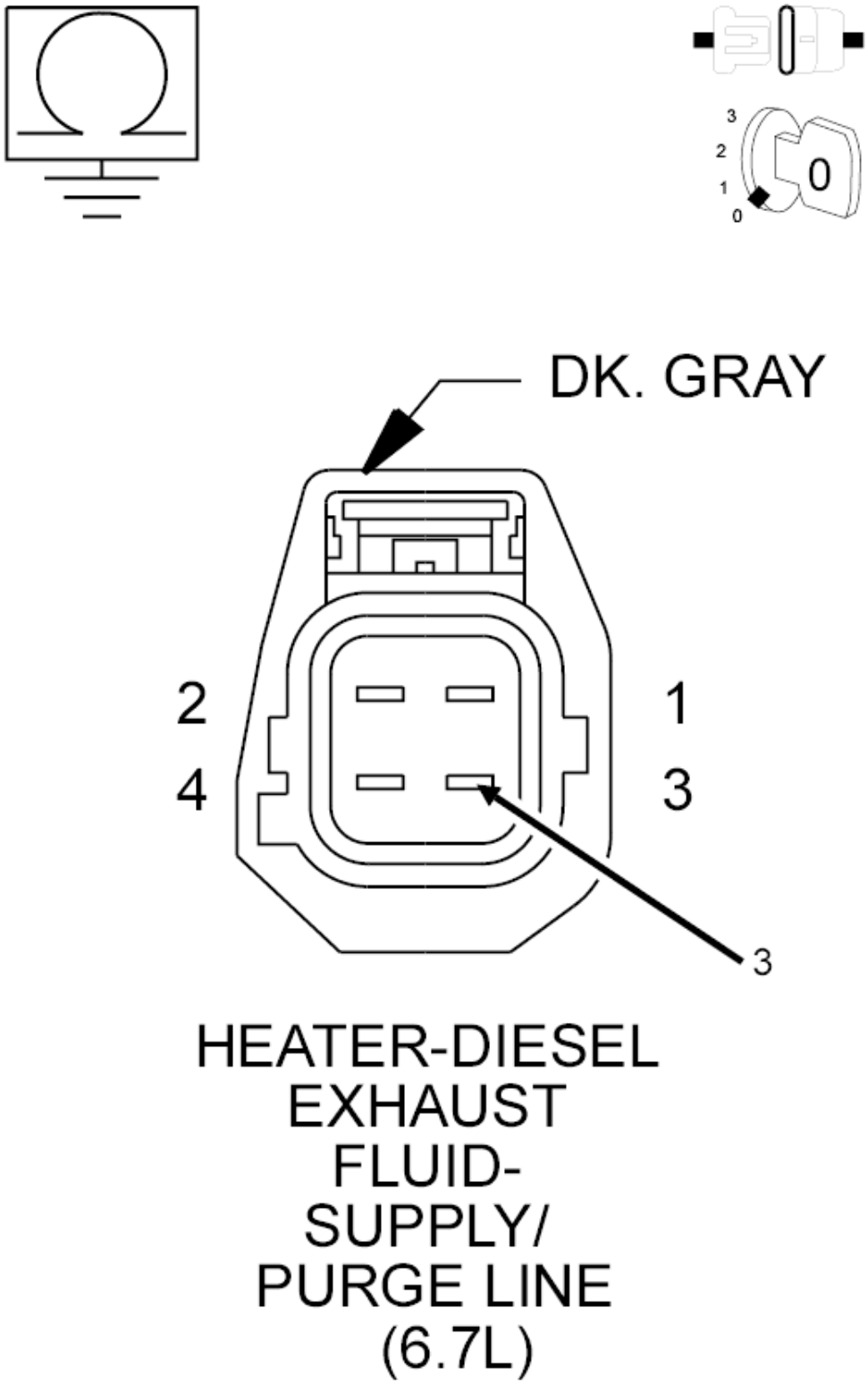

Fig. 131: Checking DEF Supply Line Heater Return Circuit For A Short To Ground
Courtesy of CHRYSLER GROUP, LLC

1. Measure the resistance between ground and the (K480) DEF Supply Line Heater Return circuit at the DEF Supply/Purge Line Heater harness connector.

   Is the resistance above 10k Ohms?

   Yes

   - Go To 8.

   No

   - Repair the (K480) DEF Supply Line Heater Return circuit for a short to ground.
   - Perform the POWERTRAIN VERIFICATION TEST. Refer to **POWERTRAIN VERIFICATION TEST - 6.7L** .

8. **CHECK THE (K479) DEF PURGE LINE HEATER RETURN CIRCUIT FOR A SHORT TO GROUND**

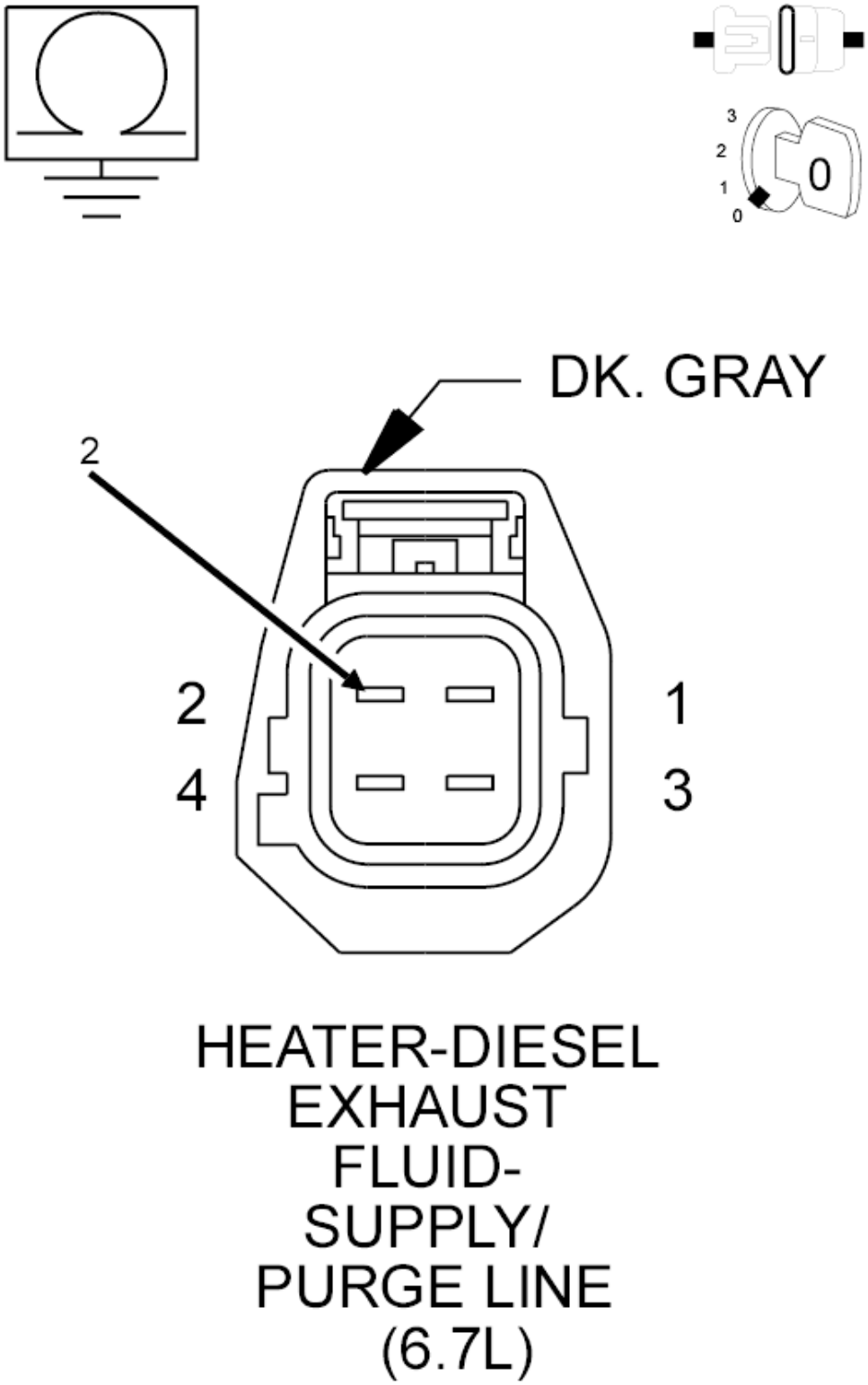

Fig. 132: Checking DEF Purge Line Heater Return Circuit For A Short To Ground
Courtesy of CHRYSLER GROUP, LLC

1. Measure the resistance between ground and the (K479) DEF Purge Line Heater Return circuit at the DEF Supply/Purge Line Heater harness connector.

   Is the resistance above 10k Ohms?

   Yes

   - Go To 9.

   No

   - Repair the (K479) DEF Purge Line Heater Return circuit for a short to ground.
   - Perform the POWERTRAIN VERIFICATION TEST. Refer to **POWERTRAIN VERIFICATION TEST - 6.7L** .

9. **CHECK THE RESISTANCE OF THE DEF SUPPLY LINE HEATER**
   1. Measure the resistance across the terminals of the DEF Supply Line Heater.

      Does the resistance measure between 7.2 Ohms and 8.7 Ohms?

      Yes

      - Go To 10.

      No

      - Replace the DEF Supply/Purge Line Assembly in accordance with the service information. Refer to **LINE, DIESEL EXHAUST FLUID SUPPLY, REMOVAL** .
      - Perform the POWERTRAIN VERIFICATION TEST. Refer to **POWERTRAIN VERIFICATION TEST - 6.7L** .

10. **CHECK THE RESISTANCE OF THE DEF PURGE LINE HEATER**
    1. Measure the resistance across the terminals of the DEF Purge Line Heater.

       Does the resistance measure between 7.4 Ohms and 8.9 Ohms?

       Yes

       - Replace the DEF Dosing Control Unit in accordance with the service information. Refer to **UNIT, DIESEL EXHAUST FLUID DOSING CONTROL, REMOVAL** .
       - Perform the POWERTRAIN VERIFICATION TEST. Refer to **POWERTRAIN VERIFICATION TEST - 6.7L** .

       No

       - Replace the DEF Supply/Purge Line Assembly in accordance with the service information. Refer to **LINE, DIESEL EXHAUST FLUID RETURN, REMOVAL** .

- Perform the POWERTRAIN VERIFICATION TEST. Refer to **POWERTRAIN VERIFICATION TEST - 6.7L** .

P20C3-(DIESEL EXHAUST FLUID) REDUCTANT RETURN LINE HEATER CONTROL CIRCUIT LOW

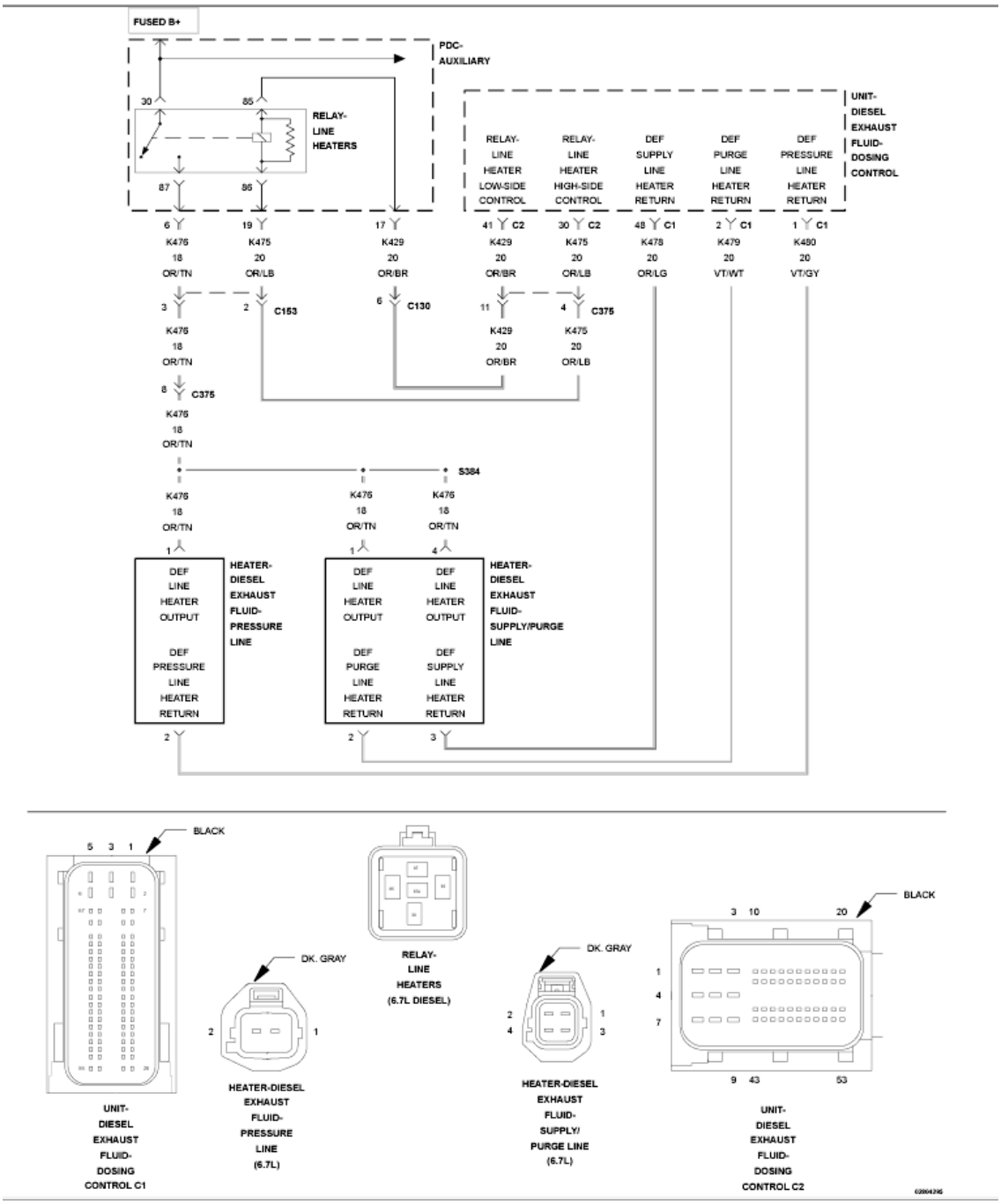

Fig. 133: Diesel Exhaust Fluid Reductant Line Heater Relay Control Circuit Wiring Diagram
Courtesy of CHRYSLER GROUP, LLC

For a complete wiring diagram, **refer to appropriate SYSTEM WIRING DIAGRAMS article** .

THEORY OF OPERATION

This DTC is referring to the DEF Purge Line Heater. Each of the Diesel Exhaust Fluid (DEF) system hoses has a built in heater to warm the fluid in the lines. The three line heaters share a common power supply via the DEF Line Heater Relay which is controlled by the DEF Dosing Control Unit. The DEF Dosing Control Unit controls the heaters individually through the line heater return circuits. The three line heater circuits are monitored at the return circuit. The DEF Dosing Control Unit will illuminate the MIL light via the PCM immediately after the diagnostics runs and fails. The DEF Dosing Control Unit will turn off the MIL light via the PCM when the monitor runs and passes in three consecutive key cycles.

WHEN MONITORED:

Continuously with the ignition on.

SET CONDITION:

The DEF Dosing Control Unit detects that the DEF Purge Line Heater circuit is shorted to ground.

POSSIBLE CAUSES

Possible Causes
(K479) DEF PURGE LINE HEATER RETURN CIRCUIT SHORTED TO GROUND
DEF SUPPLY/PURGE LINE HEATER
DEF DOSING CONTROL UNIT

Always perform the Pre-Diagnostic Troubleshooting procedure before proceeding. Refer to PRE-DIAGNOSTIC TROUBLESHOOTING PROCEDURE - 6.7L .

NOTE: **The DEF Line Heater monitor runs only when the DEF Line Heater Relay is commanded on. If the ambient temperature is too warm for the DEF Line Heaters to be turned on, the DTC will remain active and will not be able to be erased after repair is completed. Using the scan tool, navigate to Actuator Tests and actuate the Line Heater Relay test for the appropriate Line Heater to run the diagnostic and determine if the repair has been completed. If the repair is complete, the fault will move to stored and be able to be cleared with the scan tool.**

DIAGNOSTIC TEST

1. **DTC ACTIVE**
    1. Turn the ignition on.
    2. With the scan tool, View all active DTCs.

    Is the DTC active?

Yes

- Go To 2.

No

- Perform the INTERMITTENT CONDITION diagnostic procedure. Refer to **INTERMITTENT CONDITION - 6.7L** .

2. **CHECK THE (K479) DEF PURGE LINE HEATER RETURN CIRCUIT FOR A SHORT TO GROUND**

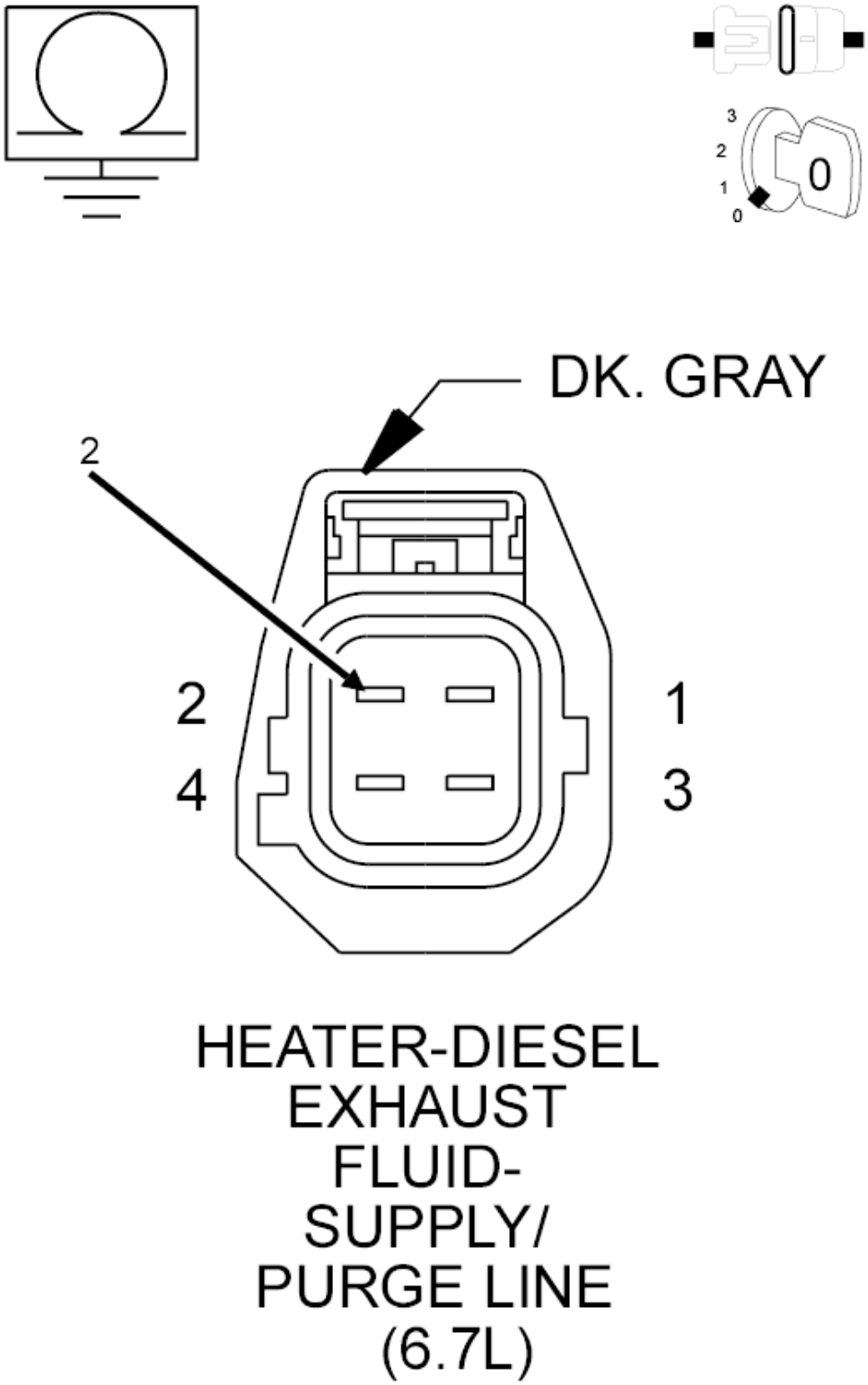

Fig. 134: Checking DEF Purge Line Heater Return Circuit For A Short To Ground
Courtesy of CHRYSLER GROUP, LLC

1. Turn the ignition off.
2. Disconnect the DEF Supply/Purge Line Heater harness connector.
3. Disconnect the DEF Dosing Control Unit C1 harness connector.
4. Measure the resistance between ground and the (K479) DEF Purge Line Heater Return circuit at the DEF Supply/Purge Line Heater harness connector.

   Is the resistance above 10k Ohms?

   Yes

   - Go To 3.

   No

   - Repair the (K479) DEF Purge Line Heater Return circuit for a short to ground.
   - Perform the POWERTRAIN VERIFICATION TEST. Refer to **POWERTRAIN VERIFICATION TEST - 6.7L** .

3. **CHECK THE RESISTANCE OF THE DEF PURGE LINE HEATER**
   1. Measure the resistance of the DEF Purge Line Heater.

      Does the resistance measure between 7.4 Ohms and 8.9 Ohms?

      Yes

      - Replace the DEF Dosing Control Unit in accordance with the service information. Refer to **UNIT, DIESEL EXHAUST FLUID DOSING CONTROL, REMOVAL** .
      - Perform the POWERTRAIN VERIFICATION TEST. Refer to **POWERTRAIN VERIFICATION TEST - 6.7L** .

      No

      - Replace the DEF Supply/Purge Line Assembly in accordance with the service information. Refer to **LINE, DIESEL EXHAUST FLUID RETURN, REMOVAL** .
      - Perform the POWERTRAIN VERIFICATION TEST. Refer to **POWERTRAIN VERIFICATION TEST - 6.7L** .

P20C4-(DIESEL EXHAUST FLUID) REDUCTANT RETURN LINE HEATER CONTROL CIRCUIT HIGH

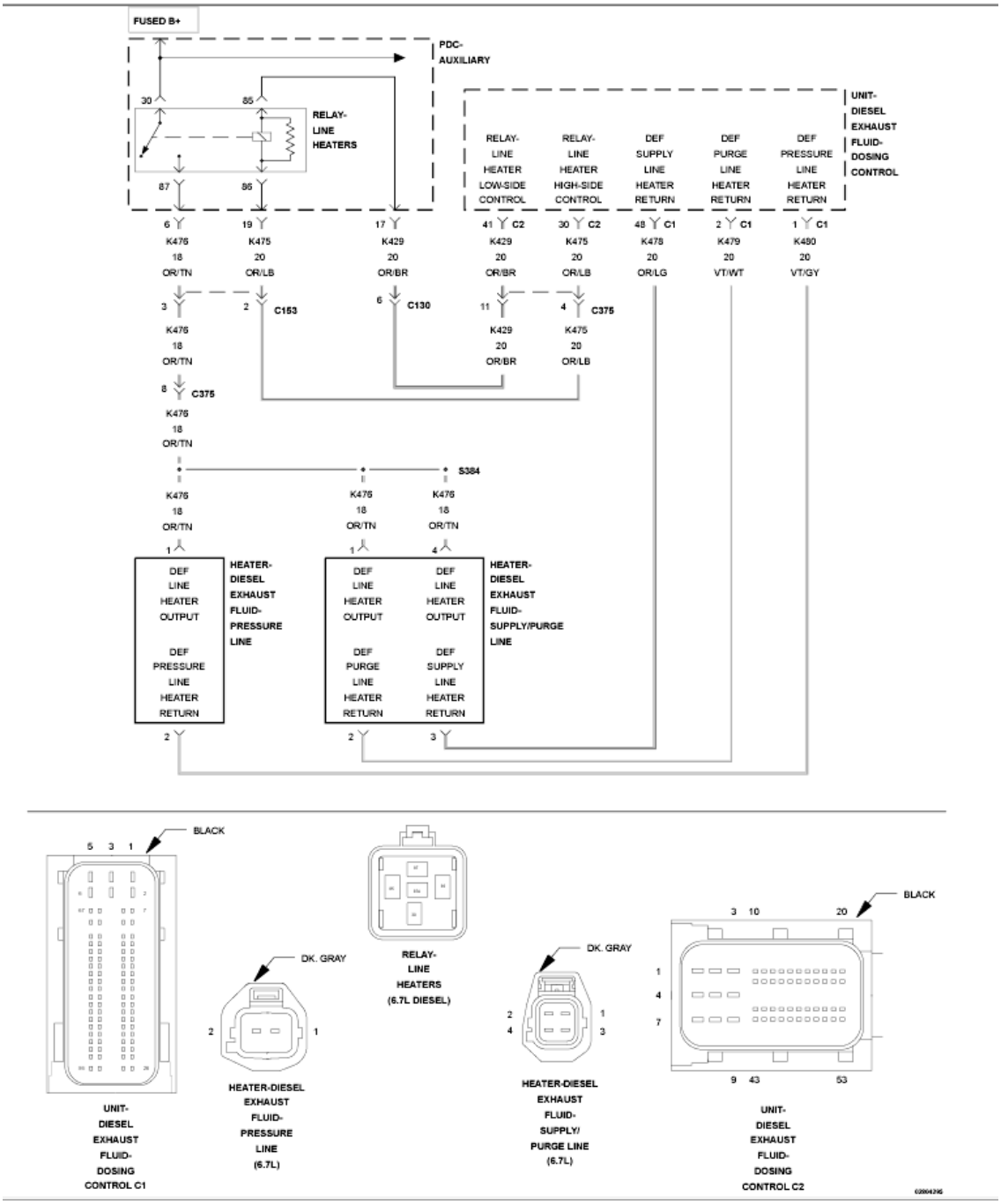

Fig. 135: Diesel Exhaust Fluid Reductant Line Heater Relay Control Circuit Wiring Diagram
Courtesy of CHRYSLER GROUP, LLC

For a complete wiring diagram, **refer to appropriate SYSTEM WIRING DIAGRAMS article** .

THEORY OF OPERATION

This DTC is referring to the DEF Supply/Purge Line Heater. Each of the Diesel Exhaust Fluid (DEF) system hoses has a built in heater to warm the fluid in the lines. The three line heaters share a common power supply via the DEF Line Heater Relay which is controlled by the DEF Dosing Control Unit. The DEF Dosing Control

Unit controls the heaters individually through the line heater return circuits. The three line heater circuits are monitored at the return circuit. The DEF Dosing Control Unit will illuminate the MIL light via the PCM immediately after the diagnostics runs and fails and the line heater will be disabled. The DEF Dosing Control Unit will turn off the MIL light via the PCM when the monitor runs and passes in three consecutive key cycles.

WHEN MONITORED:

Continuously with the ignition on, and the heater commanded on.

SET CONDITION:

The DEF Dosing Control Unit detects that the DEF Purge Line Heater circuit voltage is above a calibrated value.

POSSIBLE CAUSES

Possible Causes
(K480) DEF SUPPLY LINE HEATER RETURN CIRCUIT SHORTED TO VOLTAGE
(K479) DEF RETURN LINE HEATER RETURN CIRCUIT SHORTED TO VOLTAGE
DEF SUPPLY/PURGE LINE HEATER
DEF DOSING CONTROL UNIT

Always perform the Pre-Diagnostic Troubleshooting procedure before proceeding. Refer to PRE-DIAGNOSTIC TROUBLESHOOTING PROCEDURE - 6.7L .

NOTE: **The DEF Line Heater monitor runs only when the DEF Line Heater Relay is commanded on. If the ambient temperature is too warm for the DEF Line Heaters to be turned on, the DTC will remain active and will not be able to be erased after repair is completed. Using the scan tool, navigate to Actuator Tests and actuate the Line Heater Relay test for the appropriate Line Heater to run the diagnostic and determine if the repair has been completed. If the repair is complete, the fault will move to stored and be able to be cleared with the scan tool.**

DIAGNOSTIC TEST

1. **ACTIVE DTC**
    1. Turn the ignition on, engine not running.
    2. With the scan tool, navigate to Systems Tests and actuate the DEF Supply and Purge Line Heaters.
    3. With the scan tool, View DTCs.

    Is the DTC active?

    Yes

    - Go To 2.

No

- Perform the INTERMITTENT CONDITION diagnostic procedure. Refer to **INTERMITTENT CONDITION - 6.7L** .

2. **CHECK THE RESISTANCE OF THE DEF SUPPLY LINE HEATER**
   1. Turn the ignition off.
   2. Disconnect the DEF Supply/Purge Line Heater harness connector.
   3. Measure the resistance across the terminals of the DEF Supply Line Heater.

   Does the resistance between 7.2 Ohms and 8.6 Ohms?

   Yes

   - Go To 3.

   No

   - Replace the DEF Supply/Purge Line Assembly in accordance with the service information. Refer to **LINE, DIESEL EXHAUST FLUID SUPPLY, REMOVAL** .
   - Perform the POWERTRAIN VERIFICATION TEST. Refer to **POWERTRAIN VERIFICATION TEST - 6.7L** .

3. **CHECK THE RESISTANCE OF THE DEF PURGE LINE HEATER**
   1. Measure the resistance across the terminals of the DEF Purge Line Heater.

   Does the resistance measure between 7.4 Ohms and 8.9 Ohms?

   Yes

   - Go To 4.

   No

   - Replace the DEF Supply/Purge Line Assembly in accordance with the service information. Refer to **LINE, DIESEL EXHAUST FLUID RETURN, REMOVAL** .
   - Perform the POWERTRAIN VERIFICATION TEST. Refer to **POWERTRAIN VERIFICATION TEST - 6.7L** .

4. **CHECK THE (K480) DEF SUPPLY LINE HEATER RETURN CIRCUIT FOR A SHORT TO ANOTHER CIRCUIT**

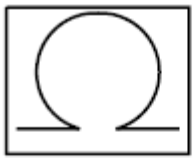

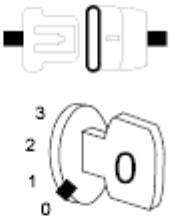

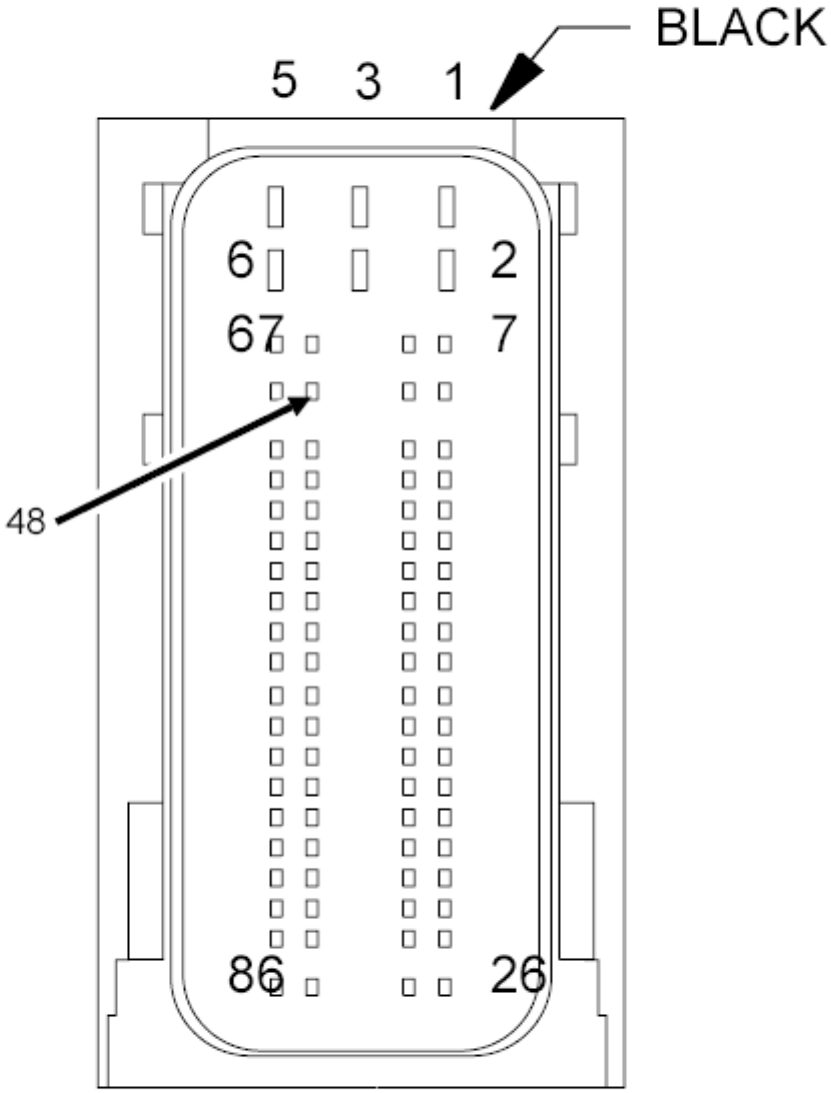

UNIT-
DIESEL
EXHAUST
FLUID-
DOSING
CONTROL C1

Fig. 136: Checking DEF Supply Line Heater Return Circuit For A Short To Another Circuit
Courtesy of CHRYSLER GROUP, LLC

1. Disconnect the DEF Dosing Control Unit C1 harness connector.
2. Measure the resistance between the (K480) DEF Supply Line Heater Return circuit and all other circuits at the DEF Dosing Control Unit C1 harness connector

   Is the resistance above 10k Ohms between the (K480) DEF Supply Line Heater Return circuit and all other circuits?

   Yes

   - Go To 5.

   No

   - Repair the short between the (K480) DEF Supply Line Heater Return circuit and the circuit that measured below 10k Ohms.
   - Perform the POWERTRAIN VERIFICATION TEST. Refer to **POWERTRAIN VERIFICATION TEST - 6.7L** .

5. **CHECK THE (K479) DEF PURGE LINE HEATER RETURN CIRCUIT FOR A SHORT TO ANOTHER CIRCUIT**

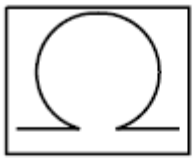

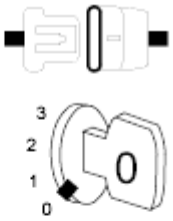

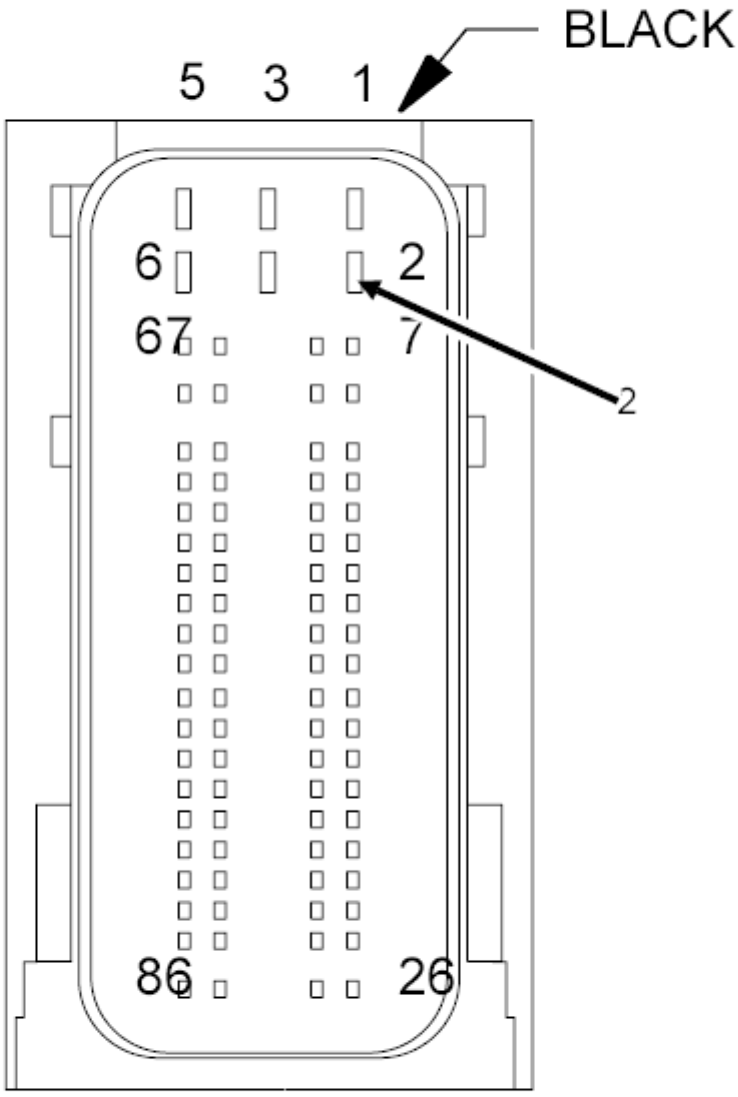

UNIT-
DIESEL
EXHAUST
FLUID-
DOSING
CONTROL C1

Fig. 137: Checking DEF Purge Line Heater Return Circuit For A Short To Another Circuit
Courtesy of CHRYSLER GROUP, LLC

1. Measure the resistance between the (K479) DEF Purge Line Heater Return circuit and all other circuits at the DEF Dosing Control Unit C1 harness connector

   Is the resistance above 10k Ohms between the (K479) DEF Purge Line Heater Return circuit and all other circuits?

   Yes

   - Replace the DEF Dosing Control Unit in accordance with the service information. Refer to **UNIT, DIESEL EXHAUST FLUID DOSING CONTROL, REMOVAL** .
   - Perform the POWERTRAIN VERIFICATION TEST. Refer to **POWERTRAIN VERIFICATION TEST - 6.7L** .

   No

   - Repair the short between the (K479) DEF Purge Line Heater Return circuit and the circuit that measured below 10k Ohms.
   - Perform the POWERTRAIN VERIFICATION TEST. Refer to **POWERTRAIN VERIFICATION TEST - 6.7L** .

P20C6-(DIESEL EXHAUST FLUID) REDUCTANT HEATER D CONTROL PERFORMANCE

For a complete wiring diagram, **refer to appropriate SYSTEM WIRING DIAGRAMS article** .

THEORY OF OPERATION

The DEF Line Heater Relay provides the power supply to DEF Line Heaters 1, 2, and 3. It is controlled by the DEF Dosing Control Unit.

WHEN MONITORED:

The monitor runs at ignition off.

SET CONDITION:

Battery voltage has been detected at the Diesel Exhaust Fluid Line Heaters when the DEF Line Heater Relay is commanded off. The Powertrain Control Module (PCM) illuminates the MIL lamp immediately after the monitor runs and fails. Diesel exhaust fluid line heating will be disabled. The PCM will turn off the MIL lamp after the monitor runs and passes.

POSSIBLE CAUSES

Possible Causes
(K476) LINE HEATER RELAY OUTPUT CIRCUIT SHORTED TO VOLTAGE

DEF LINE HEATER RELAY STUCK CLOSED

Always perform the Pre-Diagnostic Troubleshooting procedure before proceeding. Refer to PRE-DIAGNOSTIC TROUBLESHOOTING PROCEDURE - 6.7L .

DIAGNOSTIC TEST

1. **ACTIVE DTC**
    1. Ignition on, engine not running.
    2. With the scan tool, read DTCs.

    Is the DTC active?

    Yes

    - Go To 2.

    No

    - Perform the INTERMITTENT CONDITION diagnostic procedure. Refer to **INTERMITTENT CONDITION - 6.7L** .
2. **CHECK THE DEF LINE HEATER RELAY**
    1. Turn the ignition off.
    2. Remove the DEF Line Heater Relay.
    3. Measure the resistance between terminal 30 and terminal 87 of the DEF Line Heater Relay.

    Is the resistance below 10k Ohms?

    Yes

    - Replace the DEF Line Heater Relay in accordance with the service information.
    - Perform the POWERTRAIN VERIFICATION TEST. Refer to **POWERTRAIN VERIFICATION TEST - 6.7L** .

    No

    - Repair the (K476) DEF Line Heater Relay Output circuit for a short to voltage.
    - Perform the POWERTRAIN VERIFICATION TEST. Refer to **POWERTRAIN VERIFICATION TEST - 6.7L** .

P20E8-(DIESEL EXHAUST FLUID) REDUCTANT PRESSURE TOO LOW

For a complete wiring diagram, **refer to appropriate SYSTEM WIRING DIAGRAMS article** .

THEORY OF OPERATION

When the DEF Dosing Control Unit is in pressure control mode, the DEF Dosing Control Unit also provides a Pulse Width Modulated (PWM) signal to turn on the DEF Supply Pump Assembly to refill the lines. As the lines fill, the pressure builds to the set point. When the pressure reaches the set point, the DEF Dosing Control Unit turns on the DEF Injector to bleed air out of the Pressure Line. Each time the injector is turned off, the DEF Dosing Control Unit the amount of time it takes for the pressure to rise back to the set point to determine when all of the air is bled out of the line. The DEF Dosing Control Unit will illuminate the MIL light via the Powertrain Control Module (PCM) immediately after the diagnostics runs and fails and diesel exhaust fluid injection into the aftertreatment system is disabled. The DEF Dosing Control Unit will turn off the MIL light via the PCM immediately after the monitor runs and passes.

WHEN MONITORED:

When the Diesel Exhaust Fluid system is attempting to prime.

SET CONDITION:

When the Diesel Exhaust Fluid system has been unable to successfully prime after ten attempts.

POSSIBLE CAUSES

Possible Causes
LOW DIESEL EXHAUST FLUID LEVEL
CONTAMINATED DIESEL EXHAUST FLUID
DEF SUPPLY LINE DAMAGED/LEAKING
DEF PRESSURE LINE DAMAGED/LEAKING
DEF SUPPLY PUMP ASSEMBLY

Always perform the Pre-Diagnostic Troubleshooting procedure before proceeding. Refer to PRE-DIAGNOSTIC TROUBLESHOOTING PROCEDURE - 6.7L .

DIAGNOSTIC TEST

1. **CHECK THE DEF TANK LEVEL AND FLUID**
    1. Verify the DEF Tank level.
    2. Check the fluid for signs of contamination.

    Is the fluid level in the DEF Tank above the minimum requirement and free of contamination?

    Yes

    - Go To 2.

    No

    - Fill the DEF Tank to the proper level with clean Diesel Exhaust Fluid. If the fluid is contaminated, perform the cleaning procedure. Refer to **TANK, DIESEL EXHAUST**

FLUID, CLEANING .

- Perform the POWERTRAIN VERIFICATION TEST. Refer to **POWERTRAIN VERIFICATION TEST - 6.7L** .

2. **ACTIVE DTC**
   1. Turn the ignition on.
   2. With the scan tool, navigate to Systems Tests and actuate the Diesel Exhaust Fluid Doser Pump Override Test.
   3. With the scan tool, View DTCs.

      Is the DTC active?

      Yes

      - Go To 3.

      No

      - Perform the INTERMITTENT CONDITION diagnostic procedure. Refer to **INTERMITTENT CONDITION - 6.7L** .

3. **CHECK THE DEF SUPPLY SYSTEM FOR LEAKS**
   1. During the actuation of the Diesel Exhaust Fluid Doser Pump Override Test, visually inspect the DEF Supply Pump Assembly and DEF Lines for signs of a fluid leak.

      Are there any leaks in the DEF System?

      Yes

      - Perform the appropriate repair.
      - Perform the POWERTRAIN VERIFICATION TEST. Refer to **POWERTRAIN VERIFICATION TEST - 6.7L** .

      No

      - Go To 4.

4. **CHECK THE DEF SUPPLY LINE**
   1. Stop actuation of the Diesel Exhaust Fluid Doser Pump Override Test.
   2. Turn the ignition off.
   3. Remove the DEF Supply Line.
   4. Check the DEF Supply Line for a restriction and check for crystallization on the DEF Supply Pump Assembly inlet fitting.

      Is the DEF Supply Line and DEF Supply Pump Assembly fitting free of obstructions?

      Yes

- Replace the DEF Supply Pump Assembly in accordance with the service information. Refer to **ASSEMBLY, DIESEL EXHAUST FLUID PUMP, REMOVAL** .
- Perform the POWERTRAIN VERIFICATION TEST. Refer to **POWERTRAIN VERIFICATION TEST - 6.7L** .

No

- Clear the restriction from the DEF Supply Line or DEF Supply Pump Assembly inlet fitting.
- Perform the POWERTRAIN VERIFICATION TEST. Refer to **POWERTRAIN VERIFICATION TEST - 6.7L** .

P20E9-(DIESEL EXHAUST FLUID) REDUCTANT PRESSURE TOO HIGH

For a complete wiring diagram, **refer to appropriate SYSTEM WIRING DIAGRAMS article** .

THEORY OF OPERATION

The DEF Pressure Sensor provides a signal to the DEF Dosing Control Unit on the sensor signal circuit. This sensor signal voltage changes based on the diesel exhaust fluid pressure supplied by the DEF Pump Assembly. The DEF Dosing Control Unit will detect a low signal voltage at low diesel exhaust fluid pressures, and high signal voltage at high diesel exhaust fluid pressures. The DEF Dosing Control Unit will illuminate the MIL light via the Powertrain Control Module (PCM) immediately after the diagnostics runs and fails and diesel exhaust fluid injection into the aftertreatment system is disabled. The DEF Dosing Control Unit will turn off the MIL light via the PCM immediately after the monitor runs and passes.

WHEN MONITORED:

Continuously with the ignition on.

SET CONDITION:

DEF Dosing Control Unit detects that the pressure in the system is above a calibrated value for 20 seconds.

POSSIBLE CAUSES

Possible Causes
DEF PRESSURE SENSOR FAILED IN RANGE
DEF LINES OR FITTINGS LEAKING OR RESTRICTED
DEF SUPPLY PUMP ASSEMBLY FILTER
DEF SUPPLY PUMP ASSEMBLY

Always perform the Pre-Diagnostic Troubleshooting procedure before proceeding. Refer to PRE-DIAGNOSTIC TROUBLESHOOTING PROCEDURE - 6.7L .

DIAGNOSTIC TEST

1. **ACTIVE DTC**
    1. Turn the ignition on.
    2. With the scan tool, navigate to Systems Tests and actuate the Diesel Exhaust Fluid Doser Pump Override Test.
    3. With the scan tool, View DTCs.

    Is the DTC active?

    Yes

    - Go To 2.

    NOTE: **If any of the following DTCs are active with this DTC; P20A0, P20A2, P20A3, P20FE, P2048, P2049 or P208B, perform the diagnostics for those DTCs before continuing with this test procedure.**

    No

    - Perform the INTERMITTENT CONDITION diagnostic procedure. Refer to **INTERMITTENT CONDITION - 6.7L** .
2. **CHECK THE DEF LINES AND FITTINGS FOR LEAKS OR RESTRICTIONS**
    1. Turn the ignition off.
    2. Visually inspect the DEF lines and fittings for signs of a leak.
    3. Remove the lines from the fittings at the DEF Supply Pump Assembly and DEF Injector and inspect the fittings for signs of crystallization or blockages.

    Were any leaks or blockages found?

    Yes

    - Repair or replace the leaking or blocked lines or fittings as necessary.
    - Perform the POWERTRAIN VERIFICATION TEST. Refer to **POWERTRAIN VERIFICATION TEST - 6.7L** .

    No

    - Replace the DEF Pump Assembly Filter.
    - Go To 3.
3. **CHECK THE DEF PUMP ASSEMBLY**
    1. Reconnect all of the DEF lines.
    2. Remove the DEF Injector from the Decomp Tube. Refer to **INJECTOR, DIESEL EXHAUST FLUID, REMOVAL** .

3. Place the DEF Injector in a container to capture the fluid sprayed.
4. Turn the ignition on.
5. With the scan tool, navigate to Systems Tests and actuate the Diesel Exhaust Fluid Doser Pump Override Test.

NOTE: **This Test will run for six minutes before timing out. The amount of flow may fluctuate through out the test, therefore the test must be allowed to run completely in order for the results to be accurate. The fluid should spray out as a mist. There should be no dripping from the holes in the DEF Injector at any time during the duration of the test procedure.**

6. Measure the amount of fluid sprayed after the test times out.

   Does the fluid sprayed measure between 85 ml and 115 ml?

   Yes

   - Repair complete.

   No

   - Replace the DEF Pump Assembly in accordance with the service information. Refer to **ASSEMBLY, DIESEL EXHAUST FLUID PUMP, REMOVAL** .
   - Perform the POWERTRAIN VERIFICATION TEST. Refer to **POWERTRAIN VERIFICATION TEST - 6.7L** .

P20EC-SCR NOX CATALYST - OVER TEMPERATURE BANK 1

For a complete wiring diagram, **refer to appropriate SYSTEM WIRING DIAGRAMS article** .

THEORY OF OPERATION

The Selective Catalytic Reduction (SCR) Catalyst is used in combination with the Diesel Exhaust Fluid system to reduce the amount of NOx gases produced during engine combustion. Excessive fuel or oil entering the exhaust system due to a failed engine component or Fuel Injector can cause the temperature to rise and will result in damage to the SCR Catalyst.

WHEN MONITORED:

Continuously with the ignition on.

SET CONDITION:

The Powertrain Control Module detects that the SCR Catalyst outlet temperature is above the maximum allowable temperature.

POSSIBLE CAUSES

Possible Causes
DEGRADED, DILUTED OR INCORRECT DIESEL EXHAUST FLUID
EXHAUST GAS TEMPERATURE SENSOR 1/4 FAILED IN RANGE
EXCESSIVE FUEL OR OIL INTRODUCED INTO THE EXHAUST SYSTEM
ENGINE MISFIRE
DEFECTIVE DOC/DPF CATALYST

Always perform the Pre-Diagnostic Troubleshooting procedure before proceeding. Refer to PRE-DIAGNOSTIC TROUBLESHOOTING PROCEDURE - 6.7L .

DIAGNOSTIC TEST

1. **CHECK THE OPERATION OF EXHAUST TEMPERATURE SENSORS**

   NOTE: Repair any fuel, emissions, or DEF system component DTCs before continuing with this diagnostic procedure.

   1. Start and idle the engine for 10 minutes.
   2. With the scan tool, read and compare the Exhaust Gas Temperature (EGT) Sensors.

      Do any of the EGT Sensors vary more than 43°F of the others?

      Yes

      - Go To 3.

      No

      - Go To 2.

2. **CHECK THE EXHAUST TEMPERATURE SENSOR FOR A SHORT TO ANOTHER CIRCUIT**

   NOTE: Perform this test on the EGT Sensor that was reading more than 43°F above or below the others.

   1. Turn the ignition off.
   2. Disconnect the Powertrain Control Module (PCM) C2 harness connector.
   3. Measure the resistance between the EGT Sensor Signal circuit and all other circuits in the PCM C2 harness connector.

      Was the resistance above 10k Ohms between the EGT Sensor Signal circuit and all other circuits in the PCM C2 harness connector?

      Yes

- Replace the Exhaust Gas Temperature Sensor in accordance with the service information.
- Perform the POWERTRAIN VERIFICATION TEST. Refer to **POWERTRAIN VERIFICATION TEST - 6.7L** .

No

- Repair the short between the Exhaust Gas Temperature Sensor circuit and the circuit that measured below 10k Ohms.
- Perform the POWERTRAIN VERIFICATION TEST. Refer to **POWERTRAIN VERIFICATION TEST - 6.7L** .

3. **CHECK THE DIESEL EXHAUST FLUID**
   1. Turn the ignition off.
   2. Collect a sample of diesel exhaust fluid from the system.
   3. Visually inspect the fluid for signs of contamination or debris.
   4. Test the quality of the fluid using litmus paper (supplied by parts) or by using the SPX DEF/UREA Refractometer 94-F-00K-108-456 or equivalent.

   NOTE: The diesel exhaust fluid should register approximately 9 ph with the litmus paper and 32.5 percent using a refractometer.

   Is the diesel exhaust fluid quality within specification and free of debris and contamination?

   Yes

   - Go To 4.

   No

   - Drain the diesel exhaust fluid from the tank and fill the system. If the fluid is contaminated, follow the cleaning procedure. Refer to **TANK, DIESEL EXHAUST FLUID, CLEANING** .
   - Perform the POWERTRAIN VERIFICATION TEST. Refer to **POWERTRAIN VERIFICATION TEST - 6.7L** .

4. **CHECK FOR CYLINDER MISFIRE**
   1. Start the engine.
   2. With the scan tool, navigate to Systems Tests, and perform the Injector Kill System Test.

   Were any cylinders found to be faulty or low?

   Yes

   - Perform the CHECKING ENGINE MISFIRE / RUNS ROUGH / PERFORMANCE TEST diagnostic procedure. Refer to **DIAGNOSIS AND TESTING, 6.7L** .
   - Perform the POWERTRAIN VERIFICATION TEST. Refer to **POWERTRAIN**

VERIFICATION TEST - 6.7L .

No

- Go To 5.

5. **CHECK FOR EXCESSIVE ENGINE OIL BEING INTRODUCED INTO THE AFTERTREATMENT SYSTEM**
   1. Turn the ignition off.
   2. Remove the turbocharger outlet and inspect for signs of oil, fuel or moisture being introduced into the aftertreatment system from the engine.

      Was engine oil, fuel or moisture found in the turbocharger exhaust outlet?

      Yes

      - Locate the cause of possible diesel fuel or engine oil being carried from the engine into the exhaust system. Inspect the SCR Catalyst for possible damage.
      - Perform the POWERTRAIN VERIFICATION TEST. Refer to **POWERTRAIN VERIFICATION TEST - 6.7L** .

      No

      - Go To 6.

6. **CHECK THE DOC/DPF CATALYST FOR PLUGGING**
   1. Remove the DOC/DPF Catalyst and check the inlet side for signs of soot accumulation or face plugging.

      Does the DOC/DPF Catalyst show any evidence of face plugging or soot accumulation?

      Yes

      - If DTC P1451 is present, perform a scan tool initiated regeneration of the aftertreatment system. If DTC P1451 is not present, replace the DOC/DPF assembly in accordance with the service information.
      - Perform the POWERTRAIN VERIFICATION TEST. Refer to **POWERTRAIN VERIFICATION TEST - 6.7L** .

      No

      - Go To 7.

7. **CHECK THE DOC/DPF CATALYST FOR INTERNAL CRACKING**
   1. Inspect the outlet side of the DOC/DPF Catalyst for soot accumulation.

      Is there any soot accumulation in the outlet of the DOC/DPF Catalyst?

Yes

- Replace the DOC/DPF Catalyst in accordance with the service information. Refer to **FILTER, DIESEL PARTICULATE, REMOVAL** .
- Perform the POWERTRAIN VERIFICATION TEST. Refer to **POWERTRAIN VERIFICATION TEST - 6.7L** .

No

- Replace the DOC/DPF Catalyst outlet temperature sensor. Refer to **CATALYST, SELECTIVE CATALYTIC REDUCTION (SCR), REMOVAL** .
- Perform the POWERTRAIN VERIFICATION TEST. Refer to **POWERTRAIN VERIFICATION TEST - 6.7L** .

P20EE-SCR NOX CATALYST EFFICIENCY BELOW THRESHOLD - BANK 1

For a complete wiring diagram, **refer to appropriate SYSTEM WIRING DIAGRAMS article** .

THEORY OF OPERATION

The Selective Catalytic Reduction (SCR) Catalyst is used in combination with the Diesel Exhaust Fluid system to reduce the amount of NOx gases produced during engine combustion. Excessive fuel or oil entering the exhaust system due to a failed engine component or Fuel Injector can cause the temperature to rise and will result in damage to the SCR Catalyst. The Powertrain Control Module (PCM) monitors the NOx concentration in the engine's exhaust gases using an aftertreatment Intake NOx Sensor and an aftertreatment Outlet NOx Sensor. By comparing these two values, the PCM is able to determine the conversion efficiency of the SCR catalyst and dosing system. The PCM illuminates the MIL immediately when the monitor runs and fails.

WHEN MONITORED:

This monitor has to meet specific engine and aftertreatment conditions to run and complete. NOx sensor data is gathered over varying engine speeds and loads. When enough data has been gathered, the diagnostic will run, make a pass/fail decision, and begin to gather data again.

SET CONDITION:

The Powertrain Control Module detects that the NOx conversion across the SCR catalyst is lower than expected.

POSSIBLE CAUSES

Possible Causes
DEGRADED, DILUTED OR INCORRECT DIESEL EXHAUST FLUID
DIESEL EXHAUST FLUID DEPOSITS IN THE DECOMPOSITION TUBE
EXHAUST SYSTEM LEAKS
MALFUNCTIONING DEF DOSING SYSTEM

DEFECTIVE SCR CATALYST

Always perform the Pre-Diagnostic Troubleshooting procedure before proceeding. Refer to PRE-DIAGNOSTIC TROUBLESHOOTING PROCEDURE - 6.7L .

DIAGNOSTIC TEST

1. **ACTIVE DTC**

   NOTE: Troubleshoot all other active NOx Sensor and DEF Dosing System related fault codes before this fault.

   1. Turn the ignition on.
   2. With the scan tool, select View DTCs.

      Is the DTC active?

      Yes

      - Go To 2.

      No

      - Perform the INTERMITTENT CONDITION diagnostic procedure. Refer to **INTERMITTENT CONDITION - 6.7L** .

2. **CHECK THE DIESEL EXHAUST FLUID**
   1. Turn the ignition off.
   2. Collect a sample of diesel exhaust fluid from the system.
   3. Visually inspect the fluid for signs of contamination or debris.
   4. Test the quality of the fluid using litmus paper (supplied by parts) or by using the SPX DEF/UREA Refractometer 94-F-00K-108-456 or equivalent.

      NOTE: The diesel exhaust fluid should register approximately 9 ph with the litmus paper and 32.5 percent using a refractometer.

      Is the diesel exhaust fluid quality within specification and free of debris and contamination?

      Yes

      - Go To 3.

      No

      - Drain the diesel exhaust fluid from the tank and fill the system. If the fluid is contaminated, follow the cleaning procedure. Refer to **TANK, DIESEL EXHAUST FLUID,**

CLEANING .

- Perform the POWERTRAIN VERIFICATION TEST. Refer to **POWERTRAIN VERIFICATION TEST - 6.7L** .

3. **CHECK FOR DIESEL EXHAUST FLUID LEAK**
   1. Turn the ignition on.
   2. With the scan tool, navigate to Systems Tests and actuate the DEF Prime Test.

      NOTE: This will pressurize the system, making a leak easier to see.

   3. Inspect for signs of a Diesel Exhaust Fluid leak at:
      - DEF Tank connectors.
      - DEF Injector and Injector connectors.
      - DEF Heater Lines.
      - DEF Supply Pump Assembly.

      NOTE: Diesel exhaust fluid will form white deposits around leaky fittings.

      Were any leaks found?

      Yes

      - Repair or replace the faulty component in accordance with the service information.
      - Perform the POWERTRAIN VERIFICATION TEST. Refer to **POWERTRAIN VERIFICATION TEST - 6.7L** .

      No

      - Go To 4.

4. **CHECK THE EXHAUST SYSTEM FOR LEAKS**
   1. Visually inspect the entire exhaust system for signs of a leak.

      Were any exhaust leaks found?

      Yes

      - Perform the appropriate repair.
      - Perform the POWERTRAIN VERIFICATION TEST. Refer to **POWERTRAIN VERIFICATION TEST - 6.7L** .

      No

      - Go To 5.

5. **CHECK FOR DEPOSITS IN THE DECOMPOSITION TUBE**

1. Remove the DEF Injector from the Decomp Tube. Refer to **INJECTOR, DIESEL EXHAUST FLUID, REMOVAL** .
2. Visually inspect the Decomp Tube for diesel exhaust fluid deposits.

   Were any deposits found?

   Yes

   - Clean the deposits from the Decomp Tube.
   - Perform the POWERTRAIN VERIFICATION TEST. Refer to **POWERTRAIN VERIFICATION TEST - 6.7L** .

   No

   - Go To 6.

6. **CHECK THE DEF INJECTOR OPERATION**
   1. Reconnect the DEF Injector harness connector.
   2. Place the DEF Injector in a container to capture the fluid sprayed.
   3. Turn the ignition on.
   4. With the scan tool, navigate to Systems Tests and actuate the Diesel Exhaust Fluid Doser Pump Override Test.

      NOTE: **This Test will run for six minutes before timing out. The amount of flow may fluctuate through out the test, therefore the test must be allowed to run completely in order for the results to be accurate. The fluid should spray out as a mist. There should be no dripping from the holes in the DEF Injector at any time during the duration of the test procedure.**

   5. Measure the amount of fluid sprayed after the test times out

      Does the fluid sprayed measure between 85 ml and 115 ml?

      Yes

      - Replace the SCR Catalyst in accordance with the service information. Refer to **CATALYST, SELECTIVE CATALYTIC REDUCTION (SCR), REMOVAL** .
      - Perform the POWERTRAIN VERIFICATION TEST. Refer to **POWERTRAIN VERIFICATION TEST - 6.7L** .

      No

      - Replace the DEF Supply Pump Assembly Filter in accordance with the service information. Refer to **FILTER, DIESEL EXHAUST FLUID, REMOVAL** . Perform the Diesel Exhaust Fluid Doser Pump Override Test again. If the system passes, then the repair is complete. If

the system fails the test again, replace the DEF Supply Pump Assembly in accordance with the service information. Refer to **ASSEMBLY, DIESEL EXHAUST FLUID PUMP, REMOVAL** .

- Perform the POWERTRAIN VERIFICATION TEST. Refer to **POWERTRAIN VERIFICATION TEST - 6.7L** .

P20FE-(DIESEL EXHAUST FLUID) REDUCTANT METERING UNIT PERFORMANCE

For a complete wiring diagram, **refer to appropriate SYSTEM WIRING DIAGRAMS article** .

THEORY OF OPERATION

The Diesel Exhaust Fluid (DEF) Dosing Control Unit is used to control the operation and monitoring of the Diesel Exhaust Fluid system. The DEF Dosing Control Unit shares information with the Powertrain Control Module over the J1939 Data Link.

WHEN MONITORED:

Continuously with the ignition on.

SET CONDITION:

The DEF Dosing Control Unit reports an internal malfunction of the DEF Supply Pump Assembly to the PCM over the J1939 Data Link.

POSSIBLE CAUSES

Possible Causes
DEF SUPPLY PUMP ASSEMBLY

Always perform the Pre-Diagnostic Troubleshooting procedure before proceeding. Refer to PRE-DIAGNOSTIC TROUBLESHOOTING PROCEDURE - 6.7L .

DIAGNOSTIC TEST

1. **ACTIVE DTC**
    1. Ignition on, engine not running.
    2. With the scan tool, read DTCs.

    Is the DTC Active?

    Yes

    - Replace the DEF Supply Pump Assembly in accordance with the service information. Refer to **ASSEMBLY, DIESEL EXHAUST FLUID PUMP, REMOVAL** .
    - Perform the POWERTRAIN VERIFICATION TEST. Refer to **POWERTRAIN**

VERIFICATION TEST - 6.7L .

No

- Perform the INTERMITTENT CONDITION diagnostic procedure. Refer to **INTERMITTENT CONDITION - 6.7L** .

P20FF-(DIESEL EXHAUST FLUID) REDUCTANT CONTROL MODULE PERFORMANCE

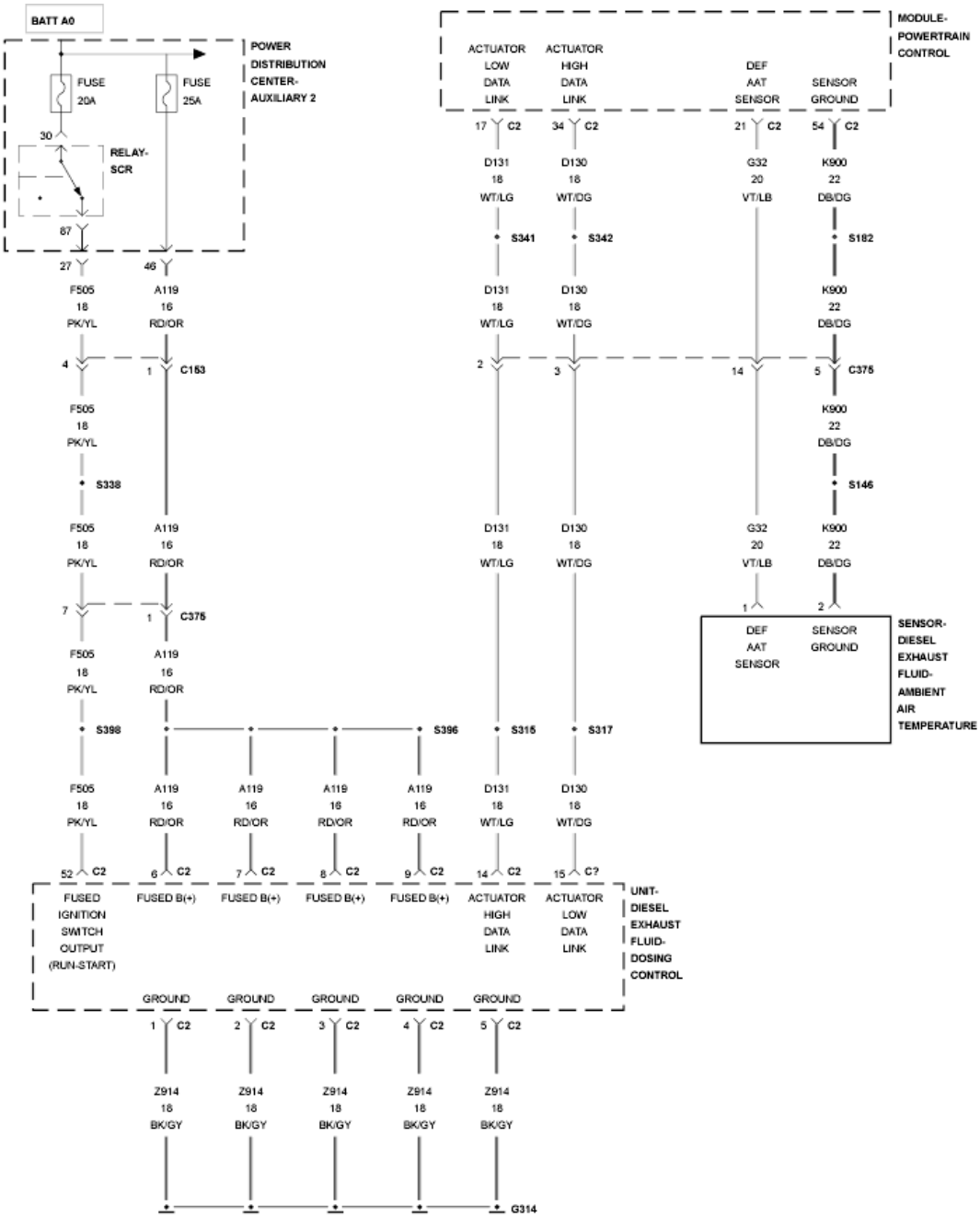

Fig. 138: Diesel Exhaust Fluid (DEF) Dosing Control Unit Wiring Diagram

Courtesy of CHRYSLER GROUP, LLC

For a complete wiring diagram, **refer to appropriate SYSTEM WIRING DIAGRAMS article** .

THEORY OF OPERATION

The Diesel Exhaust Fluid (DEF) Dosing Control Unit is used to control the operation and monitoring of the Diesel Exhaust Fluid system. The DEF Dosing Control Unit shares information with the Powertrain Control Module over the J1939 Data Link.

WHEN MONITORED:

Continuously with the ignition on.

SET CONDITION:

The DEF Dosing Control Unit reports an internal error to the PCM over the J1939 Data Link.

POSSIBLE CAUSES

Possible Causes
DEF DOSING CONTROL UNIT

Always perform the Pre-Diagnostic Troubleshooting procedure before proceeding. Refer to PRE-DIAGNOSTIC TROUBLESHOOTING PROCEDURE - 6.7L .

DIAGNOSTIC TEST

1. **ACTIVE DTC**
    1. Ignition on, engine not running.
    2. With the scan tool, read DTCs.

    Is the DTC Active?

    Yes

    - Replace the DEF Dosing Control Unit in accordance with the service information. Refer to **UNIT, DIESEL EXHAUST FLUID DOSING CONTROL, REMOVAL** .
    - Perform the POWERTRAIN VERIFICATION TEST. Refer to **POWERTRAIN VERIFICATION TEST - 6.7L** .

    No

    - Perform the INTERMITTENT CONDITION diagnostic procedure. Refer to **INTERMITTENT CONDITION - 6.7L** .

P2121-ACCELERATOR PEDAL POSITION SENSOR 1 PERFORMANCE

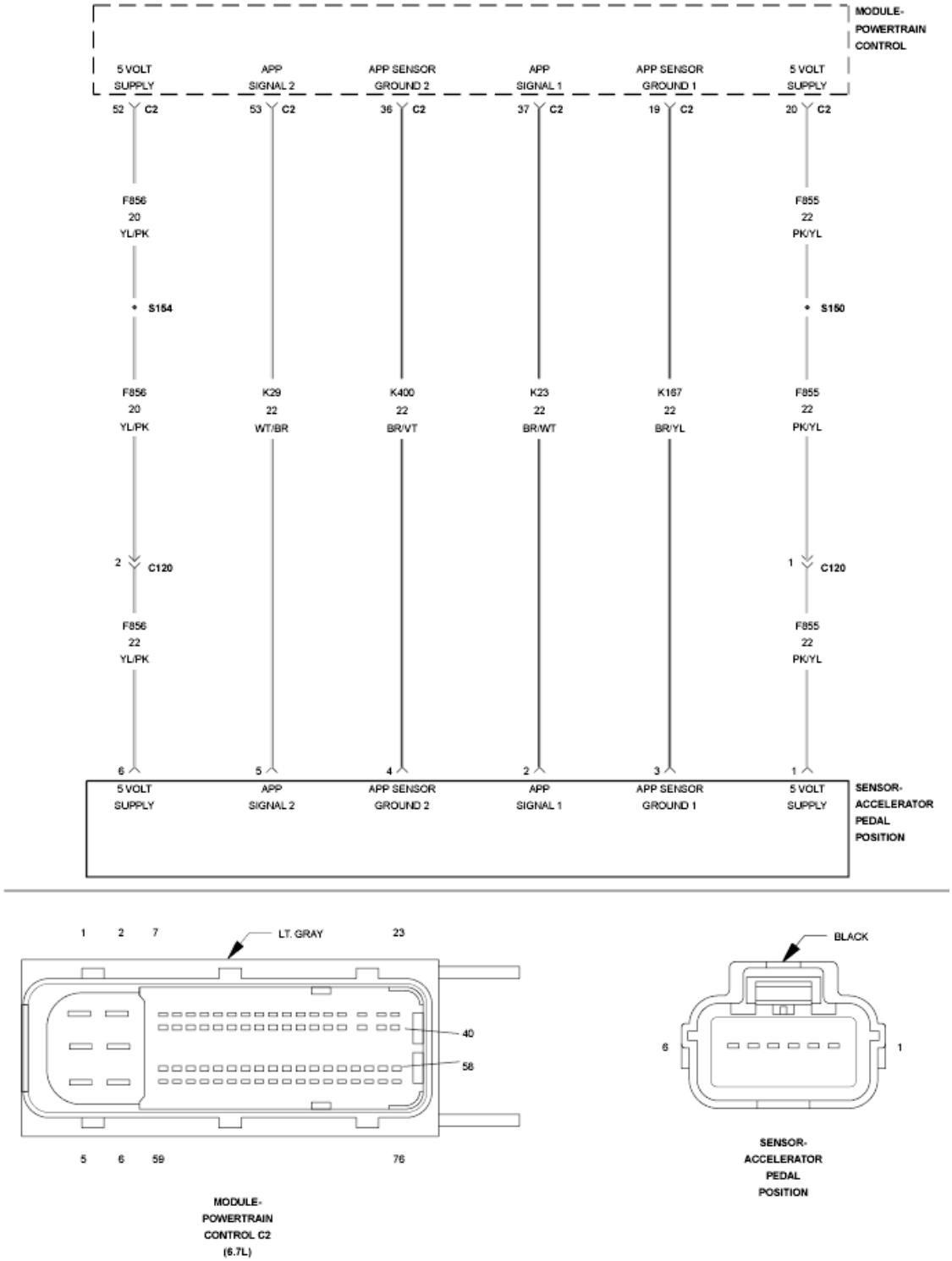

Fig. 139: Accelerator Pedal Position Sensor Circuit Schematic
Courtesy of CHRYSLER GROUP, LLC

For a complete wiring diagram, **refer to appropriate SYSTEM WIRING DIAGRAMS article** .

THEORY OF OPERATION

The throttle pedal produces two voltage signals proportional to the pedal position. The primary signal varies between 0 and 5.0 Volts and the secondary signal varies between 0 and 2.5 Volts. The Powertrain Control Module (PCM) uses the two signals to validate throttle pedal position to control engine fueling. The PCM illuminates the MIL lamp and ETC light solid immediately after the diagnostic runs and fails. Acceleration rate and engine output are limited. The PCM will turn off the MIL lamp after the diagnostic runs and passes in four consecutive drive cycles.

WHEN MONITORED:

Any time the Powertrain Control Module is powered up.

SET CONDITION:

The Powertrain Control Module (PCM) detected a conformance error between APPS 1 and APPS 2.

POSSIBLE CAUSES

Possible Causes
WIRING HARNESS OR CONNECTOR DAMAGED
APP SENSOR
POWERTRAIN CONTROL MODULE (PCM)

Always perform the Pre-Diagnostic Troubleshooting procedure before proceeding. Refer to PRE-DIAGNOSTIC TROUBLESHOOTING PROCEDURE - 6.7L .

DIAGNOSTIC TEST

1. **OTHER DTCS PRESENT**
    1. Using the scan tool, check for any additional APP Sensor fault codes.

       Do you have any additional APP Sensor faults?

       Yes

       - Troubleshoot other DTCs first,
       - Go To 2.

       No

       - Perform the INTERMITTENT CONDITION diagnostic procedure. Refer to **INTERMITTENT CONDITION - 6.7L** .
2. **APP SENSOR HARNESS**
    1. Verify that the APP Sensor harness connector is connected.
    2. Inspect the harness and the APP Sensor harness connector.

Are any pins damaged?

Yes

- Repair or replace the harness.
- Perform the POWERTRAIN VERIFICATION TEST. Refer to **POWERTRAIN VERIFICATION TEST - 6.7L** .

No

- Go To 3.

3. **CHECK THE APP SENSOR**
   1. Monitor the APPS 1 and APPS 2 voltage with the scan tool while depressing the accelerator pedal.

      Is the voltage transition shown on the scan tool smooth while depressing the accelerator pedal and is the voltage from APPS 1 twice as much +/- 3% as the voltage from APPS 2?

      Yes

      - Go To 4.

      No

      - Replace the APP Sensor.
      - Perform the POWERTRAIN VERIFICATION TEST. Refer to **POWERTRAIN VERIFICATION TEST - 6.7L** .
4. **CHECK THE (K23) APP SENSOR 1 SIGNAL CIRCUIT FOR AN OPEN/HIGH RESISTANCE**
   1. Disconnect the C2 PCM harness connector.
   2. Disconnect the APP Sensor harness connector.

      NOTE: Check connectors - Clean/repair as necessary.

   3. Measure the resistance of the (K23) APPS 1 Signal circuit between the APP Sensor harness connector and the PCM C2 harness connector.

      Is the resistance below 5.0 Ohms?

      Yes

      - Go To 5.

      No

      - Repair the (K23) APPS 1 Signal circuit for an open or high resistance.
      - Perform the POWERTRAIN VERIFICATION TEST. Refer to **POWERTRAIN**

VERIFICATION TEST - 6.7L .

5. **CHECK THE (F855) 5-VOLT SUPPLY CIRCUIT FOR AN OPEN/HIGH RESISTANCE**
    1. Measure the resistance of the (F855) 5-Volt Supply circuit between the APP Sensor connector and the PCM C2 connector.

       Is the resistance below 5.0 Ohms?

       Yes

       - Go To 6.

       No

       - Repair the (F855) 5-Volt Supply circuit for an open or high resistance.
       - Perform the POWERTRAIN VERIFICATION TEST. Refer to **POWERTRAIN VERIFICATION TEST - 6.7L** .
6. **CHECK THE (K23) APP SENSOR 1 SIGNAL CIRCUIT FOR A SHORT TO GROUND**

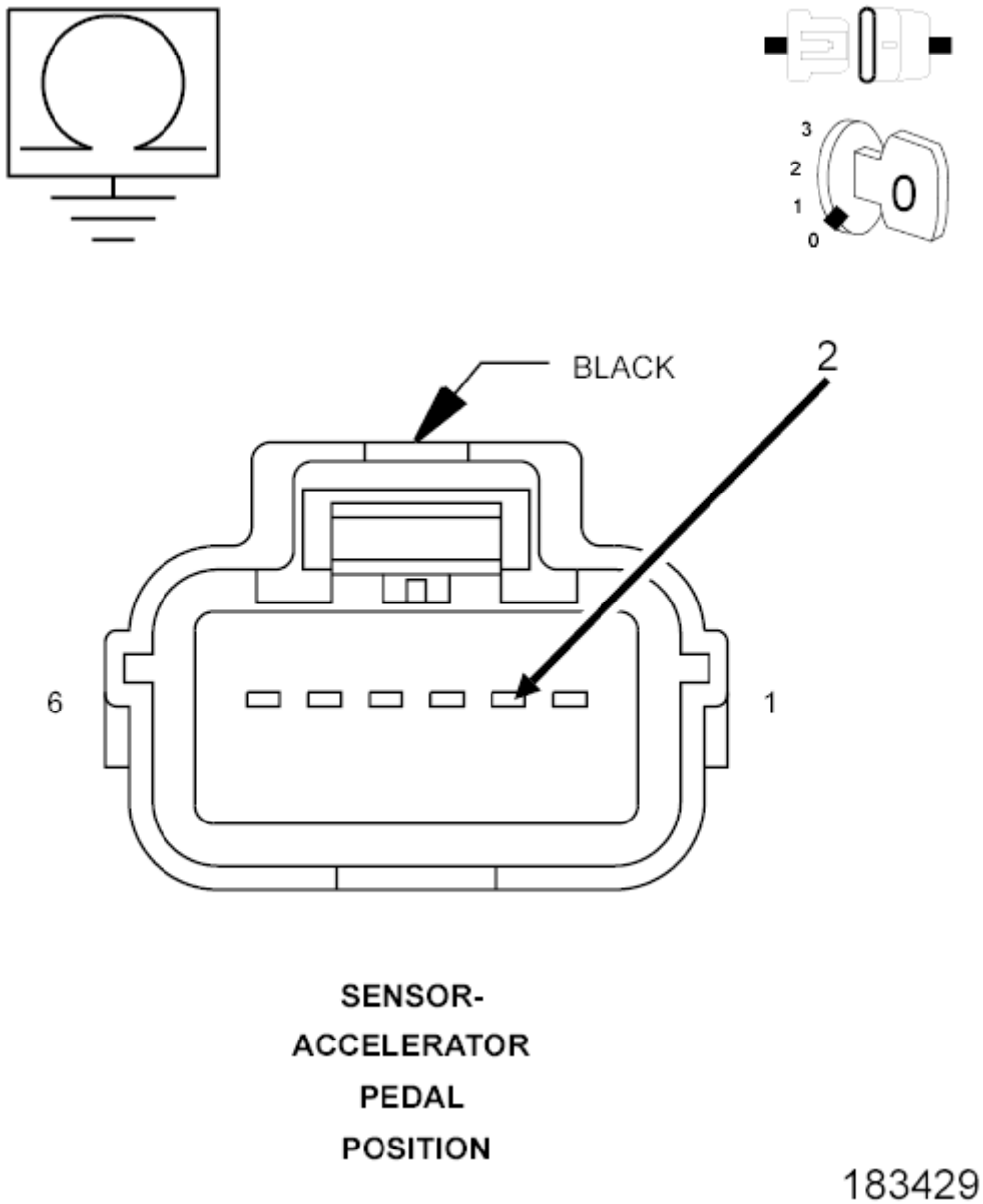

Fig. 140: Measuring Resistance Between Ground And (K23) APP Sensor No. 1 Signal Circuit In APP Sensor Harness Connector
Courtesy of CHRYSLER GROUP, LLC

1. Measure the resistance between ground and the APP Sensor 1 Signal circuit at the APP Sensor harness connector.

   Is the resistance above 10K Ohms?

   Yes

   - Go To 7.

No

- Repair the (K23) APP Sensor 1 Signal circuit for a short to ground.
- Perform the POWERTRAIN VERIFICATION TEST. Refer to **POWERTRAIN VERIFICATION TEST - 6.7L** .

7. **CHECK FOR THE (K23) APP SENSOR 1 SIGNAL CIRCUIT SHORTED TO ANOTHER CIRCUIT**
   1. Measure the resistance between the (K23) APP Sensor 1 Signal circuit and all other circuits in the PCM C2 connector.

      Is the resistance below 10K Ohms between the (K23) APPS 1 Signal circuit and any other circuit?

      Yes

      - Repair the short between the (K23) APP Sensor Signal circuit and the circuit that measured below 10k Ohms.
      - Perform the POWERTRAIN VERIFICATION TEST. Refer to **POWERTRAIN VERIFICATION TEST - 6.7L** .

      No

      - Go To 8.
8. **CHECK THE (F855) 5-VOLT SUPPLY CIRCUIT FOR A SHORT TO GROUND**

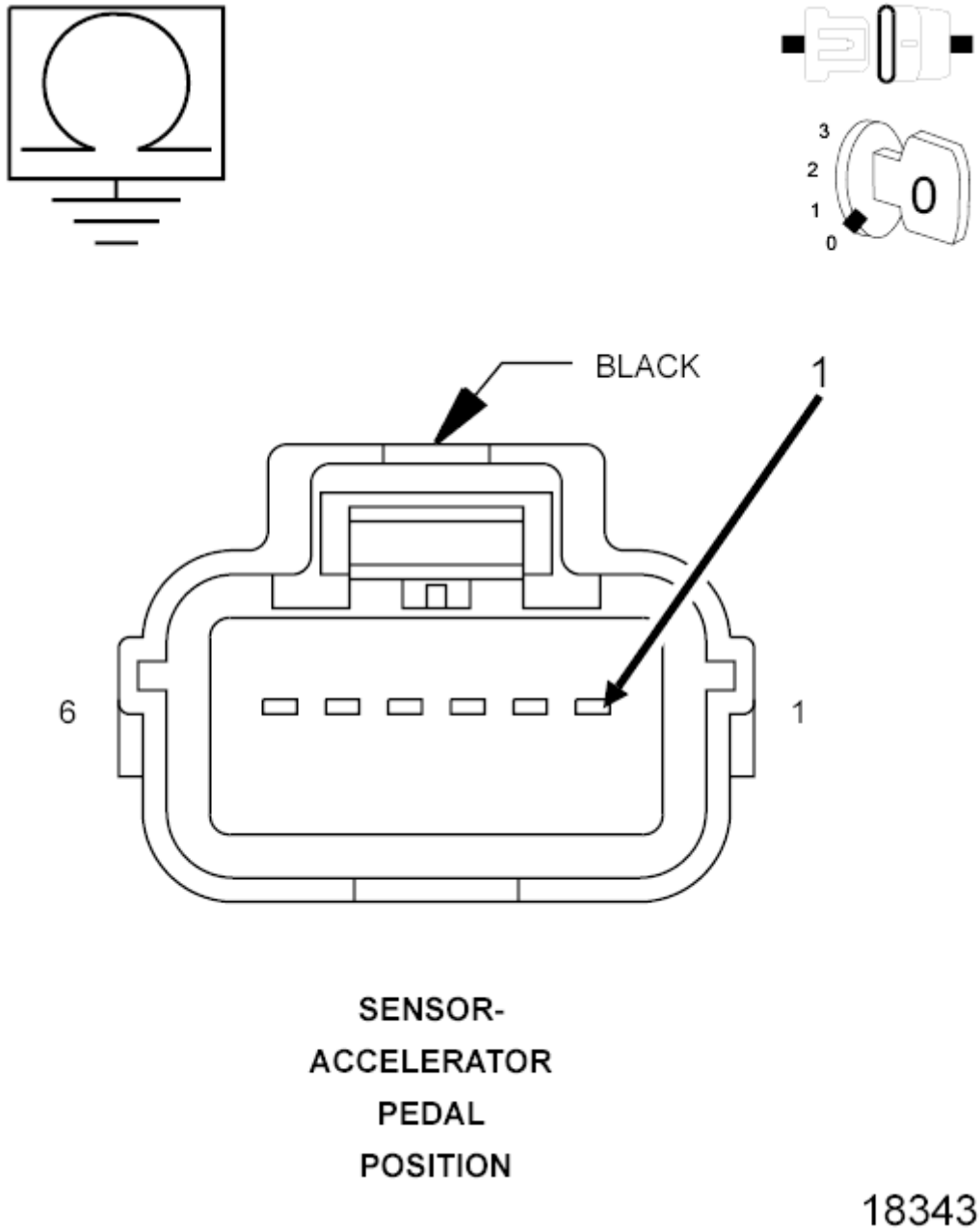

Fig. 141: Measuring Resistance Between Ground And (F855) 5-Volt Supply Circuit In APP Sensor Harness Connector
Courtesy of CHRYSLER GROUP, LLC

1. Measure the resistance between the ground and the (F855) 5-Volt Supply circuit at the APP Sensor harness connector.

   Is the resistance above 10k Ohms?

   Yes

- Repair the (F855) 5-Volt Supply circuit for a short to ground.
- Perform the POWERTRAIN VERIFICATION TEST. Refer to **POWERTRAIN VERIFICATION TEST - 6.7L** .

No

- Go To 9.

9. **CHECK FOR THE (F855) 5-VOLT SUPPLY CIRCUIT SHORTED TO ANOTHER CIRCUIT**
   1. Measure the resistance between the (F855) 5-Volt Supply circuit and all other circuits in PCM C2 harness connector.

      Is the resistance below 10K Ohms between the (F855) 5-Volt Supply circuit and any other circuit?

      Yes

      - Repair the short between the (F855) 5-Volt Supply circuit and the circuit that measured below 10k Ohms.
      - Perform the POWERTRAIN VERIFICATION TEST. Refer to **POWERTRAIN VERIFICATION TEST - 6.7L** .

      No

      - Go To 10.

10. **CHECK THE (K167) APP SENSOR 1 RETURN CIRCUIT FOR AN OPEN/HIGH RESISTANCE**
    1. Measure the resistance of the (K167) APP Sensor 1 Return circuit between the APP Sensor connector and the PCM C2 connector.

       Is the resistance below 5.0 Ohms?

       Yes

       - Go To 11.

       No

       - Repair the (K167) APP Sensor Return circuit for an open or high resistance.
       - Perform the POWERTRAIN VERIFICATION TEST. Refer to **POWERTRAIN VERIFICATION TEST - 6.7L** .

11. **CHECK FOR THE (K23) APP SENSOR 1 SIGNAL CIRCUIT SHORTED TO THE (F855) 5-VOLT SUPPLY CIRCUIT**

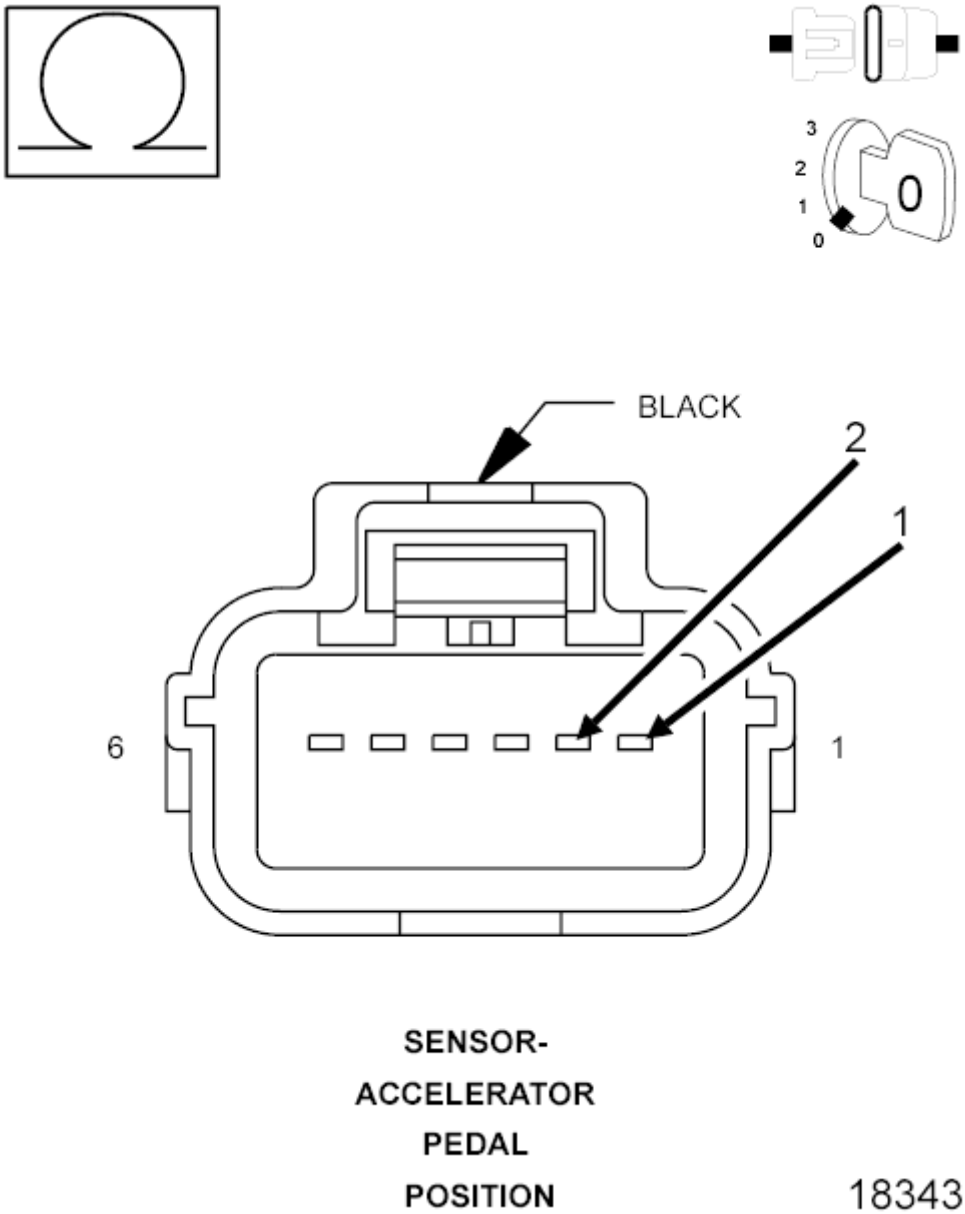

Fig. 142: Measuring Resistance Between (K23) APP Sensor No. 1 Signal Circuit And (F855) 5-Volt Supply Circuit In APP Sensor Harness Connector
Courtesy of CHRYSLER GROUP, LLC

1. Measure the resistance between the (K23) APP Sensor 1 Signal circuit and the (F855) 5-Volt Supply circuit at the APP Sensor harness connector.

   Is the resistance below 10k Ohms?

   Yes

   - Repair the short between the (K23) APP Sensor Signal circuit and the (F855) 5-Volt Supply

circuit.

- Perform the POWERTRAIN VERIFICATION TEST. Refer to **POWERTRAIN VERIFICATION TEST - 6.7L** .

No

- Go To 12.

12. **CHECK FOR THE (K167) APP SENSOR 1 RETURN CIRCUIT SHORTED TO ANOTHER CIRCUIT**
    1. Measure the resistance between the (K167) APP Sensor 1 Return circuit at and all other circuits in the PCM C2 harness connector.

       Is the resistance below 10k Ohms?

       Yes

       - Repair the short between the (K167) APP Sensor 1 Return circuit and the circuit that measured below 10k Ohms.
       - Perform the POWERTRAIN VERIFICATION TEST. Refer to **POWERTRAIN VERIFICATION TEST - 6.7L** .

       No

       - Go To 13.

13. **CHECK THE (K29) APP SENSOR 2 SIGNAL CIRCUIT FOR AN OPEN/HIGH RESISTANCE**
    1. Measure the resistance of the (K29) APP Sensor 2 Signal circuit between the APP Sensor harness connector and the PCM C2 harness connector.

       Is the resistance below 5.0 Ohms?

       Yes

       - Go To 14.

       No

       - Repair the (K29) APP Sensor 2 Signal circuit for an open or high resistance.
       - Perform the POWERTRAIN VERIFICATION TEST. Refer to **POWERTRAIN VERIFICATION TEST - 6.7L** .

14. **CHECK THE (F856) 5-VOLT SUPPLY CIRCUIT FOR AN OPEN/HIGH RESISTANCE**
    1. Measure the resistance of the (F856) 5-Volt Supply circuit between the APP Sensor harness connector and the PCM C2 connector.

       Is the resistance below 5.0 Ohms?

Yes

- Go To 15.

No

- Repair the (F856) 5-Volt Supply circuit for an open or high resistance.
- Perform the POWERTRAIN VERIFICATION TEST. Refer to **POWERTRAIN VERIFICATION TEST - 6.7L** .

15. **CHECK THE (K29) APP SENSOR 2 SIGNAL CIRCUIT FOR A SHORT TO GROUND**

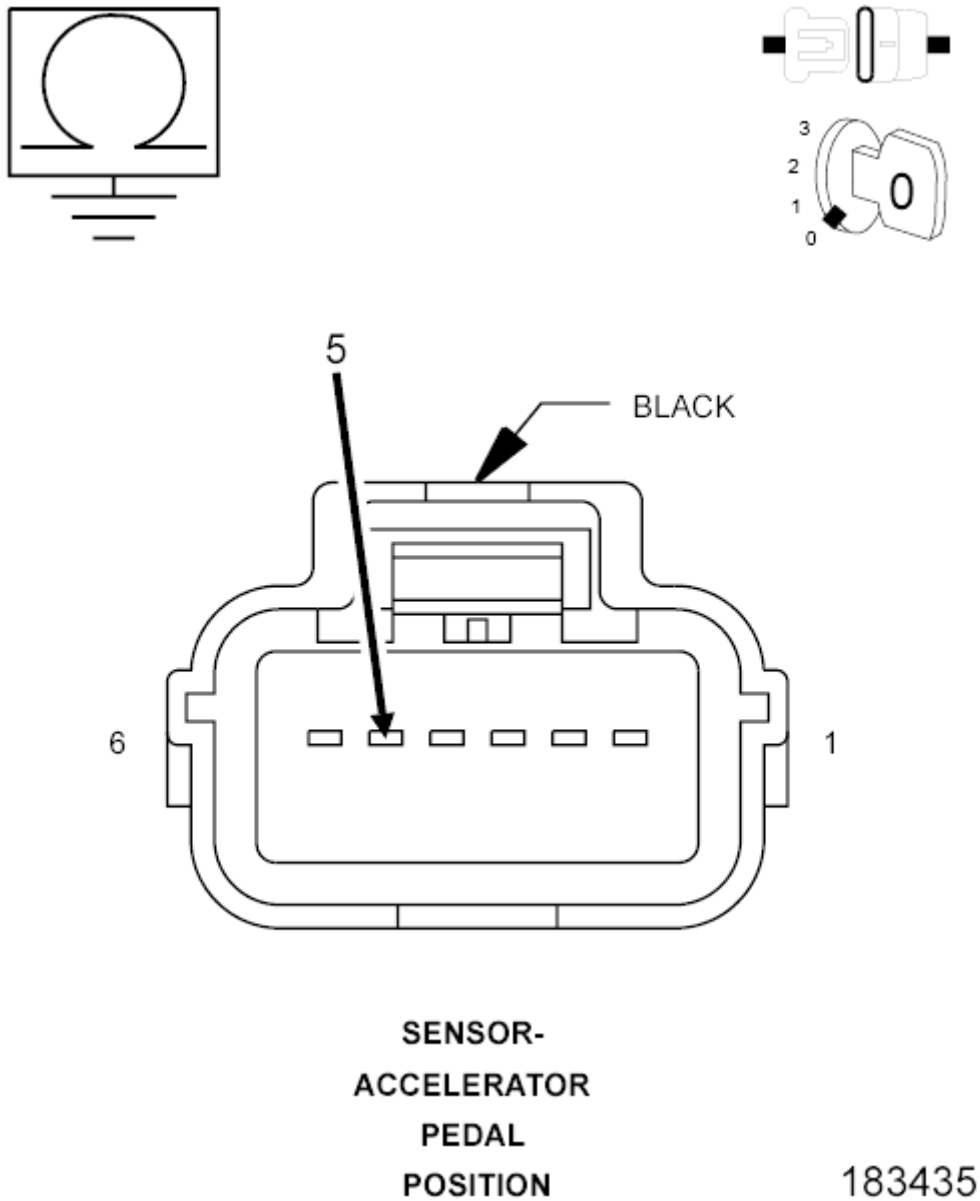

Fig. 143: Measuring Resistance Between Ground And (K29) APP Sensor No. 2 Signal Circuit In

APP Sensor Harness Connector
Courtesy of CHRYSLER GROUP, LLC

1. Measure the resistance between ground and the (K29) APP Sensor 2 Signal circuit at the APP Sensor harness connector.

   Is the resistance below 10k Ohms?

   Yes

   - Repair the (K29) APP Sensor 2 Signal circuit for a short to ground.
   - Perform the POWERTRAIN VERIFICATION TEST. Refer to **POWERTRAIN VERIFICATION TEST - 6.7L** .

   No

   - Go To 16.

16. **CHECK FOR THE (K29) APP SENSOR 2 SIGNAL CIRCUIT SHORTED TO ANOTHER CIRCUIT**
    1. Measure the resistance between the (K29) APP Sensor 2 Signal circuit and all other circuits in the PCM C2 harness connector.

       Is the resistance below 10k Ohms?

       Yes

       - Repair the short between the (K29) APP Sensor 2 Signal circuit and the circuit that measured below 10k Ohms.
       - Perform the POWERTRAIN VERIFICATION TEST. Refer to **POWERTRAIN VERIFICATION TEST - 6.7L** .

       No

       - Go To 17.

17. **CHECK THE (F856) 5-VOLT SUPPLY CIRCUIT FOR A SHORT TO GROUND**

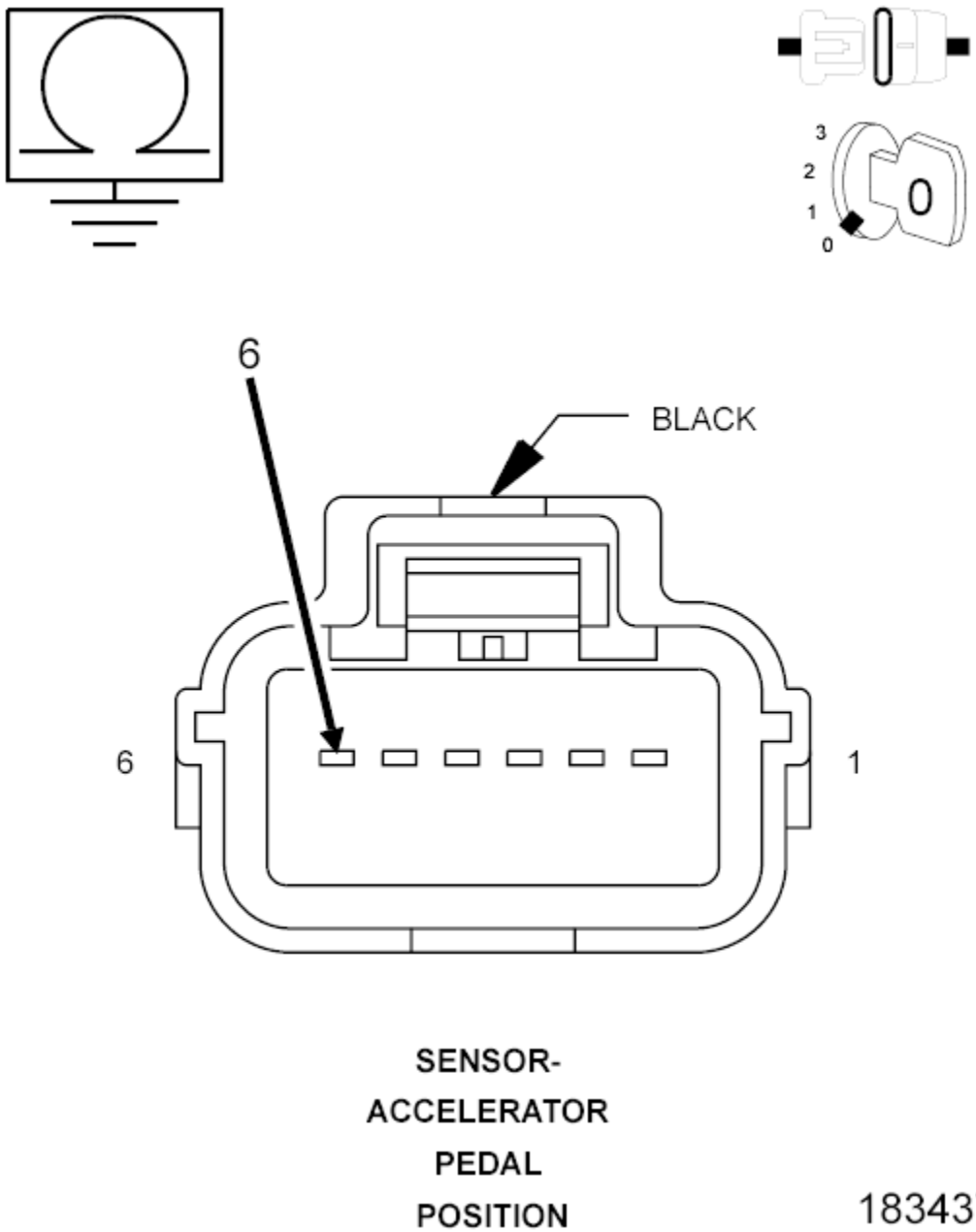

Fig. 144: Measuring Resistance Between Ground And (F856) 5-Volt Supply Circuit In APP Sensor Harness Connector
Courtesy of CHRYSLER GROUP, LLC

1. Measure the resistance between ground and the (F856) 5-Volt Supply circuit at the APP Sensor harness connector.

   Is the resistance below 10k Ohms?

   Yes

- Repair the (F856) 5-Volt Supply circuit for a short to ground.
- Perform the POWERTRAIN VERIFICATION TEST. Refer to **POWERTRAIN VERIFICATION TEST - 6.7L** .

No

- Go To 18.

18. **CHECK FOR THE (F856) 5-VOLT SUPPLY CIRCUIT SHORTED TO ANOTHER CIRCUIT**
    1. Measure the resistance between the (F856) 5-Volt Supply circuit and all other circuits in the PCM C2 harness connector.

       Is the resistance below 10k Ohms?

       Yes

       - Repair the short between the (F856) 5-Volt Supply circuit and the circuit that measured below 10k Ohms.
       - Perform the POWERTRAIN VERIFICATION TEST. Refer to **POWERTRAIN VERIFICATION TEST - 6.7L** .

       No

       - Go To 19.

19. **CHECK THE (K400) APP SENSOR 2 RETURN CIRCUIT FOR AN OPEN/HIGH RESISTANCE**
    1. Measure the resistance of the (K400) APP Sensor 2 Return circuit between the APP Sensor harness connector and the PCM C2 harness connector.

       Is the resistance below 5.0 Ohms?

       Yes

       - Go To 20.

       No

       - Repair the (K400) APP Sensor 2 Return circuit for an open or high resistance.
       - Perform the POWERTRAIN VERIFICATION TEST. Refer to **POWERTRAIN VERIFICATION TEST - 6.7L** .

20. **CHECK FOR THE (K29) APP SENSOR 2 SIGNAL CIRCUIT SHORTED TO THE (F856) 5-VOLT SUPPLY CIRCUIT**

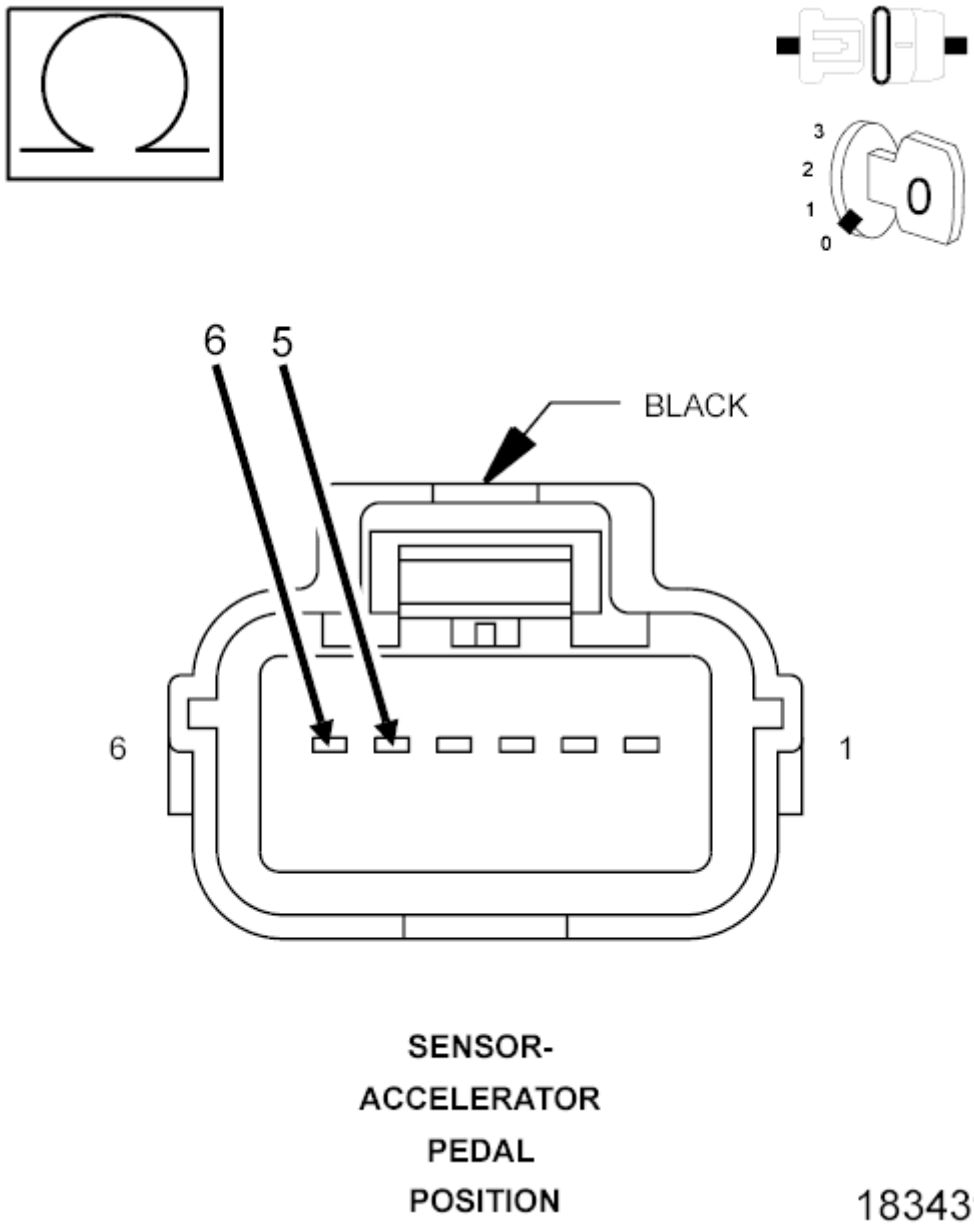

Fig. 145: Measuring Resistance Between (K29) APP Sensor No. 2 Signal Circuit And (F856) 5-Volt Supply Circuit In APP Sensor Harness Connector
Courtesy of CHRYSLER GROUP, LLC

1. Measure the resistance between the (K29) APP Sensor 2 Signal circuit and the (F856) 5-Volt Supply circuit in the APP Sensor harness connector.

   Is the resistance below 10k Ohms?

   Yes

   - Repair the short between the (K29) APP Sensor 2 Signal circuit and the (F856) 5-Volt

Supply circuit.

- Perform the POWERTRAIN VERIFICATION TEST. Refer to **POWERTRAIN VERIFICATION TEST - 6.7L** .

No

- Go To 21.

21. **CHECK FOR THE (K400) APP SENSOR 2 RETURN CIRCUIT SHORTED TO ANOTHER CIRCUIT**
    1. Measure the resistance between the (K400) APP Sensor 2 Return circuit and all other circuits in the PCM C2 harness connector.

       Is the resistance below 10k Ohms?

       Yes

       - Repair the short between the (K400) APP Sensor 2 Return circuit and the circuit that measured below 10k Ohms.
       - Perform the POWERTRAIN VERIFICATION TEST. Refer to **POWERTRAIN VERIFICATION TEST - 6.7L** .

       No

       - Go To 22.

22. **POWERTRAIN CONTROL MODULE**
    1. Reconnect the PCM connectors.
    2. Reconnect the APP Sensor connector.
    3. Turn Ignition on, engine off.
    4. While monitoring with the scan tool, disconnect the APP Sensor harness connector.

       Did a APP Sensor 1 and APP Sensor 2 voltage low DTC set?

       Yes

       - Go To 23.

       No

       - Replace the Powertrain Control Module in accordance with the service information.
       - Perform the POWERTRAIN VERIFICATION TEST. Refer to **POWERTRAIN VERIFICATION TEST - 6.7L** .

23. **APP SENSOR**
    1. Reconnect the APP Sensor harness connector.
    2. Monitor the APP Sensor 1 and APP Sensor 2 voltage with the scan tool while depressing the

accelerator pedal.

Is the voltage transition shown on the scan tool smooth while depressing the accelerator and is the voltage from APP Sensor 1 twice as much +/- 3% as the voltage from APP Sensor 2?

Yes

- Perform the INTERMITTENT CONDITION diagnostic procedure. Refer to **INTERMITTENT CONDITION - 6.7L** .

No

- Replace the APP Sensor in accordance with the service information.
- Perform the POWERTRAIN VERIFICATION TEST. Refer to **POWERTRAIN VERIFICATION TEST - 6.7L** .

P2122-ACCELERATOR PEDAL POSITION SENSOR 1 CIRCUIT LOW

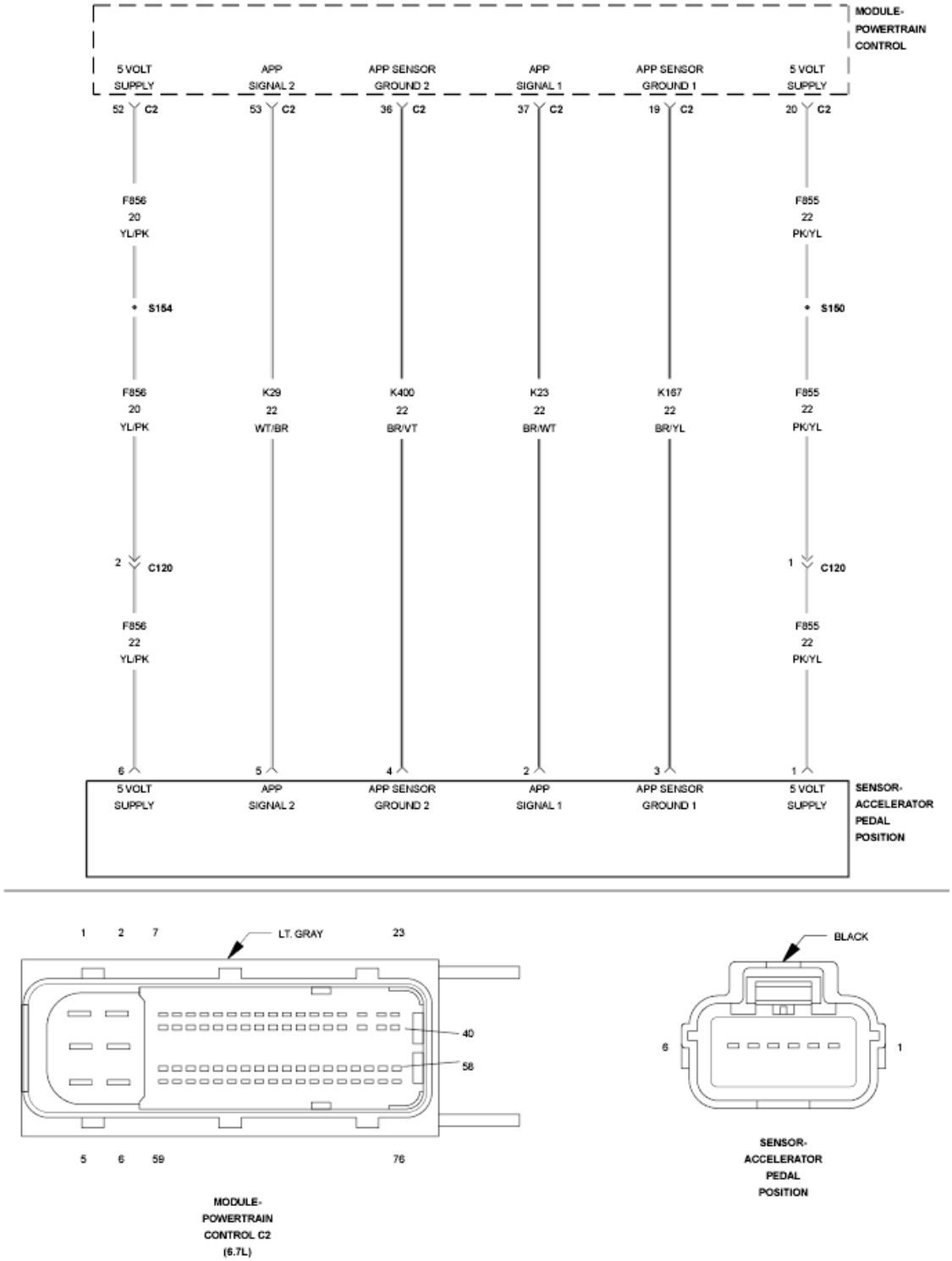

Fig. 146: Accelerator Pedal Position Sensor Circuit Schematic
Courtesy of CHRYSLER GROUP, LLC

For a complete wiring diagram, **refer to appropriate SYSTEM WIRING DIAGRAMS article** .

THEORY OF OPERATION

The throttle pedal produces two voltage signals proportional to the pedal movement. The primary signal varies between 0 and 5.0 Volts and the secondary signal varies between 0 and 2.5 Volts. The Powertrain Control Module (PCM) uses the two signals to validate throttle pedal position to control engine fueling. The PCM illuminates the MIL lamp and ETC light solid immediately after the diagnostic runs and fails. Acceleration rate and Engine output are limited. The PCM will turn off the MIL lamp after the diagnostic runs and passes in four consecutive drive cycles.

WHEN MONITORED:

Any time the Powertrain Control Module is powered up.

SET CONDITION:

When the APP Sensor No. 1 voltage is below 0.13 Volts for one second.

POSSIBLE CAUSES

Possible Causes
(F855) 5-VOLT SUPPLY CIRCUIT OPEN/HIGH RESISTANCE
(F855) 5-VOLT SUPPLY CIRCUIT SHORTED TO GROUND
(K23) APP SENSOR NO. 1 SIGNAL CIRCUIT OPEN/HIGH RESISTANCE
(K23) APP SENSOR NO. 1 SIGNAL CIRCUIT SHORTED TO GROUND
(K23) APP SENSOR NO. 1 SIGNAL CIRCUIT SHORTED TO THE (K167) APP SENSOR NO. 1 RETURN CIRCUIT
(K23) APP SENSOR NO. 1 SIGNAL CIRCUIT SHORTED TO THE (K400) APP SENSOR NO. 2 RETURN CIRCUIT
APP SENSOR
POWERTRAIN CONTROL MODULE (PCM)

Always perform the Pre-Diagnostic Troubleshooting procedure before proceeding. Refer to PRE-DIAGNOSTIC TROUBLESHOOTING PROCEDURE - 6.7L .

DIAGNOSTIC TEST

1. **CHECK THE APP SENSOR 1 VOLTAGE**

   NOTE: When this DTC is Active the engine speed, torque, and vehicle speed are limited to a Limp in mode.

   1. Ignition on, engine not running.
   2. With a scan tool, read the APP Sensor No. 1 voltage.

      Is the voltage below 0.13 of a Volt?

Yes

- Go To 2.

No

- Go To 11.

2. **CHECK THE (F855) 5-VOLT SUPPLY CIRCUIT**

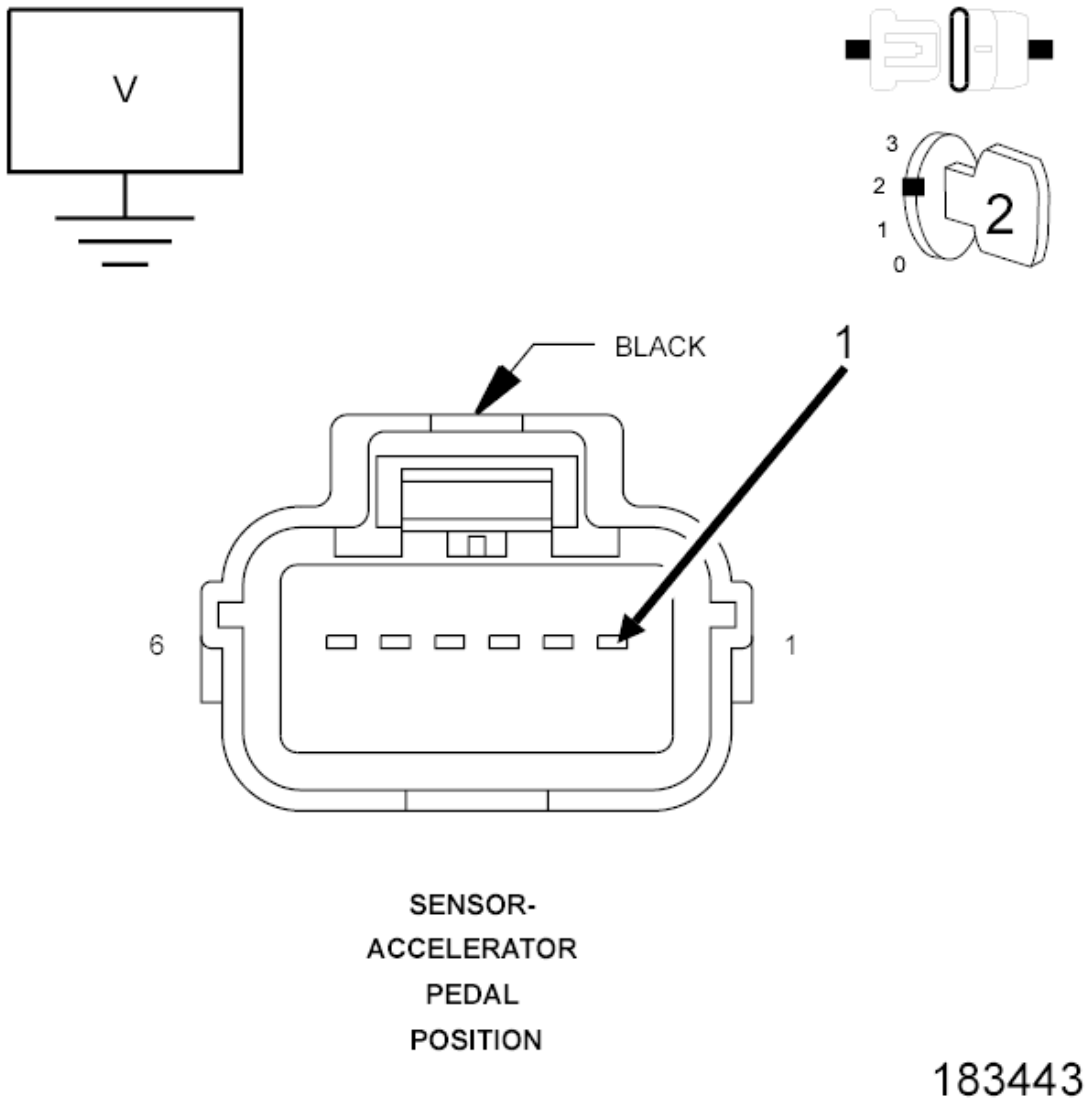

Fig. 147: Measuring Voltage On (F855) 5-Volt Supply Circuit In APP Sensor Harness Connector
Courtesy of CHRYSLER GROUP, LLC

1. Turn the ignition off.
2. Disconnect the APP Sensor harness connector.
3. Ignition on, engine not running.

4. Measure the voltage on the (F855) 5-Volt Supply circuit in the APP Sensor harness connector.

   Is the voltage between 4.65 and 5.36 Volts?

   Yes

   - Go To 3.

   No

   - Go To 8.

3. **CHECK THE ACCELERATOR PEDAL POSITION SENSOR**

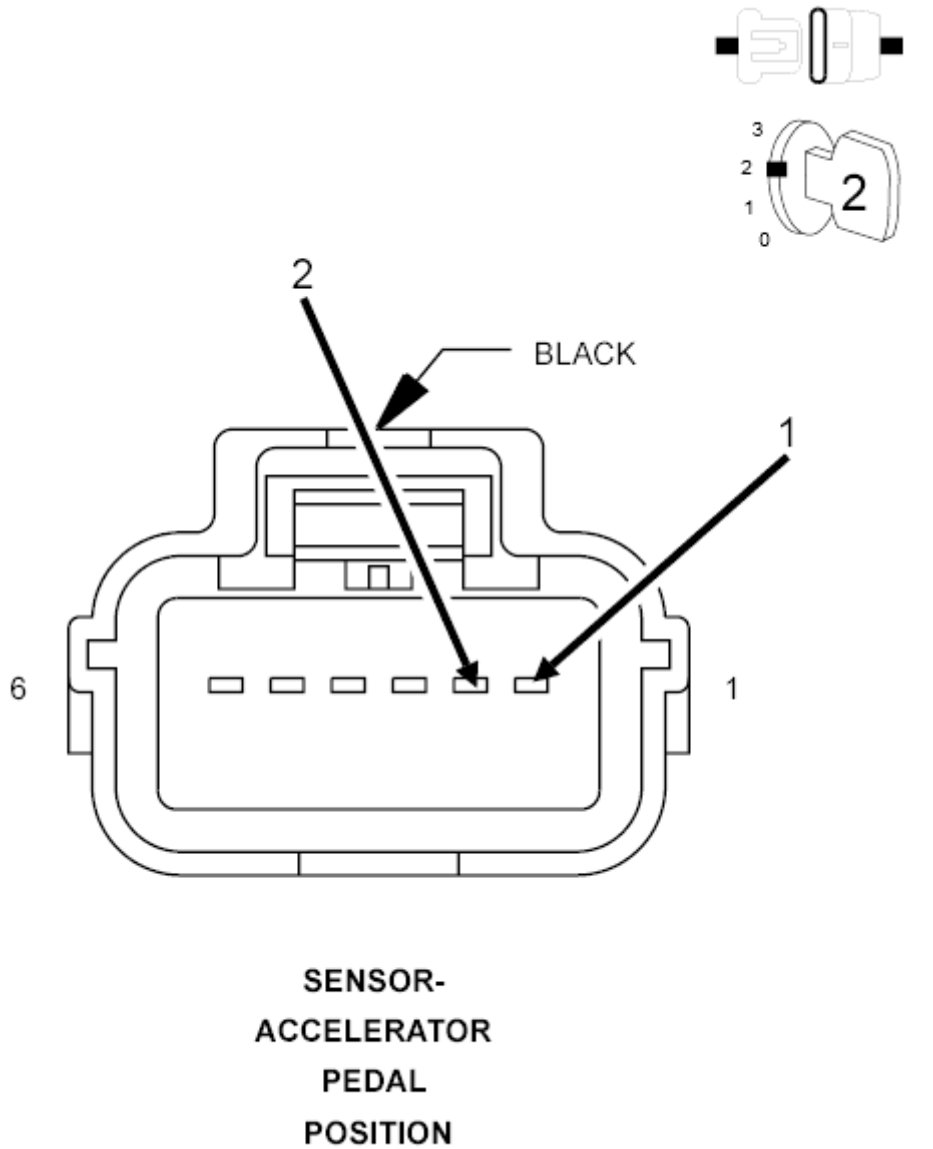

Fig. 148: Accelerator Pedal Position Sensor
Courtesy of CHRYSLER GROUP, LLC

1. Connect a jumper wire between the (F855) 5-Volt Supply circuit and the (K23) APP Sensor No. 1 Signal circuit in the APP Sensor harness connector.
2. With a scan tool, monitor the APP Sensor No. 1 voltage.

   Is the voltage reading between 4.65 and 5.36 Volts?

   Yes

   - Replace the APP Sensor Assembly in accordance with the Service Information. After installation is complete, use a scan tool and select the ETC RELEARN function to relearn the APPS values.
   - Perform the POWERTRAIN VERIFICATION TEST. Refer to **POWERTRAIN VERIFICATION TEST - 6.7L** .

   No

   - Go To 4.

4. **CHECK THE (K23) APP SENSOR NO. 1 SIGNAL CIRCUIT FOR AN OPEN/HIGH RESISTANCE**

   NOTE: Remove the jumper wire before continuing.

   1. Turn the ignition off.
   2. Disconnect the C2 PCM harness connector.
   3. Measure the resistance of the (K23) APP Sensor No. 1 Signal circuit from the APP Sensor harness connector to the C2 PCM harness connector.

      Is the resistance below 5.0 Ohms?

      Yes

      - Go To 5.

      No

      - Repair the (K23) APP Sensor No. 1 Signal circuit for an open or high resistance.
      - Perform the POWERTRAIN VERIFICATION TEST. Refer to **POWERTRAIN VERIFICATION TEST - 6.7L** .

5. **CHECK THE (K23) APP SENSOR NO. 1 SIGNAL CIRCUIT FOR A SHORT TO GROUND**

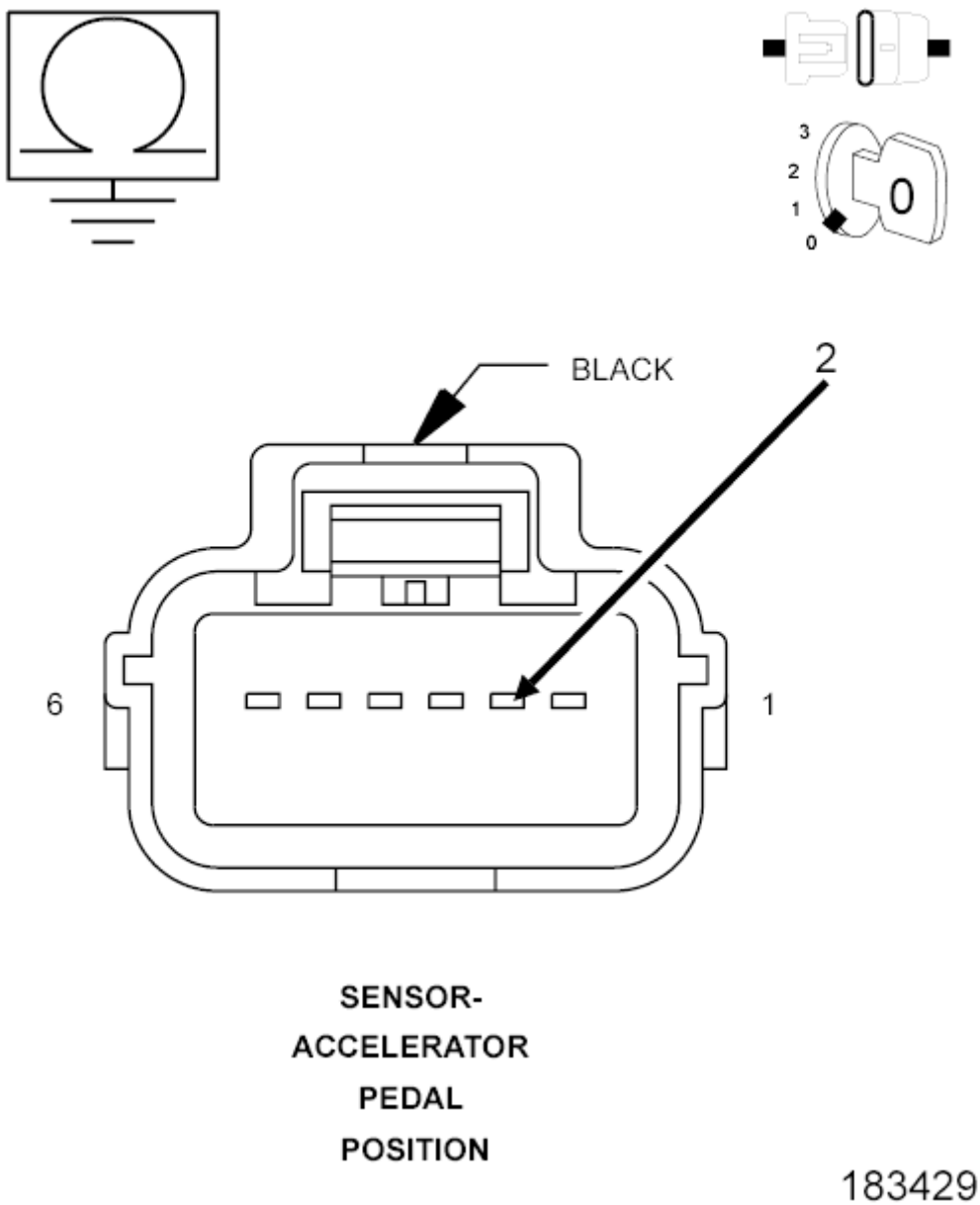

Fig. 149: Measuring Resistance Between Ground And (K23) APP Sensor No. 1 Signal Circuit In APP Sensor Harness Connector
Courtesy of CHRYSLER GROUP, LLC

1. Measure the resistance between ground and the (K23) APP Sensor No. 1 Signal circuit in the APP Sensor harness connector.

   Is the resistance below 10k Ohms?

   Yes

   - Repair the (K23) APP Sensor No. 1 Signal circuit for a short to ground.

- Perform the POWERTRAIN VERIFICATION TEST. Refer to **POWERTRAIN VERIFICATION TEST - 6.7L** .

No

- Go To 6.

6. **CHECK FOR THE (K23) APP SENSOR NO. 1 SIGNAL CIRCUIT SHORTED TO THE (K167) APP SENSOR NO. 1 RETURN CIRCUIT**

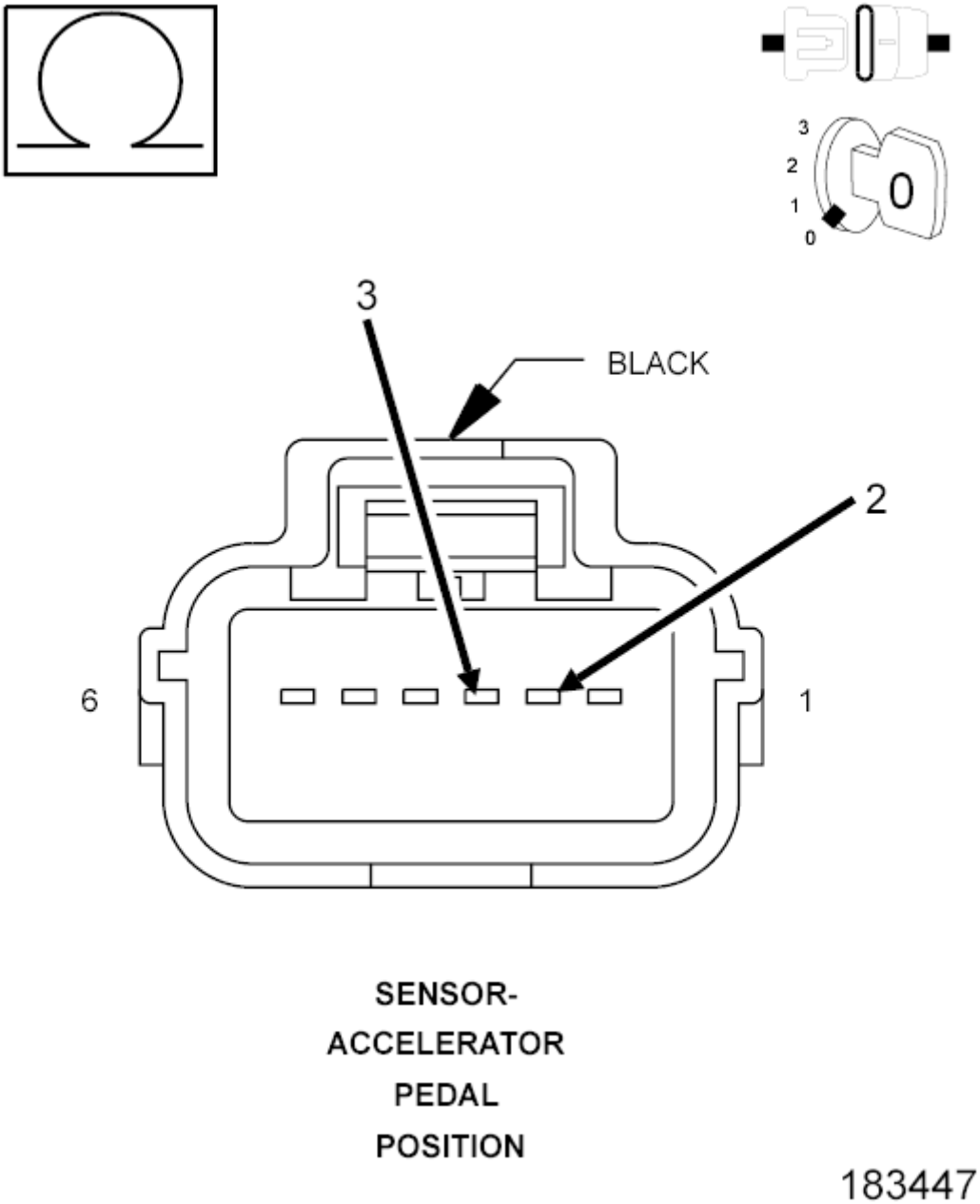

Fig. 150: Measuring Resistance Between (K23) APP Sensor No. 1 Signal Circuit And (K167) Sensor

No. 1 Return Circuit AT APP Sensor Harness Connector
Courtesy of CHRYSLER GROUP, LLC

1. Measure the resistance between the (K23) APP Sensor No. 1 Signal circuit and the (K167) Sensor No. 1 Return circuit at the APP Sensor harness connector.

   Is the resistance below 10k Ohms?

   Yes

   - Repair the short between the (K167) APP Sensor No. 1 Return circuit and the (K23) APP Sensor No. 1 Signal circuit.
   - Perform the POWERTRAIN VERIFICATION TEST. Refer to **POWERTRAIN VERIFICATION TEST - 6.7L** .

   No

   - Go To 7.

7. **CHECK FOR THE (K23) APP SENSOR NO. 1 SIGNAL CIRCUIT SHORTED TO THE (K400) APP SENSOR NO. 2 RETURN CIRCUIT**

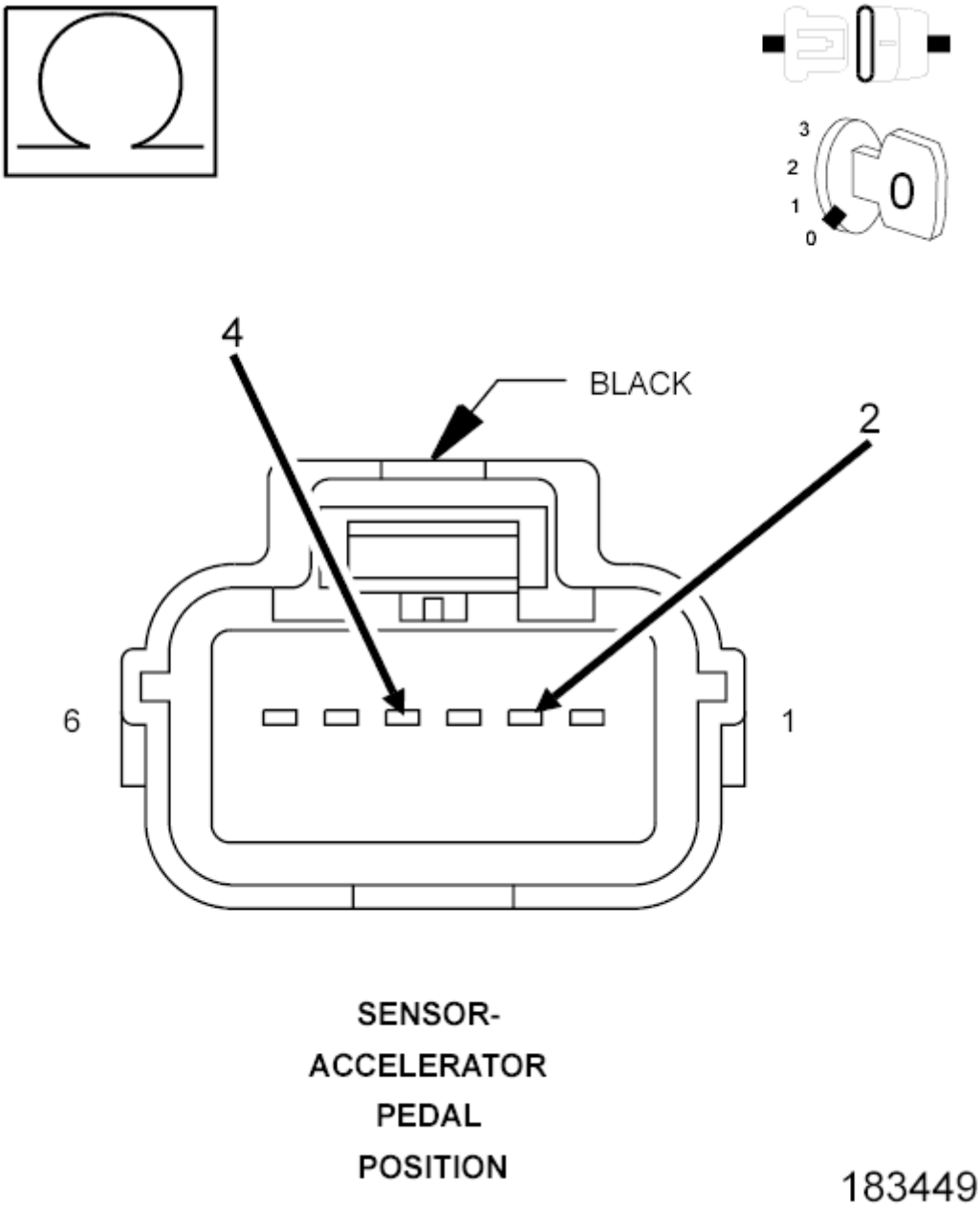

Fig. 151: Measuring Resistance Between (K23) APP Sensor No. 1 Signal Circuit And (K400) APP Sensor No. 2 Return Circuit In APP Sensor Harness Connector
Courtesy of CHRYSLER GROUP, LLC

1. Measure the resistance between the (K23) APP Sensor No. 1 Signal circuit and the (K400) Sensor No. 2 Return circuit in the APP Sensor harness connector.

   Is the resistance below 10k Ohms?

   Yes

- Repair the short between the (K400) APP Sensor No. 2 Return circuit and the (K23) APP Sensor No. 1 Signal circuit.
- Perform the POWERTRAIN VERIFICATION TEST. Refer to **POWERTRAIN VERIFICATION TEST - 6.7L** .

No

- Go To 10.

8. **CHECK THE (F855) 5-VOLT SUPPLY CIRCUIT FOR AN OPEN/HIGH RESISTANCE**
   1. Turn the ignition off.
   2. Disconnect the C2 PCM harness connector.
   3. Measure the resistance of the (F855) 5-Volt Supply circuit from the Sensor harness connector to the C2 PCM harness connector.

      Is the resistance below 5.0 Ohms?

      Yes

      - Go To 9.

      No

      - Repair the (F855) 5-Volt Supply circuit for an open or high resistance.
      - Perform the POWERTRAIN VERIFICATION TEST. Refer to **POWERTRAIN VERIFICATION TEST - 6.7L** .
9. **CHECK THE (F855) 5-VOLT SUPPLY CIRCUIT FOR A SHORT TO GROUND**

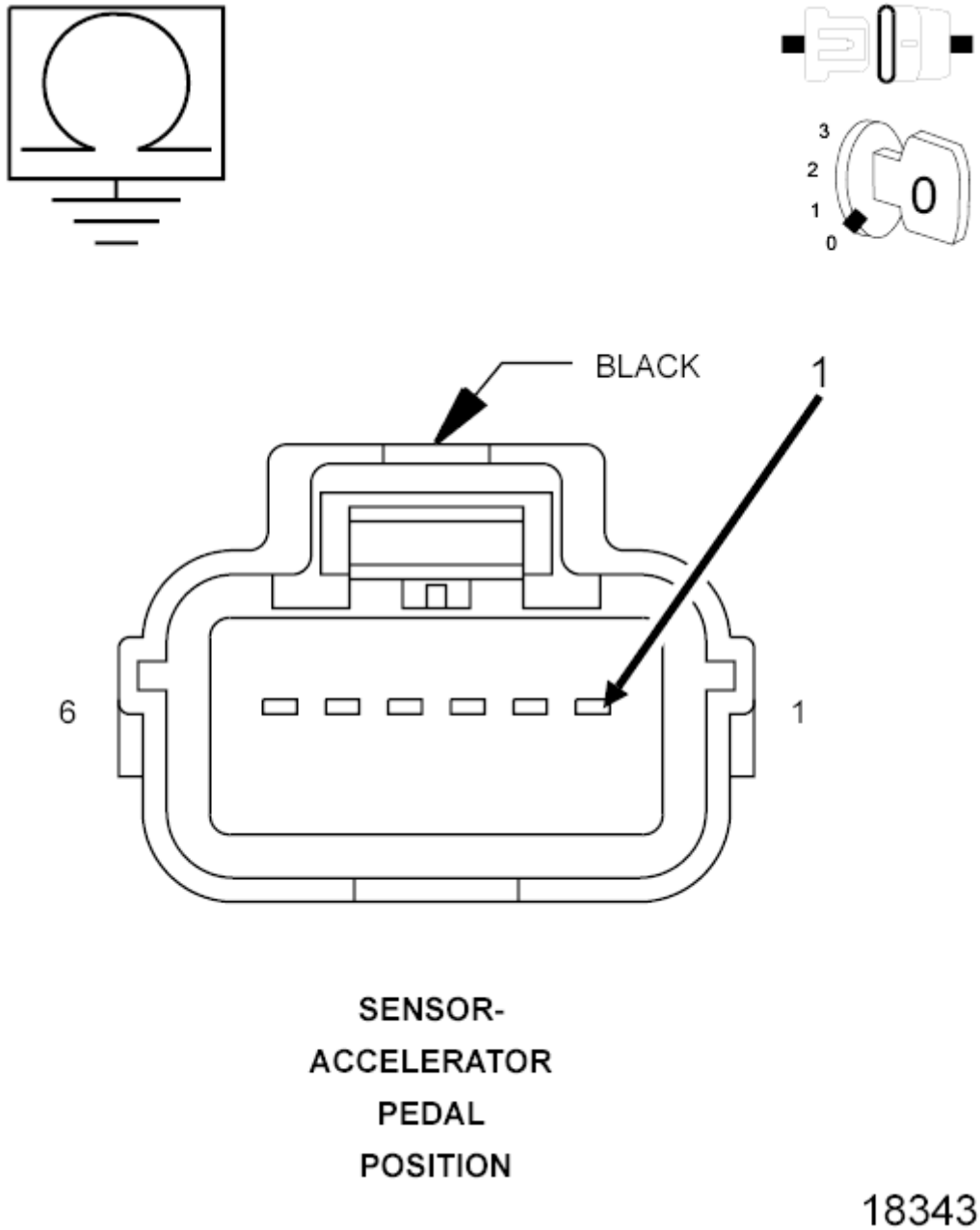

Fig. 152: Measuring Resistance Between Ground And (F855) 5-Volt Supply Circuit In APP Sensor Harness Connector
Courtesy of CHRYSLER GROUP, LLC

1. Measure the resistance between ground and the (F855) 5-Volt Supply circuit in the APP Sensor harness connector.

   Is the resistance below 10k Ohms?

   Yes

- Repair the (F855) 5-Volt Supply circuit or a short to ground.
- Perform the POWERTRAIN VERIFICATION TEST. Refer to **POWERTRAIN VERIFICATION TEST - 6.7L** .

No

- Go To 10.

10. **POWERTRAIN CONTROL MODULE**

NOTE: Before continuing, check the PCM harness connector terminals for corrosion, damage, or terminal push out. Repair as necessary.

1. Using the schematics as a guide, inspect the wire harness and connectors. Pay particular attention to all Power and Ground circuits.

   Were there any problems found?

   Yes

   - Repair as necessary.
   - Perform the POWERTRAIN VERIFICATION TEST. Refer to **POWERTRAIN VERIFICATION TEST - 6.7L** .

   No

   - Replace and program the Powertrain Control Module in accordance with the service information. Refer to **PCM - REMOVAL** , also see **PCM/ECM / TCM PROGRAMMING** .
   - Perform the POWERTRAIN VERIFICATION TEST. Refer to **POWERTRAIN VERIFICATION TEST - 6.7L** .

11. **APP SENSOR SWEEP**

1. Ignition on, engine not running.
2. With a scan tool, monitor the APP Sensor No. 1 voltage.
3. Slowly press the Accelerator pedal down.

   Does voltage start at approximately 0.45 Volts and go above 4.6 Volts with a smooth transition?

   Yes

   - Perform the INTERMITTENT CONDITION diagnostic procedure. Refer to **INTERMITTENT CONDITION - 6.7L** .

   No

   - Replace the APP Sensor Assembly in accordance with the Service Information. After

installation is complete, use a scan tool and select the ETC RELEARN function to relearn the APPS values.

- Perform the POWERTRAIN VERIFICATION TEST. Refer to **POWERTRAIN VERIFICATION TEST - 6.7L** .

P2123-ACCELERATOR PEDAL POSITION SENSOR 1 CIRCUIT HIGH

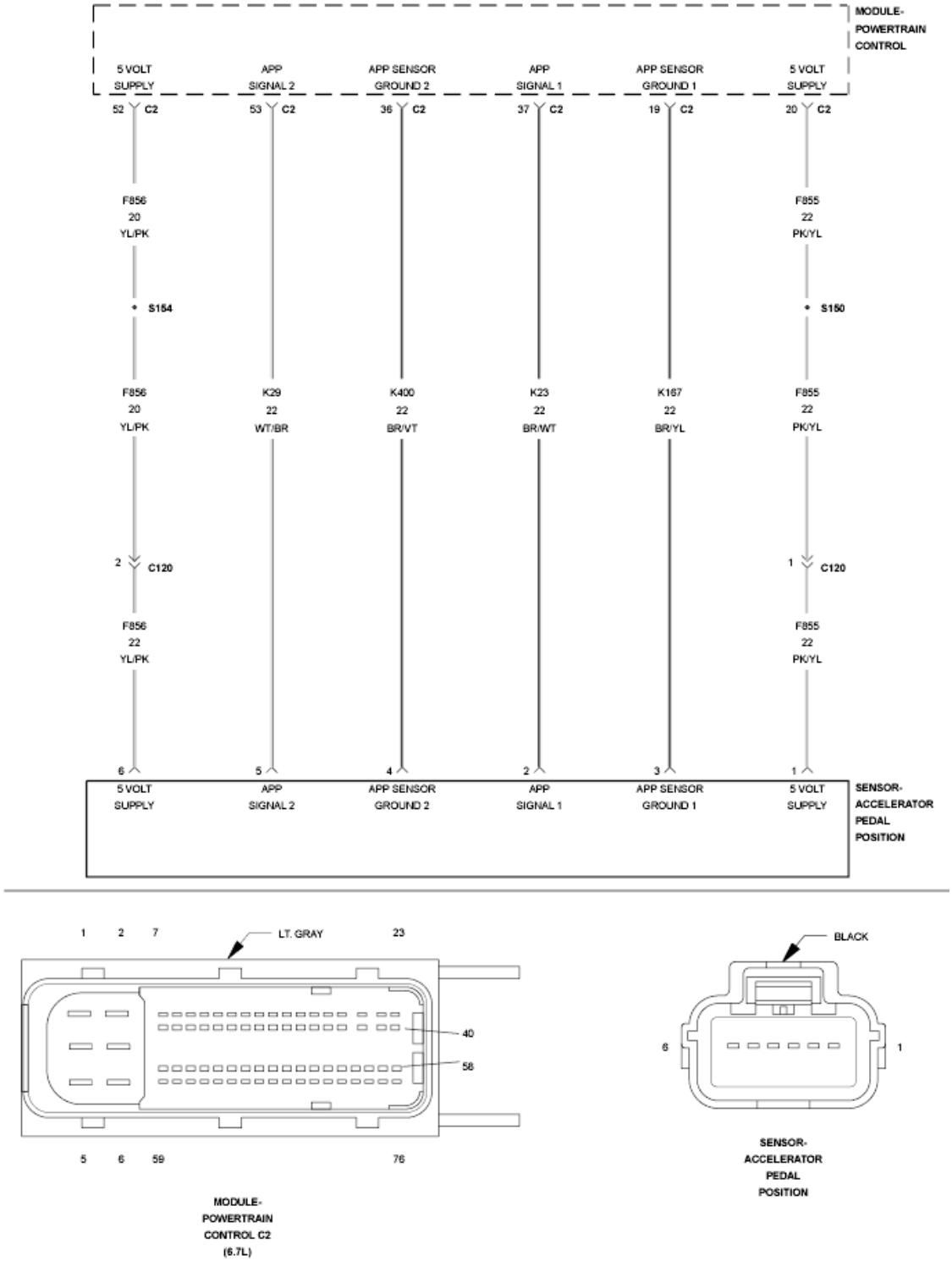

Fig. 153: Accelerator Pedal Position Sensor Circuit Schematic
Courtesy of CHRYSLER GROUP, LLC

For a complete wiring diagram, **refer to appropriate SYSTEM WIRING DIAGRAMS article** .

THEORY OF OPERATION

The throttle pedal produces two voltage signals proportional to the pedal movement. The primary signal varies between 0 and 5.0 Volts and the secondary signal varies between 0 and 2.5 Volts. The Powertrain Control Module (PCM) uses the two signals to validate throttle pedal position to control engine fueling. The PCM illuminates the MIL lamp and ETC light solid immediately after the diagnostic runs and fails. Acceleration rate and Engine output are limited. The PCM will turn off the MIL lamp after the diagnostic runs and passes in four consecutive drive cycles.

WHEN MONITORED:

Any time the Powertrain Control Module is powered up.

SET CONDITION:

When APP Sensor No. 1 voltage is above 4.82 Volts for one second.

POSSIBLE CAUSES

Possible Causes
(K23) APP SENSOR 1 SIGNAL CIRCUIT SHORTED TO BATTERY VOLTAGE
(K23) APP SENSOR 1 SIGNAL SHORTED TO THE (F855) 5-VOLT SUPPLY CIRCUIT
(K23) APP SENSOR 1 SIGNAL SHORTED TO THE (F856) 5-VOLT SUPPLY CIRCUIT
(K167) APP SENSOR 1 RETURN CIRCUIT OPEN
APP SENSOR
POWERTRAIN CONTROL MODULE (PCM)

Always perform the Pre-Diagnostic Troubleshooting procedure before proceeding. Refer to PRE-DIAGNOSTIC TROUBLESHOOTING PROCEDURE - 6.7L .

DIAGNOSTIC TEST

1. **APP SENSOR NO. 1 VOLTAGE ABOVE 4.82 VOLTS**

   NOTE: When this DTC is Active the engine speed, torque, and vehicle speed are limited to a Limp in mode.

   1. Ignition on, engine not running.
   2. With a scan tool, read the APP Sensor No. 1 voltage.

      Is the voltage above 4.82 volts?

      Yes

      - Go To 2.

No

- Go To 8.

2. **ACCELERATOR PEDAL POSITION SENSOR**
   1. Turn the Ignition off.
   2. Disconnect the APP Sensor harness connector.
   3. Ignition on, engine not running.
   4. With a scan tool, monitor the Accelerator Pedal Position Sensor voltage.

   Is the voltage above 0 Volts?

   Yes

   - Go To 3.

   No

   - Replace the APP Sensor Assembly in accordance with the Service Information. After installation is complete, use a scan tool and select the ETC RELEARN function to relearn the APPS values.
   - Perform the POWERTRAIN VERIFICATION TEST. Refer to **POWERTRAIN VERIFICATION TEST - 6.7L** .
3. **(K23) APP SENSOR NO. 1 SIGNAL CIRCUIT SHORTED TO BATTERY VOLTAGE**

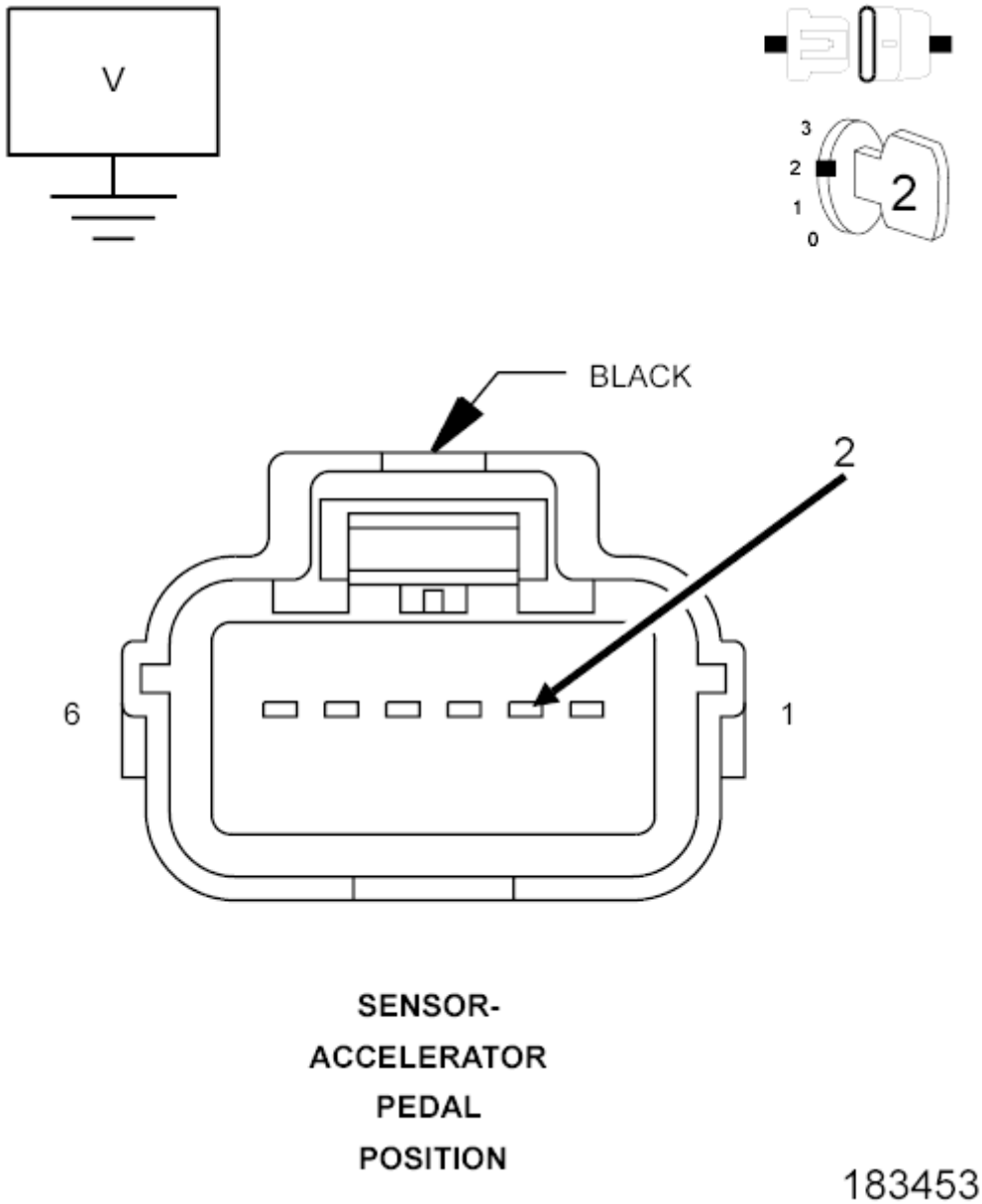

Fig. 154: Measuring Voltage On (K23) APP Sensor No. 1 Signal Circuit In APP Sensor Harness Connector
Courtesy of CHRYSLER GROUP, LLC

1. Turn the ignition off.
2. Disconnect the PCM C2 harness connectors.
3. Ignition on, engine not running.
4. Measure the voltage on the (K23) APP Sensor No. 1 Signal circuit in the APP Sensor harness connector.

   Is the voltage above 0 Volts?

Yes

- Repair the short to battery voltage in the (K23) APP Sensor No. 1 Signal circuit.
- Perform the POWERTRAIN VERIFICATION TEST. Refer to **POWERTRAIN VERIFICATION TEST - 6.7L** .

No

- Go To 4.

4. **(K23) APP SENSOR NO. 1 SIGNAL CIRCUIT SHORTED TO THE (F855) 5-VOLT SUPPLY CIRCUIT**

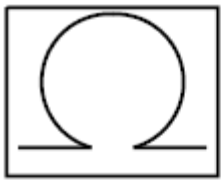

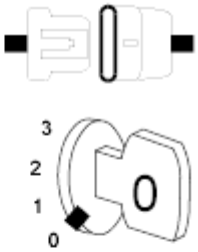

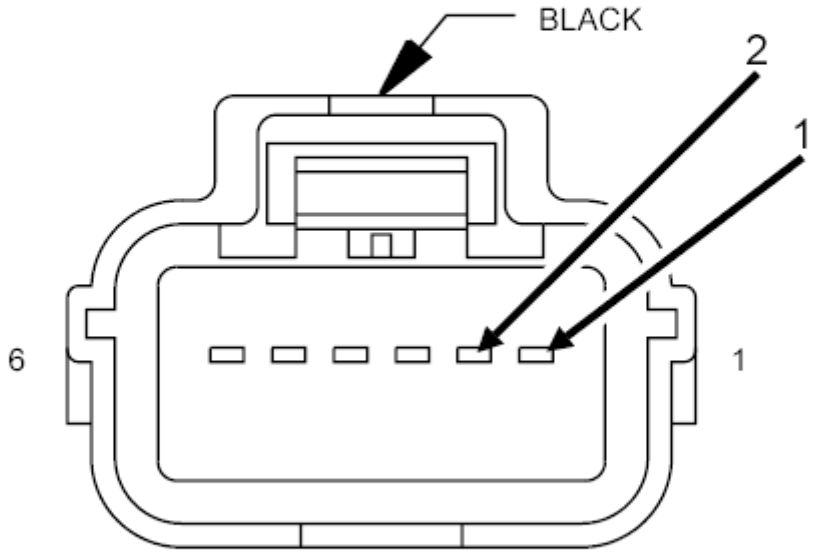

SENSOR-
ACCELERATOR
PEDAL
POSITION

183433

Fig. 155: Measuring Resistance Between (K23) APP Sensor No. 1 Signal Circuit And (F855) 5-Volt Supply Circuit In APP Sensor Harness Connector
Courtesy of CHRYSLER GROUP, LLC

1. Turn the ignition off.
2. Measure the resistance between the (K23) APP Sensor No. 1 Signal circuit and the (F855) 5-volt Supply circuit in the APP Sensor harness connector.

   Is the below 10k Ohms?

   Yes

   - Repair the short between the (K23) APP Sensor No. 1 Signal circuit and the (F855) 5-volt Supply circuit.
   - Perform the POWERTRAIN VERIFICATION TEST. Refer to **POWERTRAIN VERIFICATION TEST - 6.7L** .

   No

   - Go To 5.

5. **(K23) APP SENSOR NO. 1 SIGNAL CIRCUIT SHORTED TO THE (F856) 5-VOLT SUPPLY CIRCUIT**

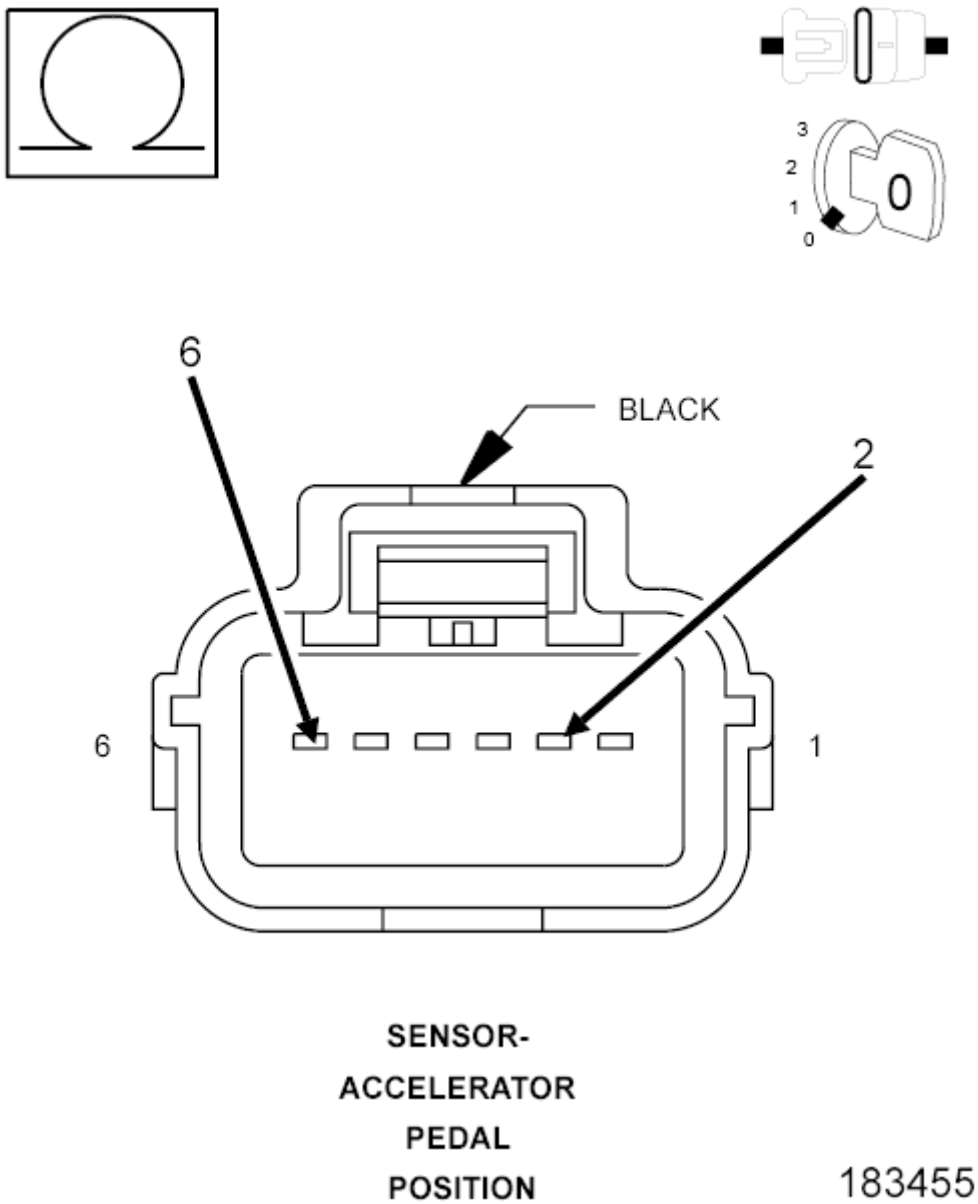

Fig. 156: Measuring Resistance Between (K23) APP Sensor No. 1 Signal Circuit And (F856) 5-Volt Supply Circuit In APP Sensor Harness Connector
Courtesy of CHRYSLER GROUP, LLC

1. Measure the resistance between the (K23) APP Sensor No. 1 Signal circuit and the (F856) 5-volt Supply circuit in the APP Sensor harness connector.

   Is the resistance below 10k Ohms?

   Yes

   - Repair the short between the (K23) APP Sensor No. 1 Signal circuit and the (F856) 5-volt Supply circuit.

- Perform the POWERTRAIN VERIFICATION TEST. Refer to **POWERTRAIN VERIFICATION TEST - 6.7L** .

No

- Go To 6.

6. **(K167) APP SENSOR NO. 1 RETURN CIRCUIT OPEN**
   1. Measure the resistance of the (K167) APP Sensor No. 1 Return circuit between the APP Sensor harness connector and the PCM C2 harness connector.

      Is the resistance below 10.0 Ohms?

      Yes

      - Go To 7.

      No

      - Repair the open or high resistance in the (K167) APP Sensor No. 1 Return circuit.
      - Perform the POWERTRAIN VERIFICATION TEST. Refer to **POWERTRAIN VERIFICATION TEST - 6.7L** .
7. **POWERTRAIN CONTROL MODULE (PCM)**

   NOTE: Before continuing, check the PCM harness connector terminals for corrosion, damage, or terminal push out. Repair as necessary.

   1. Using the schematics as a guide, inspect the wire harness and connectors. Pay particular attention to all Power and Ground circuits.

      Were there any problems found?

      Yes

      - Repair as necessary.
      - Perform the POWERTRAIN VERIFICATION TEST. Refer to **POWERTRAIN VERIFICATION TEST - 6.7L** .

      No

      - Replace and program the Powertrain Control Module in accordance with the service information. Refer to **PCM - REMOVAL** , also see **PCM/ECM / TCM PROGRAMMING** .
      - Perform the POWERTRAIN VERIFICATION TEST. Refer to **POWERTRAIN VERIFICATION TEST - 6.7L** .
8. **APP SENSOR NO. 1 SWEEP**

1. Ignition on, engine not running.
2. With a scan tool, monitor the Accelerator Pedal Position Sensor voltage.
3. Slowly press the Accelerator Pedal down.

   Does voltage start at approximately 0.45 of a volt and go above 4.6 volts with a smooth transition?

   Yes

   - Perform the INTERMITTENT CONDITION diagnostic procedure. Refer to **INTERMITTENT CONDITION - 6.7L** .

   No

   - Replace the APP Sensor Assembly in accordance with the Service Information. After installation is complete, use a scan tool and select the ETC RELEARN function to relearn the APPS values.
   - Perform the POWERTRAIN VERIFICATION TEST. Refer to **POWERTRAIN VERIFICATION TEST - 6.7L** .

P2127-ACCELERATOR PEDAL POSITION SENSOR 2 CIRCUIT LOW

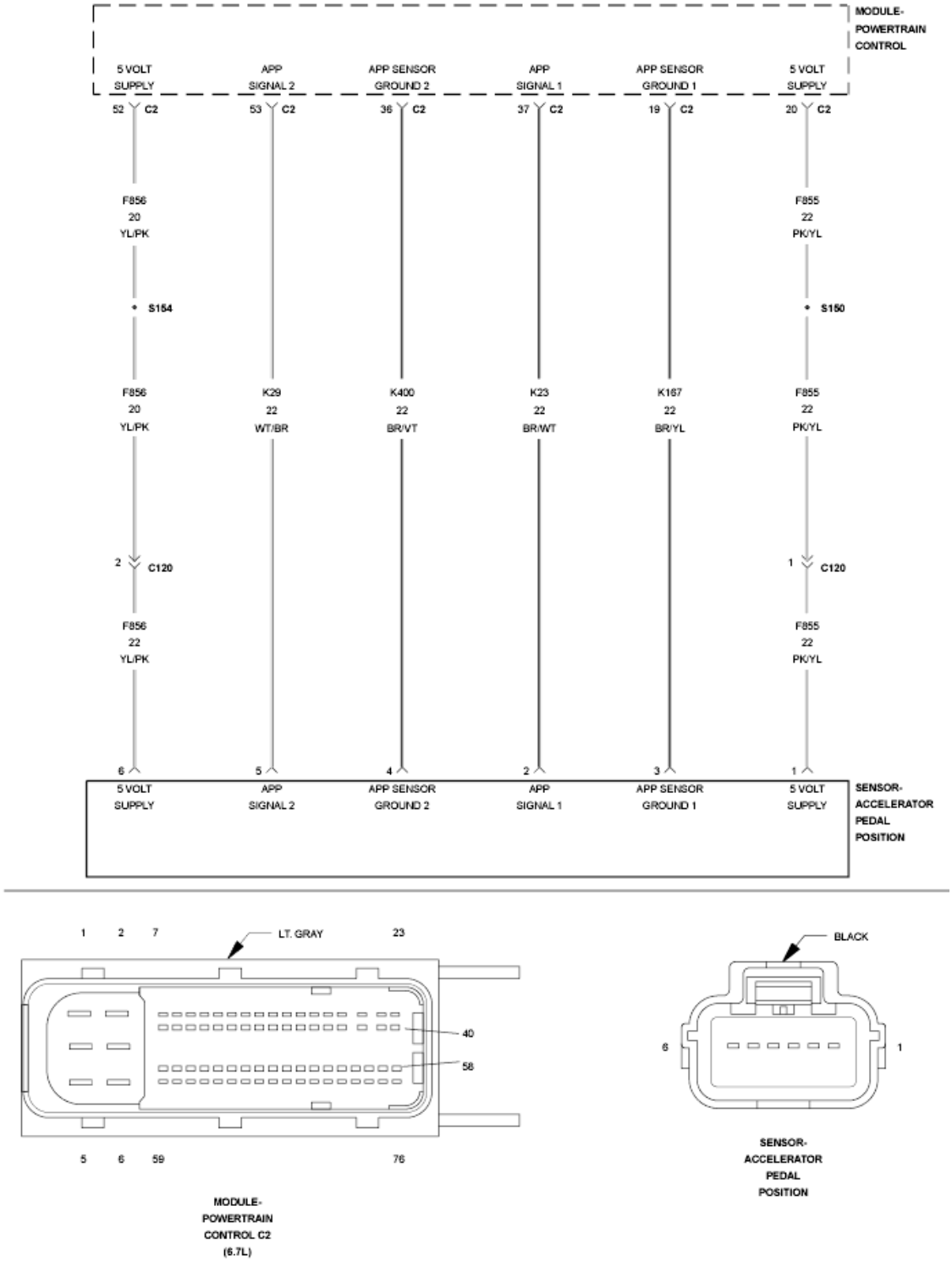

Fig. 157: Accelerator Pedal Position Sensor Circuit Schematic
Courtesy of CHRYSLER GROUP, LLC

For a complete wiring diagram, **refer to appropriate SYSTEM WIRING DIAGRAMS article** .

THEORY OF OPERATION

The throttle pedal produces two voltage signals proportional to the pedal movement. The primary signal varies between 0 and 5.0 Volts and the secondary signal varies between 0 and 2.5 Volts. The Powertrain Control Module uses the two signals to validate throttle pedal position to control engine fueling. The PCM illuminates the MIL lamp and ETC light solid immediately after the diagnostic runs and fails. Acceleration rate and Engine output are limited. The PCM will turn off the MIL lamp after the diagnostic runs and passes in four consecutive drive cycles.

WHEN MONITORED:

Any time the Powertrain Control Module is powered up.

SET CONDITION:

When the APP Sensor No. 2 voltage is below 0.05 Volts for one second.

POSSIBLE CAUSES

Possible Causes
(F856) 5-VOLT SUPPLY CIRCUIT OPEN/HIGH RESISTANCE
(F856) 5-VOLT SUPPLY CIRCUIT SHORTED TO GROUND
(K29) APP SENSOR 2 SIGNAL CIRCUIT OPEN/HIGH RESISTANCE
(K29) APP SENSOR 2 SIGNAL CIRCUIT SHORTED TO GROUND
(K29) APP SENSOR 2 SIGNAL CIRCUIT SHORTED TO THE (K167) APP SENSOR 1 RETURN CIRCUIT
(K29) APP SENSOR 2 SIGNAL CIRCUIT SHORTED TO THE (K400) APP SENSOR 2 RETURN CIRCUIT
APP SENSOR
POWERTRAIN CONTROL MODULE (PCM)

Always perform the Pre-Diagnostic Troubleshooting procedure before proceeding. Refer to PRE-DIAGNOSTIC TROUBLESHOOTING PROCEDURE - 6.7L .

DIAGNOSTIC TEST

1. **CHECK THE APP SENSOR BELOW VOLTAGE**

NOTE: **When this DTC is Active the engine speed, torque, and vehicle speed are limited to a Limp in mode.**

1. Ignition on, engine not running.
2. With a scan tool, read the APP Sensor No. 1 voltage.

NOTE: **Sensor No. 2 is pulled low by the PCM as part of its system testing. This test happens a couple of times a second. So you can expect to**

see voltages close to zero occasionally with a normal sensor.

Is the voltage consistently below 0.05 Volts?

Yes

- Go To 2.

No

- Go To 11.

2. **CHECK THE (F856) 5-VOLT SUPPLY CIRCUIT**

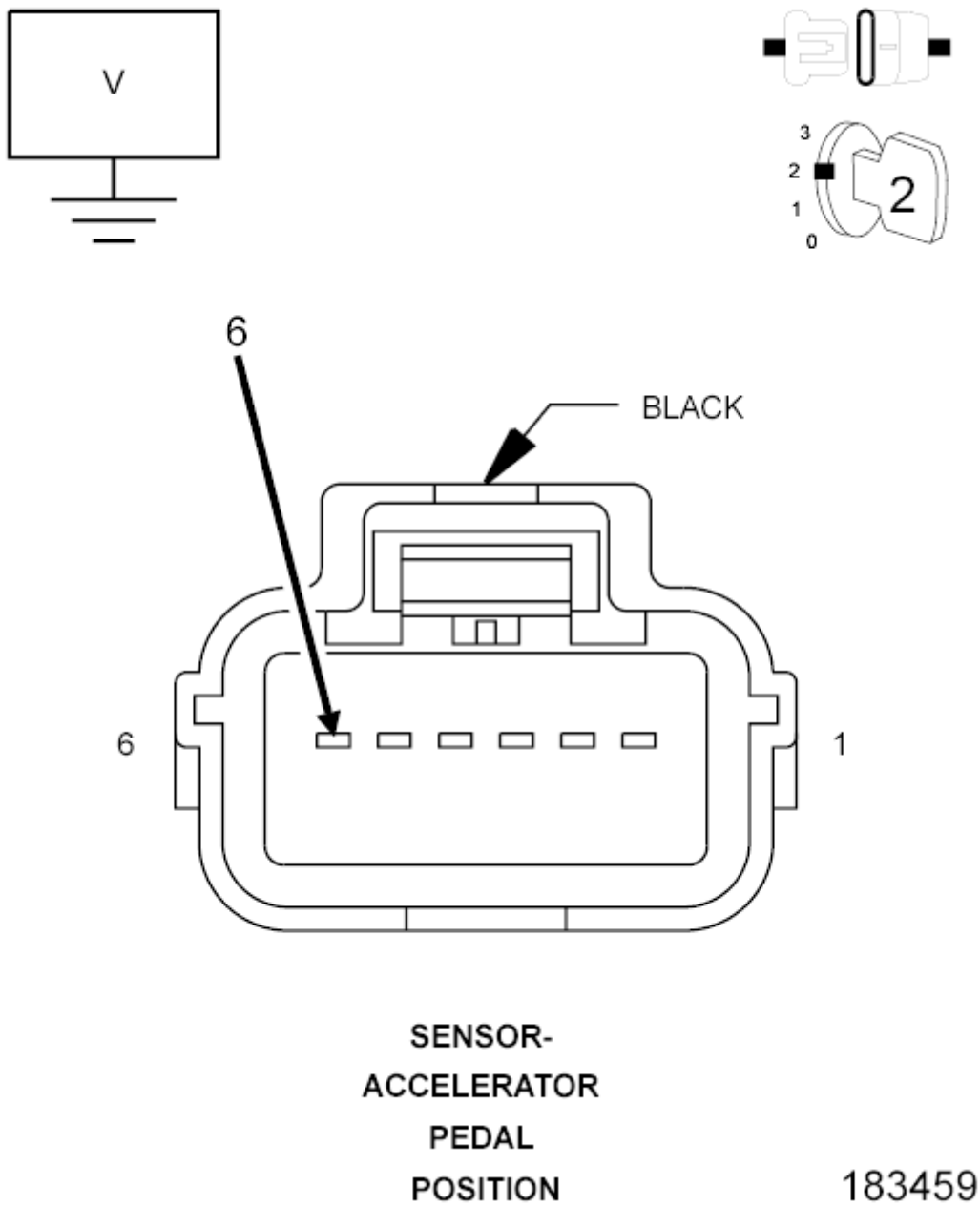

Fig. 158: Measuring Voltage On (F856) 5-Volt Supply Circuit In APP Sensor Harness Connector
Courtesy of CHRYSLER GROUP, LLC

1. Turn the ignition off.
2. Disconnect the APP Sensor harness connector.
3. Ignition on, engine not running.
4. Measure the voltage on the (F856) 5-Volt Supply circuit in the APP Sensor harness connector.

   Is the voltage between 4.65 and 5.36 Volts?

   Yes

- Go To 3.

No

- Go To 8.

3. **CHECK THE ACCELERATOR PEDAL POSITION SENSOR**

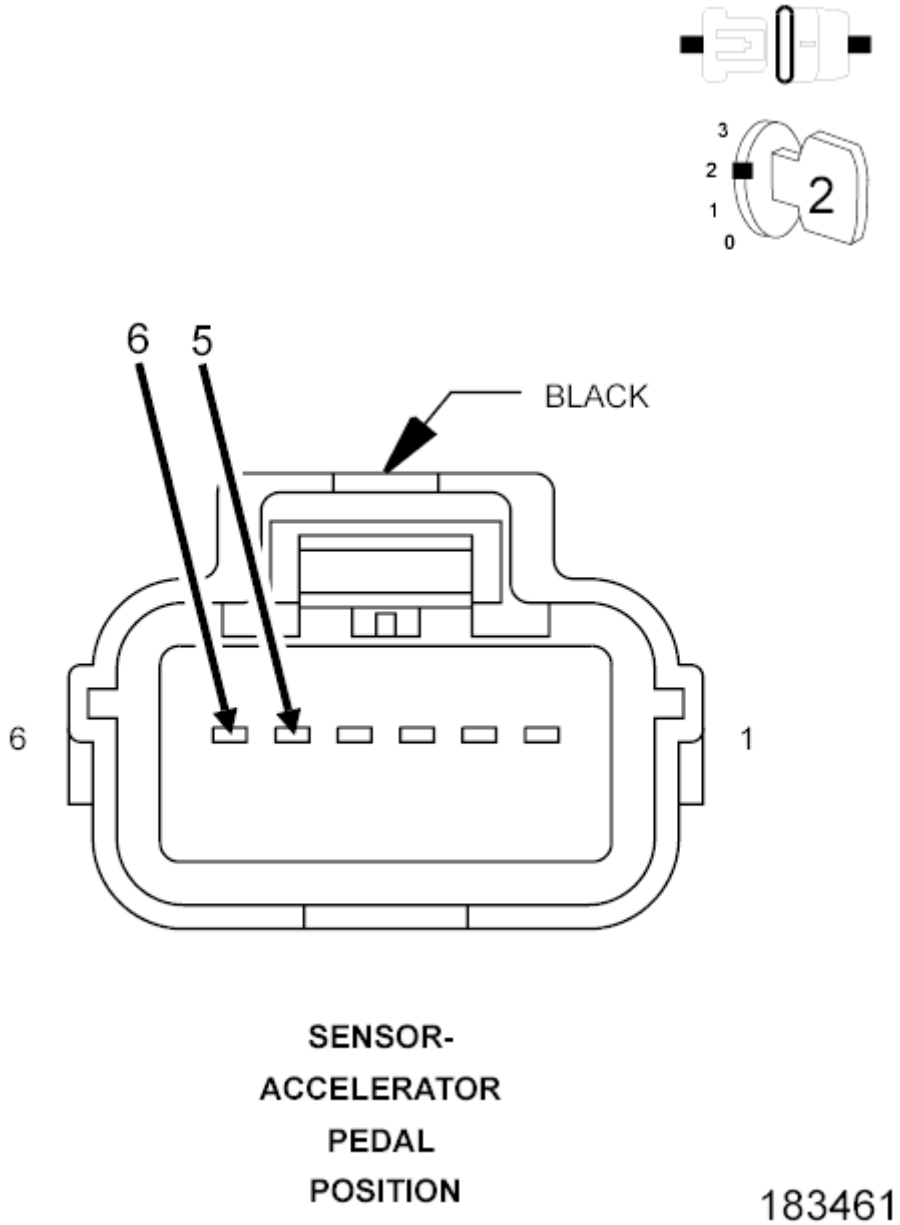

Fig. 159: Accelerator Pedal Position Sensor Harness Connector
Courtesy of CHRYSLER GROUP, LLC

1. Connect a jumper wire between the (F856) 5-Volt Supply circuit and the (K29) APP Sensor 2 Signal circuit in the Sensor harness connector.

2. With a scan tool, monitor the APP Sensor No. 2 voltage.

   Is the voltage between 4.65 and 5.36 Volts with the jumper wire installed?

   Yes

   - Replace the APP Sensor Assembly in accordance with the Service Information. After installation is complete, use a scan tool and select the ETC RELEARN function to relearn the APPS values.
   - Perform the POWERTRAIN VERIFICATION TEST. Refer to **POWERTRAIN VERIFICATION TEST - 6.7L** .

   No

   - Go To 4.

4. **CHECK THE (K29) APP SENSOR 2 SIGNAL CIRCUIT FOR AN OPEN/HIGH RESISTANCE**

   NOTE: Remove the jumper wire before continuing.

   1. Turn the ignition off.
   2. Disconnect the PCM C2 harness connector.
   3. Measure the resistance of the (K29) APP Sensor 2 Signal circuit from the APP Sensor harness connector to the PCM C2 harness connector.

      Is the resistance below 5.0 Ohms?

      Yes

      - Go To 5.

      No

      - Repair the (K29) APP Sensor 2 Signal circuit for an open or high resistance.
      - Perform the POWERTRAIN VERIFICATION TEST. Refer to **POWERTRAIN VERIFICATION TEST - 6.7L** .

5. **CHECK THE (K29) APP SENSOR 2 SIGNAL CIRCUIT FOR A SHORT TO GROUND**

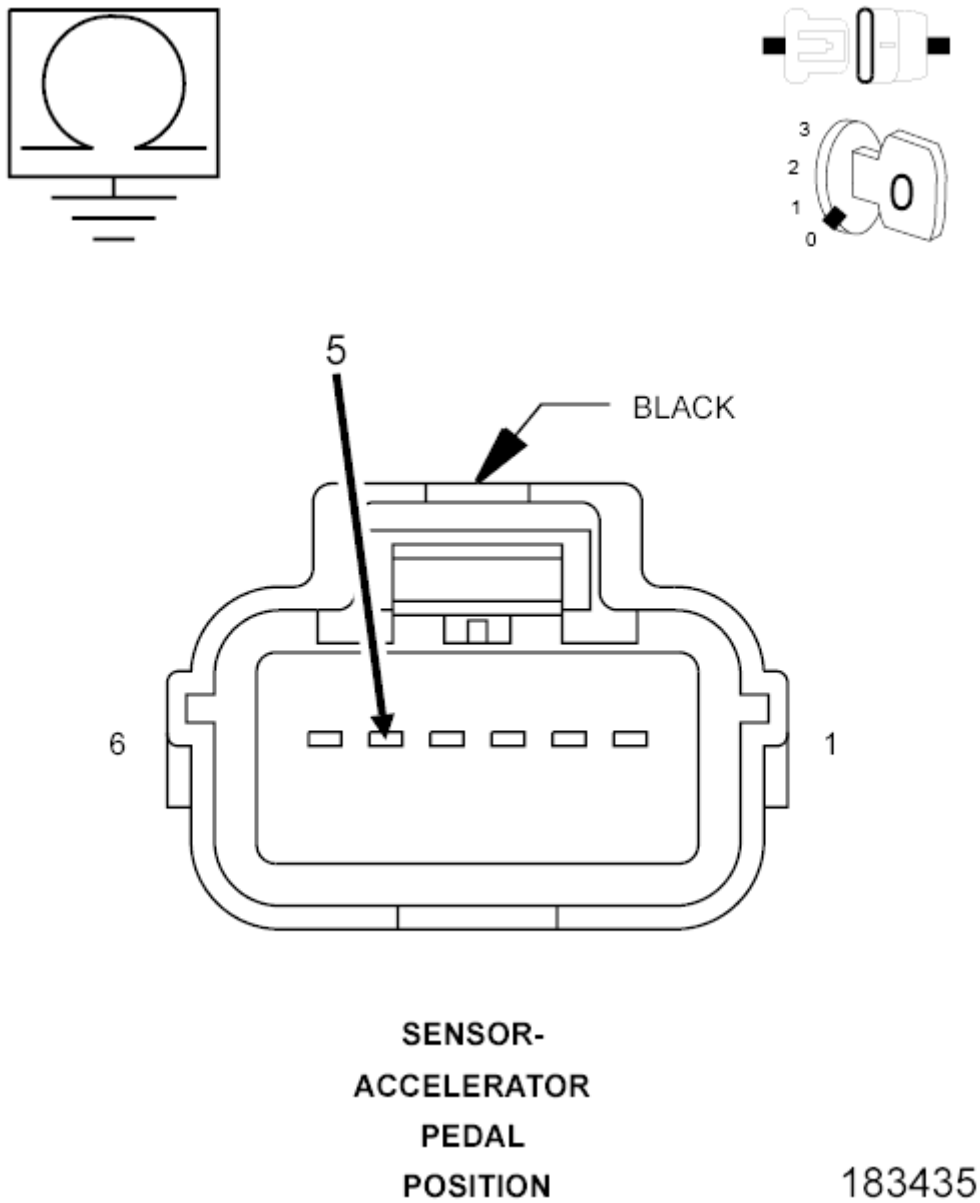

Fig. 160: Measuring Resistance Between Ground And (K29) APP Sensor No. 2 Signal Circuit In APP Sensor Harness Connector
Courtesy of CHRYSLER GROUP, LLC

1. Measure the resistance between ground and the (K29) APP Sensor 2 Signal circuit in the APP Sensor harness connector.

   Is the resistance below 10k Ohms?

   Yes

   - Repair the (K29) APP Sensor 2 Signal circuit for a short to ground.
   - Perform the POWERTRAIN VERIFICATION TEST. Refer to **POWERTRAIN**

VERIFICATION TEST - 6.7L .

No

- Go To 6.

6. **CHECK FOR THE (K29) APP SENSOR 2 SIGNAL CIRCUIT SHORTED TO THE (K400) APP SENSOR 2 RETURN CIRCUIT**

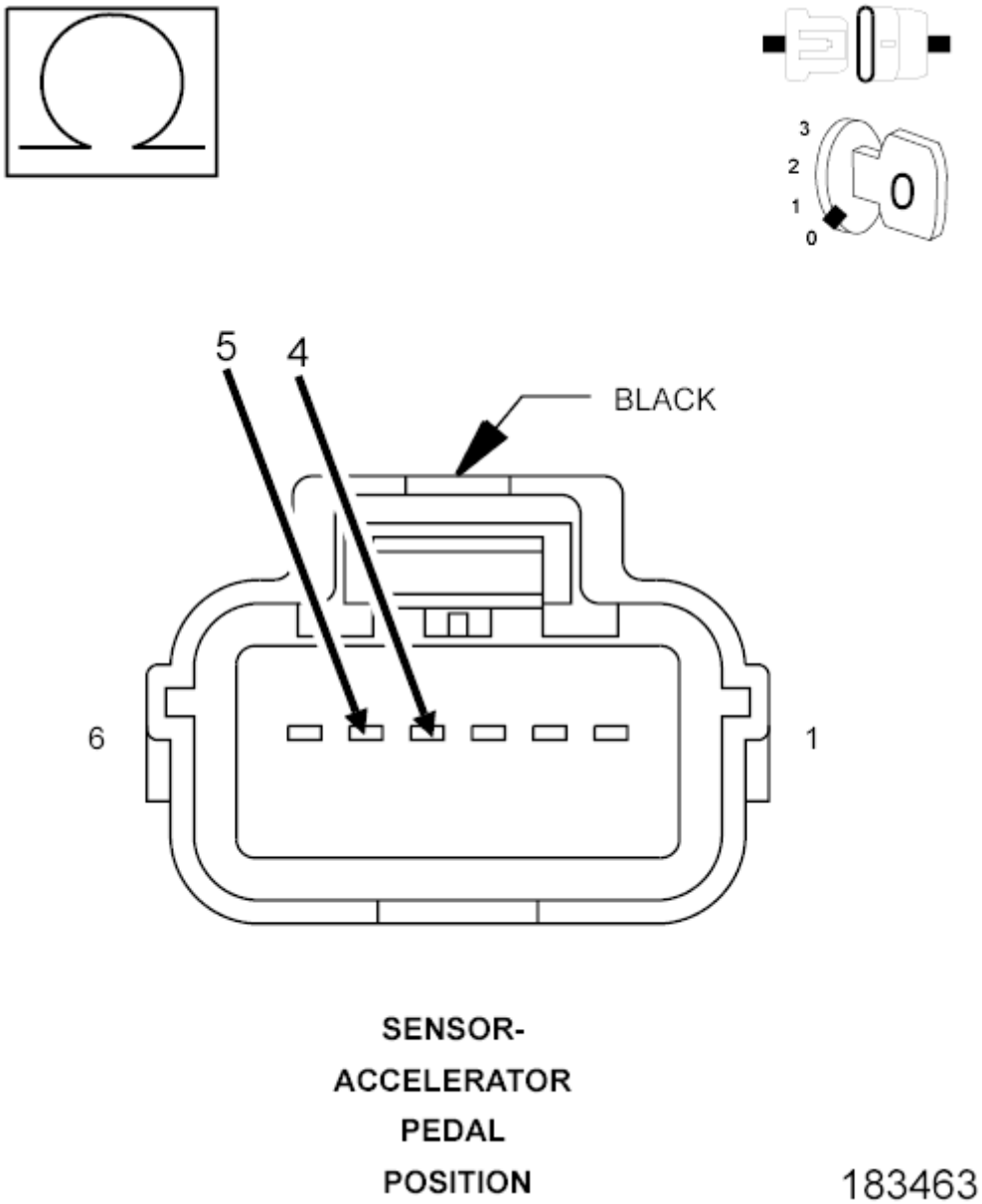

Fig. 161: Measuring Resistance Between (K29) APP Sensor No. 2 Signal Circuit And (K400) APP Sensor No. 2 Return Circuit In APP Sensor Harness Connector
Courtesy of CHRYSLER GROUP, LLC

1. Measure the resistance between the (K29) APP Sensor 2 Signal circuit and the (K400) Sensor 2

Return circuit in the APP Sensor harness connector.

Is the resistance below 10k Ohms?

Yes

- Repair the short between the (K400) APP Sensor 2 Return circuit and the (K29) APP Sensor 2 Signal circuit.
- Perform the POWERTRAIN VERIFICATION TEST. Refer to **POWERTRAIN VERIFICATION TEST - 6.7L** .

No

- Go To 7.

7. **CHECK FOR THE (K29) APP SENSOR 2 SIGNAL CIRCUIT SHORTED TO THE (K167) APP SENSOR 1 RETURN CIRCUIT**

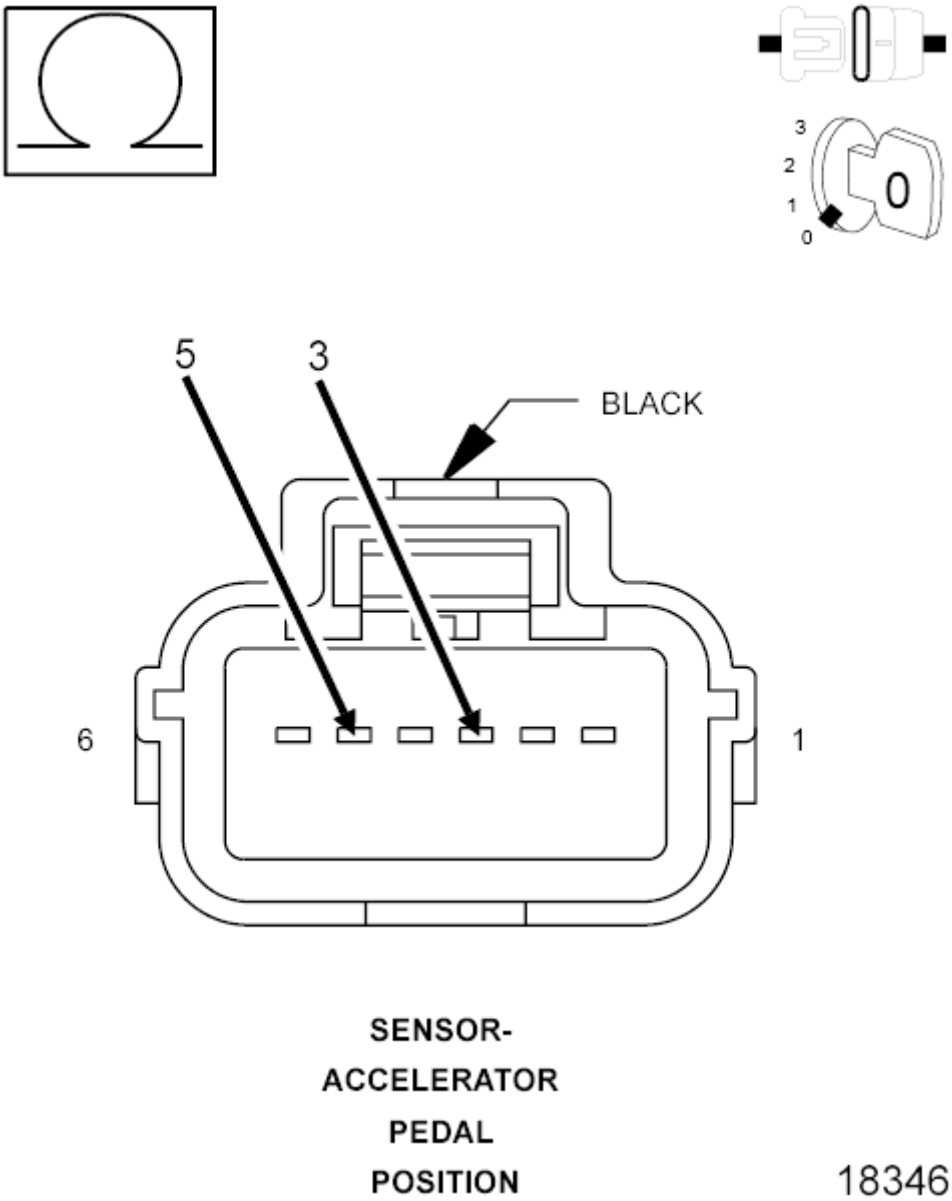

Fig. 162: Measuring Resistance Between (K29) APP Sensor No. 2 Signal Circuit And (K167) APP Sensor No. 1 Return Circuit In APP Sensor Harness Connector
Courtesy of CHRYSLER GROUP, LLC

1. Measure the resistance between the (K29) APP Sensor 2 Signal circuit and the (K167) Sensor 1 Return circuit in the APP Sensor harness connector.

   Is the resistance below 10k Ohms?

   Yes

   - Repair the short between the (K167) APP Sensor 1 Return circuit and the (K29) APP Sensor 2 Signal circuit.

- Perform the POWERTRAIN VERIFICATION TEST. Refer to **POWERTRAIN VERIFICATION TEST - 6.7L** .

No

- Go To 10.

8. **CHECK THE (F856) 5-VOLT SUPPLY CIRCUIT FOR AN OPEN/HIGH RESISTANCE**
   1. Turn the ignition off.
   2. Disconnect the C2 PCM harness connector.
   3. Measure the resistance of the (F856) 5-Volt Supply circuit between the APP Sensor harness connector to the C2 PCM harness connector.

   Is the resistance below 5.0 Ohms?

   Yes

   - Go To 9.

   No

   - Repair the (F856) 5-Volt Supply circuit for an open or high resistance.
   - Perform the POWERTRAIN VERIFICATION TEST. Refer to **POWERTRAIN VERIFICATION TEST - 6.7L** .
9. **CHECK THE (F856) 5-VOLT SUPPLY CIRCUIT FOR A SHORT TO GROUND**

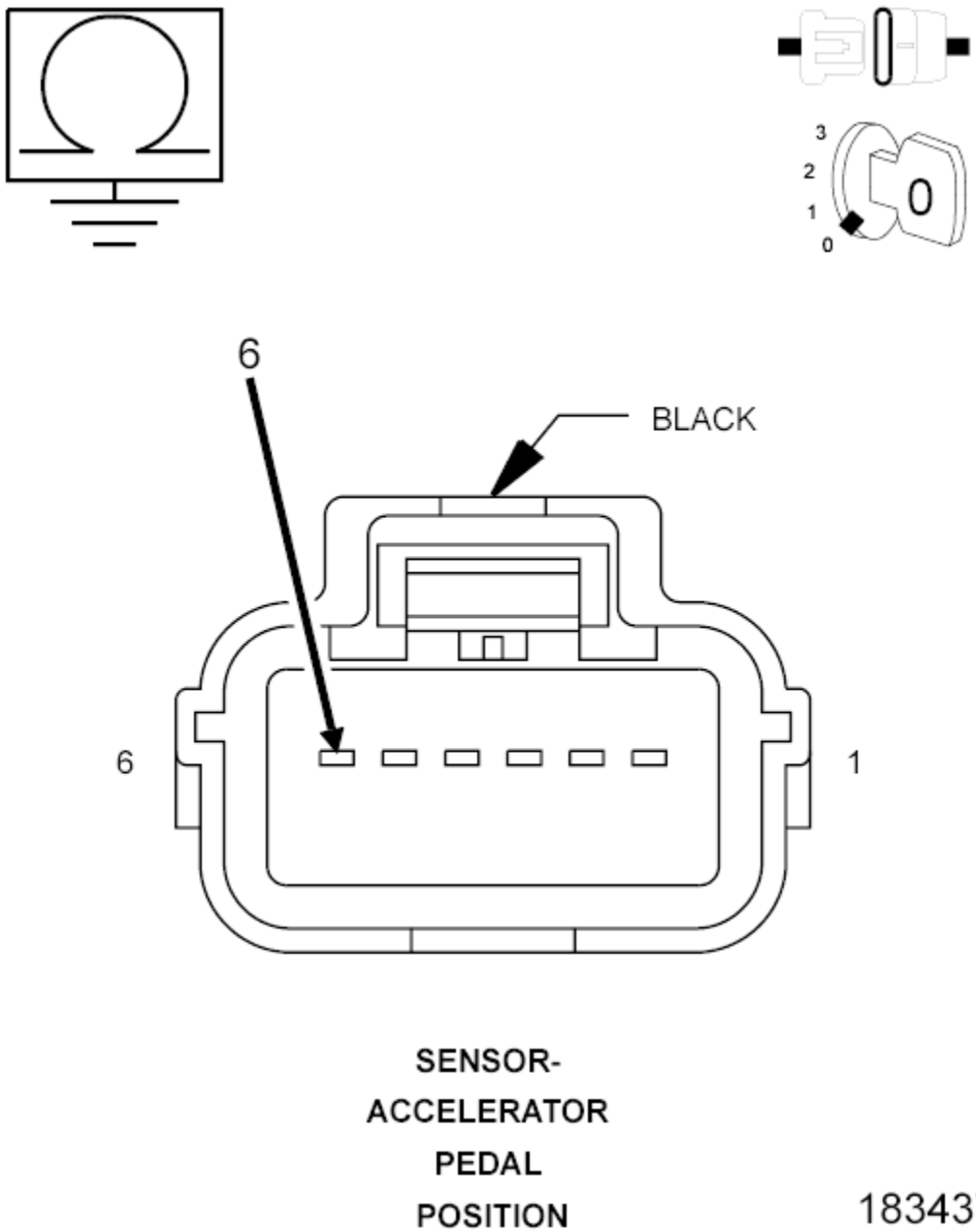

Fig. 163: Measuring Resistance Between Ground And (F856) 5-Volt Supply Circuit In APP Sensor Harness Connector
Courtesy of CHRYSLER GROUP, LLC

1. Measure the resistance between ground and the (F856) 5-Volt Supply circuit in the APP Sensor harness connector.

   Is the resistance below 10k Ohms?

   Yes

- Repair the (F856) 5-Volt Supply circuit for a short to ground.
- Perform the POWERTRAIN VERIFICATION TEST. Refer to **POWERTRAIN VERIFICATION TEST - 6.7L** .

No

- Go To 10.

10. **POWERTRAIN CONTROL MODULE**

NOTE: Before continuing, check the PCM harness connector terminals for corrosion, damage, or terminal push out. Repair as necessary.

1. Using the schematics as a guide, inspect the wire harness and connectors. Pay particular attention to all Power and Ground circuits.

   Were there any problems found?

   Yes

   - Repair as necessary.
   - Perform the POWERTRAIN VERIFICATION TEST. Refer to **POWERTRAIN VERIFICATION TEST - 6.7L** .

   No

   - Replace and program the Powertrain Control Module in accordance with the service information. Refer to **PCM - REMOVAL** , also see **PCM/ECM / TCM PROGRAMMING** .
   - Perform the POWERTRAIN VERIFICATION TEST. Refer to **POWERTRAIN VERIFICATION TEST - 6.7L** .

11. **APP SENSOR SWEEP**

1. Ignition on, engine not running.
2. With a scan tool, monitor the APP Sensor No. 2 voltage.
3. Slowly press the Accelerator pedal down.

   Does voltage start at approximately 0 Volts and go above 2.31 Volts with a smooth transition?

   Yes

   - Perform the INTERMITTENT CONDITION diagnostic procedure. Refer to **INTERMITTENT CONDITION - 6.7L** .

   No

   - Replace the APP Sensor Assembly in accordance with the Service Information. After

installation is complete, use a scan tool and select the ETC RELEARN function to relearn the APPS values.

- Perform the POWERTRAIN VERIFICATION TEST. Refer to **POWERTRAIN VERIFICATION TEST - 6.7L** .

P2128-ACCELERATOR PEDAL POSITION SENSOR 2 CIRCUIT HIGH

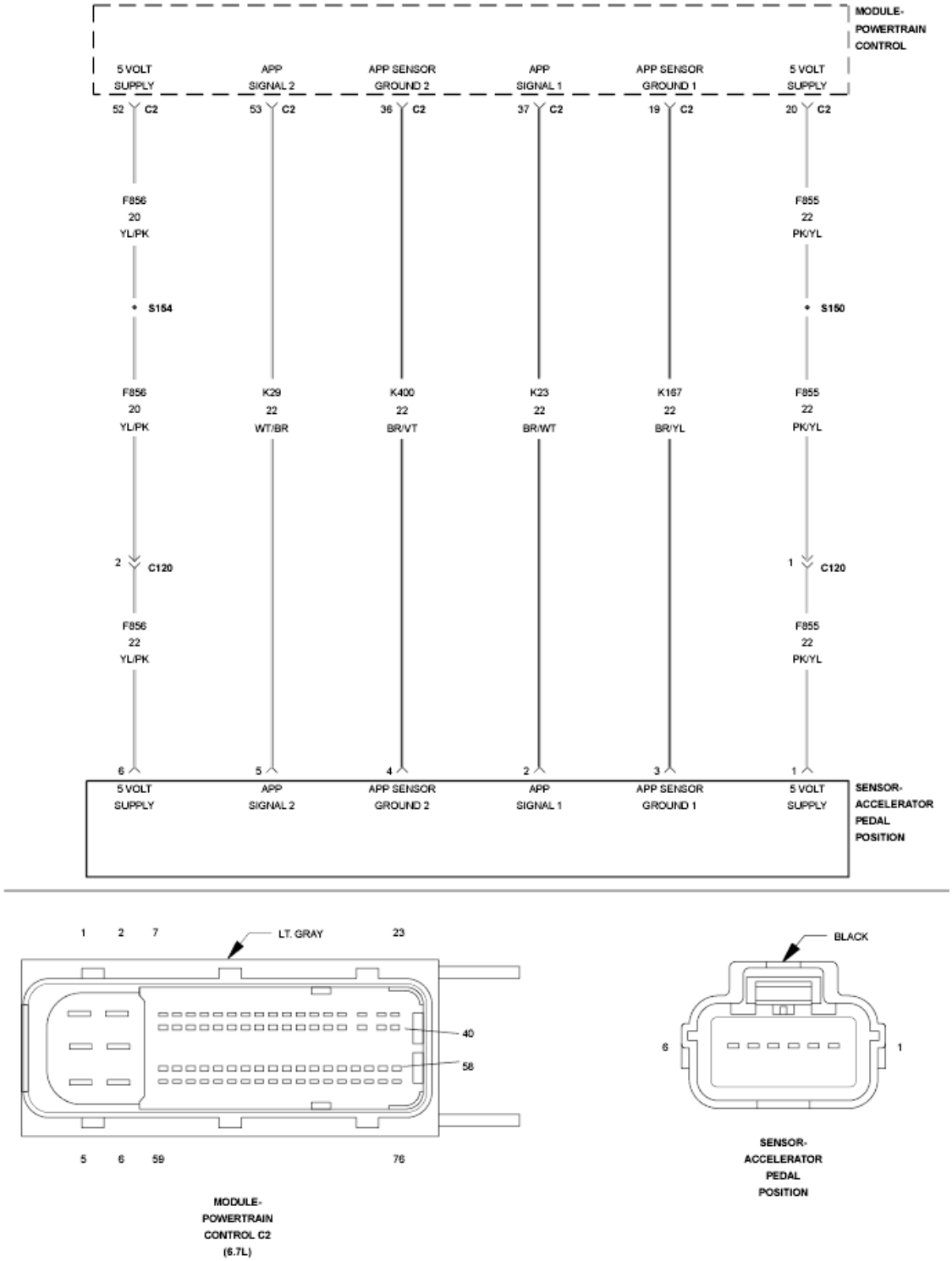

Fig. 164: Accelerator Pedal Position Sensor Circuit Schematic
Courtesy of CHRYSLER GROUP, LLC

For a complete wiring diagram, **refer to appropriate SYSTEM WIRING DIAGRAMS article** .

THEORY OF OPERATION

The throttle pedal produces two voltage signals proportional to the pedal movement. The primary signal varies between 0 and 5.0 Volts and the secondary signal varies between 0 and 2.5 Volts. The Powertrain Control Module (PCM) uses the two signals to validate throttle pedal position to control engine fueling. The PCM illuminates the MIL lamp and ETC light solid immediately after the diagnostic runs and fails. Acceleration rate and Engine output are limited. The PCM will turn off the MIL lamp after the diagnostic runs and passes in four consecutive drive cycles.

WHEN MONITORED:

Any time the Powertrain Control Module is powered up.

SET CONDITION:

When APP Sensor No. 2 voltage is above 2.5 Volts for one second.

POSSIBLE CAUSES

Possible Causes
(K29) APP SENSOR 2 SIGNAL CIRCUIT SHORTED TO BATTERY VOLTAGE
(K29) APP SENSOR 2 SIGNAL SHORTED TO THE (F856) 5-VOLT SUPPLY CIRCUIT
(K29) APP SENSOR 2 SIGNAL SHORTED TO THE (F855) 5-VOLT SUPPLY CIRCUIT
(K400) APP SENSOR 2 RETURN CIRCUIT OPEN
APP SENSOR
POWERTRAIN CONTROL MODULE (PCM)

Always perform the Pre-Diagnostic Troubleshooting procedure before proceeding. Refer to PRE-DIAGNOSTIC TROUBLESHOOTING PROCEDURE - 6.7L .

DIAGNOSTIC TEST

1. **APP SENSOR NO. 2 VOLTAGE ABOVE 2.5 VOLTS**

NOTE: When this DTC is Active the engine speed, torque, and vehicle speed are limited to a Limp in mode.

1. Ignition on, engine not running.
2. With a scan tool, read the APP Sensor No. 2 voltage.

NOTE: Diagnose any 5-Volt Supply DTCs before continuing.

Is the voltage above 2.5 Volts?

Yes

- Go To 2.

No

- Go To 8.

2. **CHECK THE ACCELERATOR PEDAL POSITION SENSOR**
    1. Turn the ignition off.
    2. Disconnect the APP Sensor harness connector.
    3. Ignition on, engine not running.
    4. With a scan tool, monitor the Accelerator Pedal Position Sensor voltage.

    Is the voltage above 0 Volts?

    Yes

    - Go To 3.

    No

    - Replace the APP Sensor Assembly in accordance with the Service Information. After installation is complete, use a scan tool and select the ETC RELEARN function to relearn the APPS values.
    - Perform the POWERTRAIN VERIFICATION TEST. Refer to **POWERTRAIN VERIFICATION TEST - 6.7L** .
3. **CHECK THE (K29) APP SENSOR 2 SIGNAL CIRCUIT FOR A SHORT TO BATTERY**

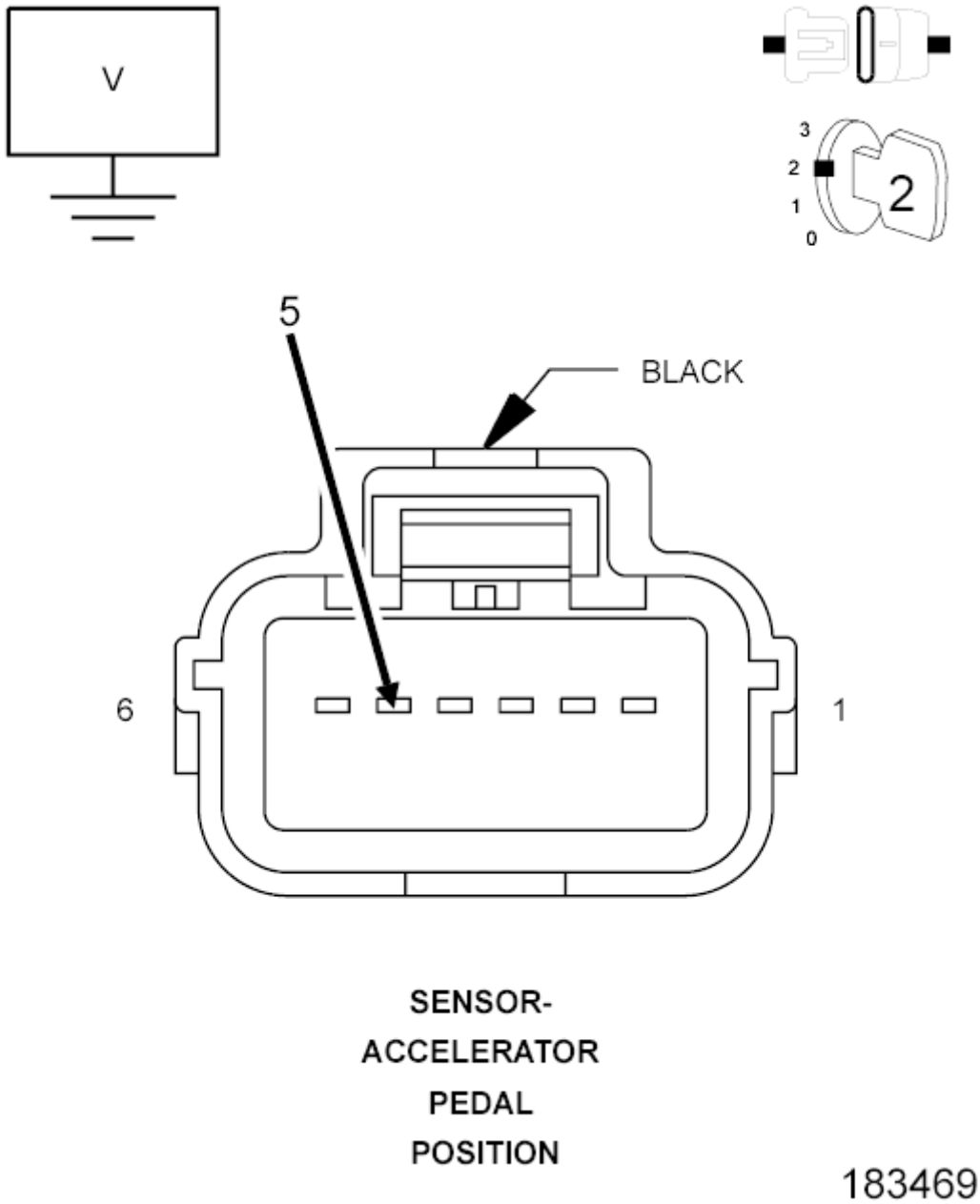

Fig. 165: Measuring Voltage On (K29) APP Sensor No. 2 Signal Circuit In APP Sensor Harness Connector
Courtesy of CHRYSLER GROUP, LLC

1. Turn the ignition off.
2. Disconnect the C2 PCM harness connector.
3. Ignition on, engine not running.
4. Measure the voltage on the (K29) APP Sensor 2 Signal circuit in the APP Sensor harness connector.

Is the voltage above 0 Volts?

Yes

- Repair the (K29) APP Sensor 2 Signal circuit for a short to voltage.
- Perform the POWERTRAIN VERIFICATION TEST. Refer to **POWERTRAIN VERIFICATION TEST - 6.7L** .

No

- Go To 4.

4. **CHECK FOR THE (K29) APP SENSOR 2 SIGNAL CIRCUIT SHORTED TO THE (F856) 5-VOLT SUPPLY CIRCUIT**

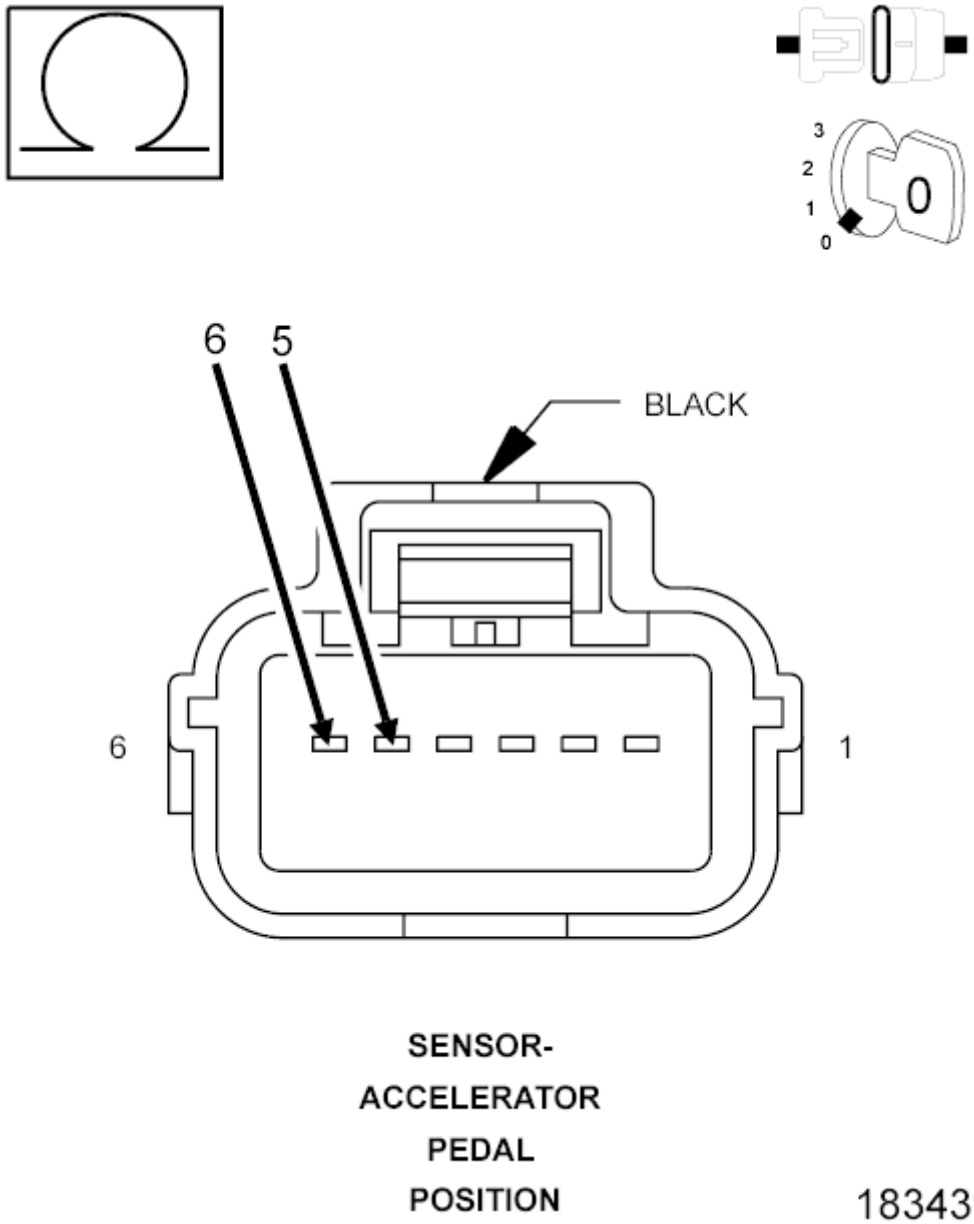

Fig. 166: Measuring Resistance Between (K29) APP Sensor No. 2 Signal Circuit And (F856) 5-Volt Supply Circuit In APP Sensor Harness Connector
Courtesy of CHRYSLER GROUP, LLC

1. Turn the ignition off.
2. Measure the resistance between the (K29) APP Sensor 2 Signal circuit and the (F856) 5-Volt Supply circuit in the APP Sensor harness connector.

   Is the resistance below 10k Ohms?

   Yes

- Repair the short between the (K29) APP Sensor 2 Signal circuit and the (F856) 5-Volt Supply circuit.
- Perform the POWERTRAIN VERIFICATION TEST. Refer to **POWERTRAIN VERIFICATION TEST - 6.7L** .

No

- Go To 5.

5. **CHECK FOR THE (K29) APP SENSOR 2 SIGNAL CIRCUIT SHORTED TO THE (F855) 5-VOLT SUPPLY CIRCUIT**

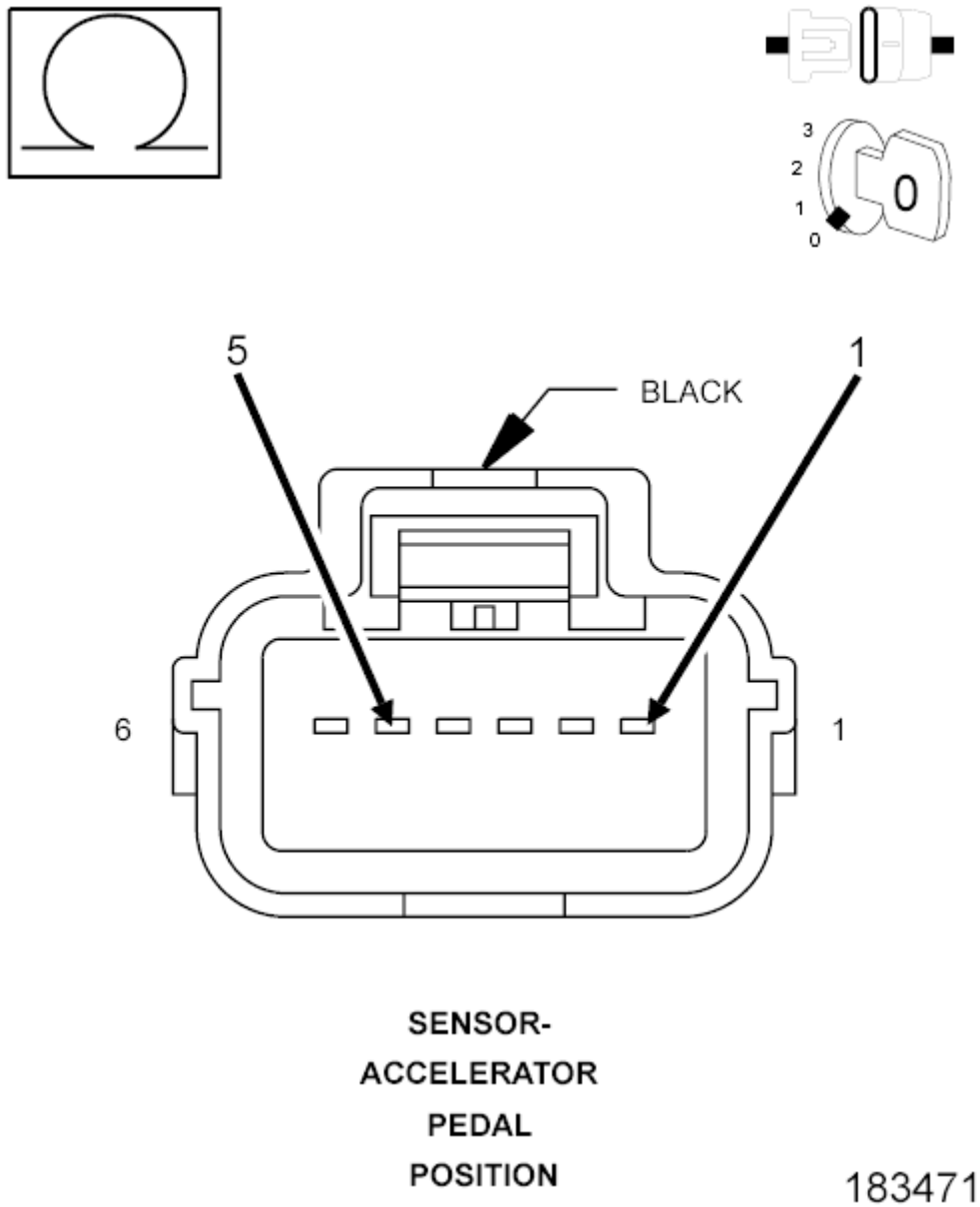

Fig. 167: Measuring Resistance Between (K29) APP Sensor No. 2 Signal Circuit And (F855) 5-Volt

Supply Circuit In APP Sensor Harness Connector
Courtesy of CHRYSLER GROUP, LLC

1. Measure the resistance between the (K29) APP Sensor 2 Signal circuit and the (F855) 5-Volt Supply circuit in the APP Sensor harness connector.

   Is the resistance below 10k Ohms?

   Yes

   - Repair the short between the (K29) APP Sensor 2 Signal circuit and the (F855) 5-Volt Supply circuit.
   - Perform the POWERTRAIN VERIFICATION TEST. Refer to **POWERTRAIN VERIFICATION TEST - 6.7L** .

   No

   - Go To 6.

6. **CHECK THE (K400) APP SENSOR 2 RETURN CIRCUIT FOR AN OPEN/HIGH RESISTANCE**
   1. Measure the resistance of the (K400) APP Sensor 2 Return circuit from the APP Sensor harness connector to the C2 PCM harness connector.

      Is the resistance below 5.0 Ohms?

      Yes

      - Go To 7.

      No

      - Repair the (K400) APP Sensor 2 Return circuit for an open or high resistance.
      - Perform the POWERTRAIN VERIFICATION TEST. Refer to **POWERTRAIN VERIFICATION TEST - 6.7L** .

7. **POWERTRAIN CONTROL MODULE**

   NOTE: Before continuing, check the PCM harness connector terminals for corrosion, damage, or terminal push out. Repair as necessary.

   1. Using the schematics as a guide, inspect the wire harness and connectors. Pay particular attention to all Power and Ground circuits.

      Were there any problems found?

      Yes

      - Repair as necessary.

- Perform the POWERTRAIN VERIFICATION TEST. Refer to **POWERTRAIN VERIFICATION TEST - 6.7L** .

No

- Replace and program the Powertrain Control Module in accordance with the service information. Refer to **PCM - REMOVAL** , also see **PCM/ECM / TCM PROGRAMMING** .
- Perform the POWERTRAIN VERIFICATION TEST. Refer to **POWERTRAIN VERIFICATION TEST - 6.7L** .

8. **APP SENSOR NO. 2 SWEEP**
   1. Ignition on, engine not running.
   2. With a scan tool, monitor the Accelerator Pedal Position Sensor voltage.
   3. Slowly press the Accelerator Pedal down.

   Does voltage start at approximately 0 Volts and go above 2.31 Volts with a smooth transition?

   Yes

   - Perform the INTERMITTENT CONDITION diagnostic procedure. Refer to **INTERMITTENT CONDITION - 6.7L** .

   No

   - Replace the APP Sensor Assembly in accordance with the Service Information. After installation is complete, use a scan tool and select the ETC RELEARN function to relearn the APPS values.
   - Perform the POWERTRAIN VERIFICATION TEST. Refer to **POWERTRAIN VERIFICATION TEST - 6.7L** .

P214A-SCR NOX CATALYST INLET TEMPERATURE TOO HIGH

For a complete wiring diagram, **refer to appropriate SYSTEM WIRING DIAGRAMS article** .

THEORY OF OPERATION

Selective Catalytic Reduction (SCR) is a technology that uses a urea based diesel exhaust fluid (DEF) and a catalytic converter to significantly reduce nitrous oxides (NOx) emissions. The system accomplishes this by injecting small quantities of diesel exhaust fluid (DEF) are injected into the exhaust system upstream of the catalyst, where it vaporizes and decomposes to form ammonia and carbon dioxide. The ammonia is the desired product which in conjunction to the SCR Catalyst, converts the NOx to harmless nitrogen and water. The Diesel Exhaust Fluid (DEF) Dosing Control Unit is used to control the operation and monitoring of the Diesel Exhaust Fluid system. The DEF Dosing Control Unit communicates with the Powertrain Control Module over the J1939 Data Link. The SCR system is equipped with two NOx Sensors and modules that are used to monitor the efficiency of the SCR Catalyst and diesel exhaust fluid system. The NOx Sensors and NOx Sensor Modules are calibrated to each other and must be replaced as an assembly. The two NOx Sensor and Module assemblies are

not interchangeable. The NOx Sensor Modules are smart devices that communicate with the Powertrain Control Module (PCM) over the J1939 Data Link. The NOx Sensor Modules perform their own internal diagnostics and report malfunctions back to the PCM.

WHEN MONITORED:

Continuously with the engine running and active regeneration of the Diesel Particulate Filter is not occurring.

SET CONDITION:

The Powertrain Control Module detects that Exhaust Gas Temperature (EGT) Sensor 1/3 is above 650°C (1202° F) for one minute.

POSSIBLE CAUSES

Possible Causes
EXHAUST GAS TEMPERATURE SENSOR 1/3 FAILED IN RANGE
ENGINE MISFIRE
EXCESSIVE FUEL OR OIL INTRODUCED INTO THE EXHAUST SYSTEM
DEFECTIVE DOC/DPF CATALYST

Always perform the Pre-Diagnostic Troubleshooting procedure before proceeding. Refer to PRE-DIAGNOSTIC TROUBLESHOOTING PROCEDURE - 6.7L .

DIAGNOSTIC TEST

1. **CHECK THE OPERATION OF EXHAUST TEMPERATURE SENSORS**

NOTE: **This fault will go inactive immediately after the SCR outlet temperature drops below the warning limit, and will likely be inactive when the vehicle is in the shop. For these reasons this troubleshooting tree must be used for both active and inactive fault codes.**

NOTE: **Repair any fuel, emissions, or DEF system component DTCs before continuing with this diagnostic procedure.**

1. Start and idle the engine for 10 minutes.
2. With the scan tool, read and compare the Exhaust Gas Temperature (EGT) Sensors.

   Do any of the EGT Sensors vary more than 43°F of the others?

   Yes

   - Go To 3.

   No

- Go To 2.

2. **CHECK THE EXHAUST TEMPERATURE SENSOR FOR A SHORT TO ANOTHER CIRCUIT**

NOTE: Perform this test on the EGT Sensor that was reading more than 43°F above or below the others.

1. Turn the ignition off.
2. Disconnect the Powertrain Control Module (PCM) C2 harness connector.
3. Measure the resistance between the EGT Sensor Signal circuit and all other circuits in the PCM C2 harness connector.

   Was the resistance above 10k Ohms between the EGT Sensor Signal circuit and all other circuits in the PCM C2 harness connector?

   Yes

   - Replace the Exhaust Gas Temperature Sensor in accordance with the service information. Refer to **SENSOR, EXHAUST TEMPERATURE, REMOVAL** .
   - Perform the POWERTRAIN VERIFICATION TEST. Refer to **POWERTRAIN VERIFICATION TEST - 6.7L** .

   No

   - Repair the short between the Exhaust Gas Temperature Sensor circuit and the circuit that measured below 10k Ohms.
   - Perform the POWERTRAIN VERIFICATION TEST. Refer to **POWERTRAIN VERIFICATION TEST - 6.7L** .

3. **CHECK FOR CYLINDER MISFIRE**
   1. Start the engine.
   2. With the scan tool, navigate to Systems Tests, and perform the Injector Kill system test.

      Were any cylinders found to be faulty or low?

      Yes

      - Perform the CHECKING ENGINE MISFIRE / RUNS ROUGH / PERFORMANCE TEST diagnostic procedure. Refer to **DIAGNOSIS AND TESTING, 6.7L** .
      - Perform the POWERTRAIN VERIFICATION TEST. Refer to **POWERTRAIN VERIFICATION TEST - 6.7L** .

      No

      - Go To 4.

4. **CHECK FOR EXCESSIVE ENGINE OIL BEING INTRODUCED INTO THE**

AFTERTREATMENT SYSTEM

1. Turn the ignition off.
2. Remove the turbocharger outlet and inspect for signs of oil, fuel or moisture being introduced into the aftertreatment system from the engine.

   Was engine oil, fuel or moisture found in the turbocharger exhaust outlet?

   Yes

   - Locate the cause of possible diesel fuel or engine oil being carried from the engine into the exhaust system. Inspect the SCR Catalyst for possible damage.
   - Perform the POWERTRAIN VERIFICATION TEST. Refer to **POWERTRAIN VERIFICATION TEST - 6.7L** .

   No

   - If DTC P1451 is present, perform a scan tool initiated regeneration of the aftertreatment system. If DTC P1451 is not present, replace the DOC/DPF assembly in accordance with the service information.
   - Perform the POWERTRAIN VERIFICATION TEST. Refer to **POWERTRAIN VERIFICATION TEST - 6.7L** .

P214B-SCR NOX CATALYST INLET TEMPERATURE TOO HIGH DURING PARTICULATE FILTER REGENERATION

For a complete wiring diagram, **refer to appropriate SYSTEM WIRING DIAGRAMS article** .

THEORY OF OPERATION

The Selective Catalytic Reduction (SCR) Catalyst is used in combination with the Diesel Exhaust Fluid system to reduce the amount of NOx gases produced during engine combustion. Excessive fuel or oil entering the exhaust system due to a failed engine component or Fuel Injector can cause the temperature to rise and will result in damage to the SCR Catalyst. The DEF Dosing Control Unit will turn on the MIL Lamp via the Powertrain Control Module (PCM) immediately after the monitor runs and fails, and diesel exhaust fluid injection is disabled.

WHEN MONITORED:

Continuously with the engine running and active regeneration of the DOC/DPF Catalyst is occurring.

SET CONDITION:

The Powertrain Control Module detects that Exhaust Gas Temperature (EGT) Sensor 1/3 is above 800°C (1472° F) for more than 20 seconds.

POSSIBLE CAUSES

Possible Causes
EXHAUST GAS TEMPERATURE SENSOR 1/3 FAILED IN RANGE
EXCESSIVE FUEL OR OIL INTRODUCED INTO THE EXHAUST SYSTEM
ENGINE MISFIRE
DEFECTIVE DOC/DPF CATALYST

Always perform the Pre-Diagnostic Troubleshooting procedure before proceeding. Refer to PRE-DIAGNOSTIC TROUBLESHOOTING PROCEDURE - 6.7L .

DIAGNOSTIC TEST

1. **CHECK THE OPERATION OF EXHAUST TEMPERATURE SENSORS**

NOTE: **This DTC will change to stored immediately after the exhaust temperature drops below the limit and will likely be stored when it enters the shop. For this reason, the diagnostic procedure should be performed for both active and inactive DTCs.**

NOTE: **Repair any fuel, emissions, or DEF system component DTCs before continuing with this diagnostic procedure.**

1. Start and idle the engine for 10 minutes.
2. With the scan tool, read and compare the Exhaust Gas Temperature (EGT) Sensors.

   Do any of the EGT Sensors vary more than 43°F of the others?

   Yes

   - Go To 2.

   No

   - Go To 3.

2. **CHECK THE EXHAUST TEMPERATURE SENSOR FOR A SHORT TO ANOTHER CIRCUIT**

NOTE: **Perform this test on the EGT Sensor that was reading more than 43°F above or below the others.**

1. Turn the ignition off.
2. Disconnect the Powertrain Control Module (PCM) C2 harness connector.
3. Measure the resistance between the EGT Sensor Signal circuit and all other circuits in the PCM C2 harness connector.

   Was the resistance above 10k Ohms between the EGT Sensor Signal circuit and all other circuits in

the PCM C2 harness connector?

Yes

- Replace the Exhaust Gas Temperature Sensor in accordance with the service information. Refer to **SENSOR, EXHAUST TEMPERATURE, REMOVAL** .
- Perform the POWERTRAIN VERIFICATION TEST. Refer to **POWERTRAIN VERIFICATION TEST - 6.7L** .

No

- Repair the short between the Exhaust Gas Temperature Sensor circuit and the circuit that measured below 10k Ohms.
- Perform the POWERTRAIN VERIFICATION TEST. Refer to **POWERTRAIN VERIFICATION TEST - 6.7L** .

3. **CHECK FOR CYLINDER MISFIRE**
   1. Start the engine.
   2. With the scan tool, navigate to Systems Tests, and perform the Injector Kill system test.

   Were any cylinders found to be faulty or low?

   Yes

   - Perform the CHECKING ENGINE MISFIRE / RUNS ROUGH / PERFORMANCE TEST diagnostic procedure. Refer to **DIAGNOSIS AND TESTING, 6.7L** .
   - Perform the POWERTRAIN VERIFICATION TEST. Refer to **POWERTRAIN VERIFICATION TEST - 6.7L** .

   No

   - Go To 4.
4. **CHECK FOR EXCESSIVE ENGINE OIL BEING INTRODUCED INTO THE AFTERTREATMENT SYSTEM**
   1. Turn the ignition off.
   2. Remove the turbocharger outlet and inspect for signs of oil, fuel or moisture being introduced into the aftertreatment system from the engine.

   Was engine oil, fuel or moisture found in the turbocharger exhaust outlet?

   Yes

   - Locate the cause of possible diesel fuel or engine oil being carried from the engine into the exhaust system. Inspect the SCR Catalyst for possible damage.
   - Perform the POWERTRAIN VERIFICATION TEST. Refer to **POWERTRAIN VERIFICATION TEST - 6.7L** .

No

- Go To 5.

5. **CHECK THE DOC/DPF CATALYST FOR PLUGGING**
   1. Remove the DOC/DPF Catalyst and check the inlet side for signs of soot accumulation or face plugging.

      Does the DOC/DPF Catalyst show any evidence of face plugging or soot accumulation?

      Yes

      - If DTC P1451 is present, perform a scan tool initiated regeneration of the aftertreatment system.
      - Perform the POWERTRAIN VERIFICATION TEST. Refer to **POWERTRAIN VERIFICATION TEST - 6.7L** .

      No

      - If DTC P1451 is not present, replace the DOC/DPF assembly in accordance with the service information. Refer to **FILTER, DIESEL PARTICULATE, REMOVAL** .
      - Perform the POWERTRAIN VERIFICATION TEST. Refer to **POWERTRAIN VERIFICATION TEST - 6.7L** .

P214C-SCR NOX CATALYST OUTLET TEMPERATURE TOO HIGH

For a complete wiring diagram, **refer to appropriate SYSTEM WIRING DIAGRAMS article** .

THEORY OF OPERATION

The Selective Catalytic Reduction (SCR) Catalyst is used in combination with the Diesel Exhaust Fluid system to reduce the amount of NOx gases produced during engine combustion. Excessive fuel or oil entering the exhaust system due to a failed engine component or Fuel Injector can cause the temperature to rise and will result in damage to the SCR Catalyst.

WHEN MONITORED:

Continuously with the engine running.

SET CONDITION:

The Powertrain Control Module detects that Exhaust Gas Temperature (EGT) Sensor 1/4 is above 650°C (1202° F) for one minute.

POSSIBLE CAUSES

Possible Causes

DEGRADED, DILUTED OR INCORRECT DIESEL EXHAUST FLUID
EXHAUST GAS TEMPERATURE SENSOR 1/4 FAILED IN RANGE
EXCESSIVE FUEL OR OIL INTRODUCED INTO THE EXHAUST SYSTEM
ENGINE MISFIRE
DEFECTIVE DOC/DPF CATALYST

Always perform the Pre-Diagnostic Troubleshooting procedure before proceeding. Refer to PRE-DIAGNOSTIC TROUBLESHOOTING PROCEDURE - 6.7L .

DIAGNOSTIC TEST

1. **CHECK THE OPERATION OF EXHAUST TEMPERATURE SENSORS**

   NOTE: Repair any fuel, emissions, or DEF system component DTCs before continuing with this diagnostic procedure.

   1. Start and idle the engine for 10 minutes.
   2. With the scan tool, read and compare the Exhaust Gas Temperature (EGT) Sensors.

      Do any of the EGT Sensors vary more than 43°F of the others?

      Yes

      - Go To 3.

      No

      - Go To 2.

2. **CHECK THE EXHAUST TEMPERATURE SENSOR FOR A SHORT TO ANOTHER CIRCUIT**

   NOTE: Perform this test on the EGT Sensor that was reading more than 43°F above or below the others.

   1. Turn the ignition off.
   2. Disconnect the Powertrain Control Module (PCM) C2 harness connector.
   3. Measure the resistance between the EGT Sensor Signal circuit and all other circuits in the PCM C2 harness connector.

      Was the resistance above 10k Ohms between the EGT Sensor Signal circuit and all other circuits in the PCM C2 harness connector?

      Yes

      - Replace the Exhaust Gas Temperature Sensor in accordance with the service information. Refer to **SENSOR, EXHAUST TEMPERATURE, REMOVAL** .

- Perform the POWERTRAIN VERIFICATION TEST. Refer to **POWERTRAIN VERIFICATION TEST - 6.7L** .

No

- Repair the short between the Exhaust Gas Temperature Sensor circuit and the circuit that measured below 10k Ohms.
- Perform the POWERTRAIN VERIFICATION TEST. Refer to **POWERTRAIN VERIFICATION TEST - 6.7L** .

3. **CHECK THE DIESEL EXHAUST FLUID**
   1. Turn the ignition off.
   2. Collect a sample of diesel exhaust fluid from the system.
   3. Visually inspect the fluid for signs of contamination or debris.

   Test the quality of the fluid using litmus paper (supplied by parts) or by using the SPX DEF/UREA Refractometer 94-F-00K-108-456 or equivalent.

   NOTE: The diesel exhaust fluid should register approximately 9 ph with the litmus paper and 32.5 percent using a refractometer.

   Is the diesel exhaust fluid quality within specification and free of debris and contamination?

   Yes

   - Go To 4.

   No

   - Drain the diesel exhaust fluid from the tank and fill the system. If the fluid is contaminated, perform the cleaning procedure. Refer to **TANK, DIESEL EXHAUST FLUID, CLEANING** .
   - Perform the POWERTRAIN VERIFICATION TEST. Refer to **POWERTRAIN VERIFICATION TEST - 6.7L** .

4. **CHECK FOR CYLINDER MISFIRE**
   1. Start the engine.
   2. With the scan tool, navigate to Systems Tests, and perform the Injector Kill system test.

   Were any cylinders found to be faulty or low?

   Yes

   - Perform the CHECKING ENGINE MISFIRE / RUNS ROUGH / PERFORMANCE TEST diagnostic procedure. Refer to **DIAGNOSIS AND TESTING, 6.7L** .
   - Perform the POWERTRAIN

VERIFICATION TEST - 6.7L .

No

- Go To 5.

5. **CHECK FOR EXCESSIVE ENGINE OIL BEING INTRODUCED INTO THE AFTERTREATMENT SYSTEM**
   1. Turn the ignition off.
   2. Remove the turbocharger outlet and inspect for signs of oil, fuel or moisture being introduced into the aftertreatment system from the engine.

      Was engine oil, fuel or moisture found in the turbocharger exhaust outlet?

      Yes

      - Locate the cause of possible diesel fuel or engine oil being carried from the engine into the exhaust system. Inspect the SCR Catalyst for possible damage.
      - Perform the POWERTRAIN VERIFICATION TEST. Refer to **POWERTRAIN VERIFICATION TEST - 6.7L** .

      No

      - Go To 6.

6. **CHECK THE DOC/DPF CATALYST FOR PLUGGING**
   1. Remove the DOC/DPF Catalyst and check the inlet side for signs of soot accumulation or face plugging.

      Does the DOC/DPF Catalyst show any evidence of face plugging or soot accumulation?

      Yes

      - If DTC P1451 is present, perform a scan tool initiated regeneration of the aftertreatment system.
      - Perform the POWERTRAIN VERIFICATION TEST. Refer to **POWERTRAIN VERIFICATION TEST - 6.7L** .

      No

      - If DTC P1451 is not present, replace the DOC/DPF assembly in accordance with the service information. Refer to **FILTER, DIESEL PARTICULATE, REMOVAL** .
      - Perform the POWERTRAIN VERIFICATION TEST. Refer to **POWERTRAIN VERIFICATION TEST - 6.7L** .

P214D-SCR NOX CATALYST OUTLET TEMPERATURE TOO HIGH DURING PARTICULATE FILTER REGENERATION

For a complete wiring diagram, **refer to appropriate SYSTEM WIRING DIAGRAMS article** .

THEORY OF OPERATION

The Selective Catalytic Reduction (SCR) Catalyst is used in combination with the Diesel Exhaust Fluid system to reduce the amount of NOx gases produced during engine combustion. Excessive fuel or oil entering the exhaust system due to a failed engine component or Fuel Injector can cause the temperature to rise and will result in damage to the SCR Catalyst. The DEF Dosing Control Unit will turn on the MIL Lamp via the Powertrain Control Module (PCM) immediately after the monitor runs and fails, and diesel exhaust fluid injection is disabled. The DEF Dosing Control Unit will turn off the MIL Lamp via the PCM immediately after the monitor runs and passes.

WHEN MONITORED:

Continuously with the engine running and active regeneration of the Diesel Particulate Filter is occurring.

SET CONDITION:

The Powertrain Control Module detects that Exhaust Gas Temperature (EGT) Sensor 1/4 is above 800°C (1472° F) for more than 20 seconds.

POSSIBLE CAUSES

Possible Causes
DEGRADED, DILUTED OR INCORRECT DIESEL EXHAUST FLUID
EXHAUST GAS TEMPERATURE SENSOR 1/4 FAILED IN RANGE
EXCESSIVE FUEL OR OIL INTRODUCED INTO THE EXHAUST SYSTEM
ENGINE MISFIRE
DEFECTIVE DOC/DPF CATALYST

Always perform the Pre-Diagnostic Troubleshooting procedure before proceeding. Refer to PRE-DIAGNOSTIC TROUBLESHOOTING PROCEDURE - 6.7L .

DIAGNOSTIC TEST

NOTE: **This DTC will change to stored immediately after the exhaust temperature drops below the limit and will likely be stored when it enters the shop. For this reason, the diagnostic procedure should be performed for both active and inactive DTCs.**

NOTE: **If there are DTCs present for the Fuel Injectors or Exhaust Gas Temperature Sensors, perform the diagnostics for those DTCs before proceeding with this test procedure.**

1. **CHECK THE DIESEL EXHAUST FLUID**
    1. Turn the ignition off.

2. Collect a sample of diesel exhaust fluid from the system.
3. Visually inspect the fluid for signs of contamination or debris.

   Test the quality of the fluid using litmus paper (supplied by parts) or by using the SPX DEF/UREA Refractometer 94-F-00K-108-456 or equivalent.

   NOTE: The diesel exhaust fluid should register approximately 9 ph with the litmus paper and 32.5 percent using a refractometer.

   Is the diesel exhaust fluid quality within specification and free of debris and contamination?

   Yes

   - Go To 2.

   No

   - Drain the diesel exhaust fluid from the tank and fill the system. If the fluid is contaminated, perform the cleaning procedure. Refer to **TANK, DIESEL EXHAUST FLUID, CLEANING** .
   - Perform the POWERTRAIN VERIFICATION TEST. Refer to **POWERTRAIN VERIFICATION TEST - 6.7L** .

2. **CHECK THE OPERATION OF EXHAUST TEMPERATURE SENSORS**
   1. Start and idle the engine for 10 minutes.
   2. With the scan tool, read and compare the Exhaust Gas Temperature (EGT) Sensors.

      Do any of the EGT Sensors vary more than 43°F of the others?

      Yes

      - Go To 3.

      No

      - Go To 4.

3. **CHECK THE EXHAUST TEMPERATURE SENSOR FOR A SHORT TO ANOTHER CIRCUIT**

   NOTE: Perform this test on the EGT Sensor that was reading more than 43°F above or below the others.

   1. Turn the ignition off.
   2. Disconnect the Powertrain Control Module (PCM) C2 harness connector.
   3. Measure the resistance between the EGT Sensor Signal circuit and all other circuits in the PCM C2 harness connector.

Was the resistance above 10k Ohms between the EGT Sensor Signal circuit and all other circuits in the PCM C2 harness connector?

Yes

- Replace the Exhaust Gas Temperature Sensor in accordance with the service information. Refer to **SENSOR, EXHAUST TEMPERATURE, REMOVAL** .
- Perform the POWERTRAIN VERIFICATION TEST. Refer to **POWERTRAIN VERIFICATION TEST - 6.7L** .

No

- Repair the short between the Exhaust Gas Temperature Sensor circuit and the circuit that measured below 10k Ohms.
- Perform the POWERTRAIN VERIFICATION TEST. Refer to **POWERTRAIN VERIFICATION TEST - 6.7L** .

4. **CHECK FOR CYLINDER MISFIRE**
   1. Start the engine.
   2. With the scan tool, navigate to Systems Tests, and perform the Injector Kill system test.

   Were any cylinders found to be faulty or low?

   Yes

   - Perform the CHECKING ENGINE MISFIRE / RUNS ROUGH / PERFORMANCE TEST diagnostic procedure. Refer to **DIAGNOSIS AND TESTING, 6.7L** .
   - Perform the POWERTRAIN VERIFICATION TEST. Refer to **POWERTRAIN VERIFICATION TEST - 6.7L** .

   No

   - Go To 5.

5. **CHECK FOR EXCESSIVE ENGINE OIL BEING INTRODUCED INTO THE AFTERTREATMENT SYSTEM**
   1. Turn the ignition off.
   2. Remove the turbocharger outlet and inspect for signs of oil, fuel or moisture being introduced into the aftertreatment system from the engine.

   Was engine oil, fuel or moisture found in the turbocharger exhaust outlet?

   Yes

   - Locate the cause of possible diesel fuel or engine oil being carried from the engine into the exhaust system. Inspect the SCR Catalyst for possible damage.
   - Perform the POWERTRAIN VERIFICATION TEST. Refer to **POWERTRAIN**

VERIFICATION TEST - 6.7L .

No

- Go To 6.

6. **CHECK THE DOC/DPF CATALYST FOR PLUGGING**
   1. Remove the DOC/DPF Catalyst and check the inlet side for signs of soot accumulation or face plugging.

      Does the DOC/DPF Catalyst show any evidence of face plugging or soot accumulation?

      Yes

      - If DTC P1451 is present, perform a scan tool initiated regeneration of the aftertreatment system.
      - Perform the POWERTRAIN VERIFICATION TEST. Refer to **POWERTRAIN VERIFICATION TEST - 6.7L** .

      No

      - If DTC P1451 is not present, replace the DOC/DPF assembly in accordance with the service information. Refer to **FILTER, DIESEL PARTICULATE, REMOVAL** .
      - Perform the POWERTRAIN VERIFICATION TEST. Refer to **POWERTRAIN VERIFICATION TEST - 6.7L** .

P21C2-(DIESEL EXHAUST FLUID) REDUCTANT LINE HEATER RELAY CONTROL CIRCUIT OPEN

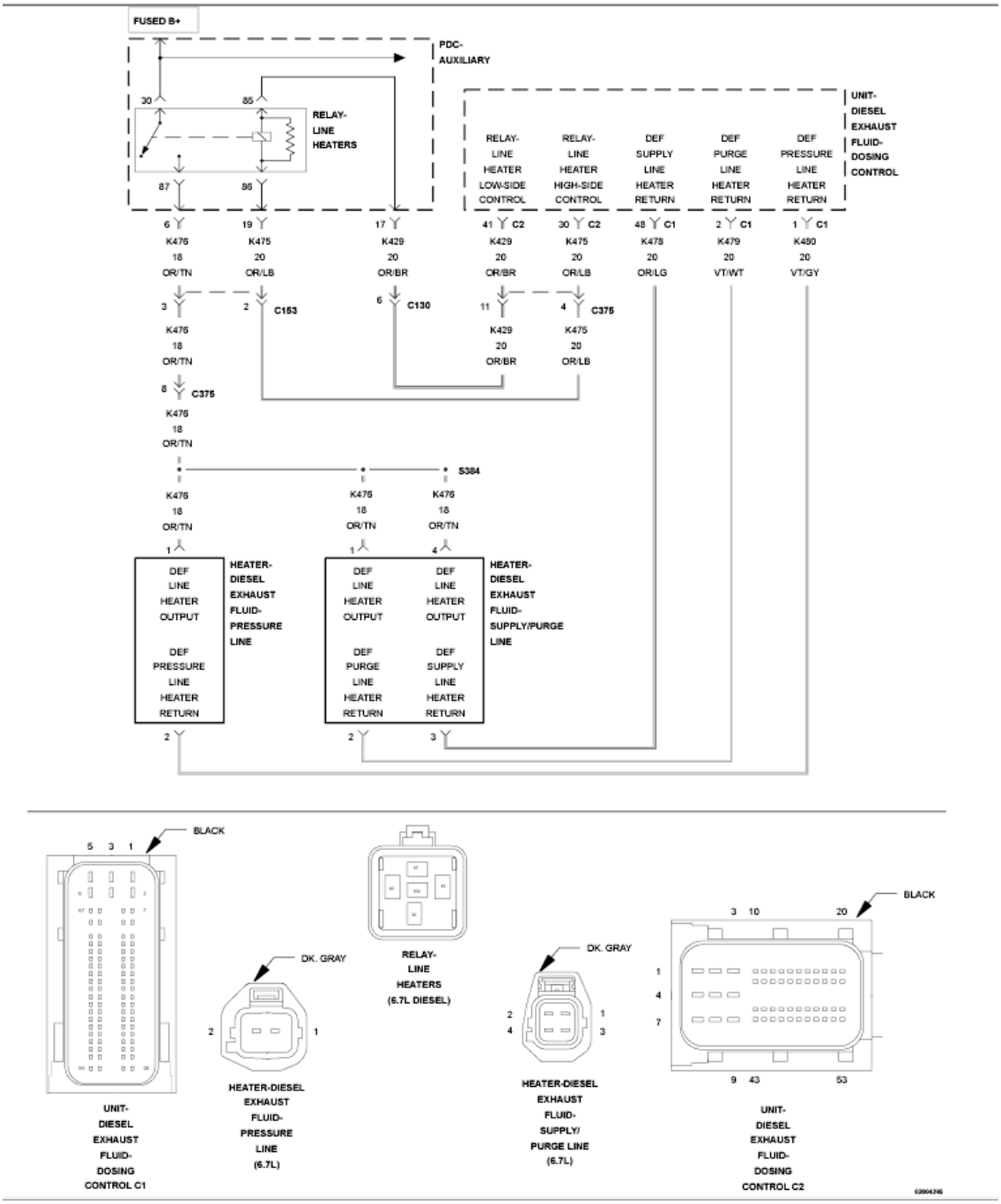

Fig. 168: Diesel Exhaust Fluid Reductant Line Heater Relay Control Circuit Wiring Diagram
Courtesy of CHRYSLER GROUP, LLC

For a complete wiring diagram, **refer to appropriate SYSTEM WIRING DIAGRAMS article** .

THEORY OF OPERATION

Each of the Diesel Exhaust Fluid (DEF) system hoses has a built in heater to warm the fluid in the lines. The three line heaters share a common power supply via the DEF Line Heater Relay which is controlled by the DEF Dosing Control Unit. The DEF Dosing Control Unit controls the heaters individually through the line heater

return circuits. The three line heater circuits are monitored at the return circuit. The DEF Dosing Unit Module will illuminate the MIL light via the Powertrain Control Module (PCM) immediately after the diagnostics runs and fails. The DEF Dosing Control Unit will turn off the MIL light via the PCM when the monitor runs and passes in three consecutive key cycles.

WHEN MONITORED:

Continuously with the ignition on.

SET CONDITION:

The DEF Dosing Control Unit detects that the DEF Line Heater Relay Control circuit is open.

POSSIBLE CAUSES

Possible Causes
(K475) DEF LINE HEATER RELAY SIGNAL CIRCUIT OPEN/HIGH RESISTANCE
(K429) DEF LINE HEATER RELAY CONTROL CIRCUIT OPEN/HIGH RESISTANCE
DEF LINE HEATER RELAY
DEF DOSING CONTROL UNIT

Always perform the Pre-Diagnostic Troubleshooting procedure before proceeding. Refer to PRE-DIAGNOSTIC TROUBLESHOOTING PROCEDURE - 6.7L .

NOTE: **The DEF Line Heater monitor runs when the DEF Line Heater Relay is commanded on. If the ambient temperature is too warm for the DEF Line Heaters to be turned on, the DTC will remain active and will not be able to be erased after repair is completed. Using the scan tool, navigate to Actuator Tests and actuate the Line Heater Relay test for the appropriate Line Heater to run the diagnostic and determine if the repair has been completed. If the repair is complete, the fault will move to stored and be able to be cleared with the scan tool.**

DIAGNOSTIC TEST

1. **ACTIVE DTC**
    1. Turn the ignition on.
    2. With the scan tool, View DTCs.

    Is the DTC active?

    Yes

    - Go To 2.

    No

- Perform the INTERMITTENT CONDITION diagnostic procedure. Refer to **INTERMITTENT CONDITION - 6.7L** .

2. **CHECK THE DEF LINE HEATER RELAY**
    1. With the scan tool, Erase DTCs.
    2. Turn the ignition off.
    3. Replace the DEF Line Heater Relay with a known good relay.
    4. Turn the ignition on.
    5. With the scan tool, navigate to Actuator Tests and actuate the Line Heater Relay.
    6. With the scan tool, View DTCs.

    Did the DTC return?

    Yes

    - Go To 2.

    No

    - Repair complete.
    - Perform the POWERTRAIN VERIFICATION TEST. Refer to **POWERTRAIN VERIFICATION TEST - 6.7L** .
3. **CHECK THE (K475) DEF LINE HEATER RELAY SIGNAL CIRCUIT FOR AN OPEN/HIGH RESISTANCE**

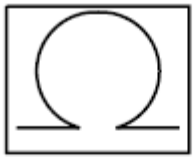

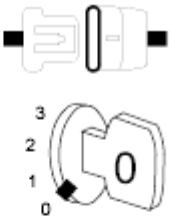

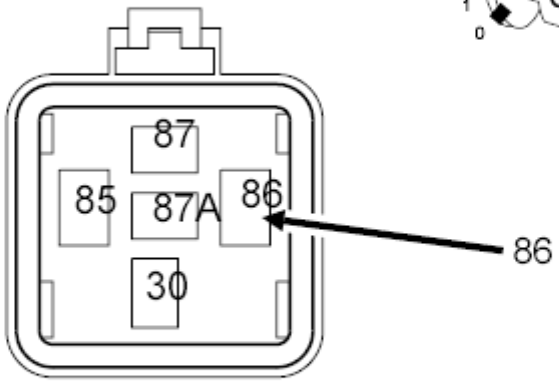

RELAY-
LINE
HEATERS
(6.7L DIESEL)

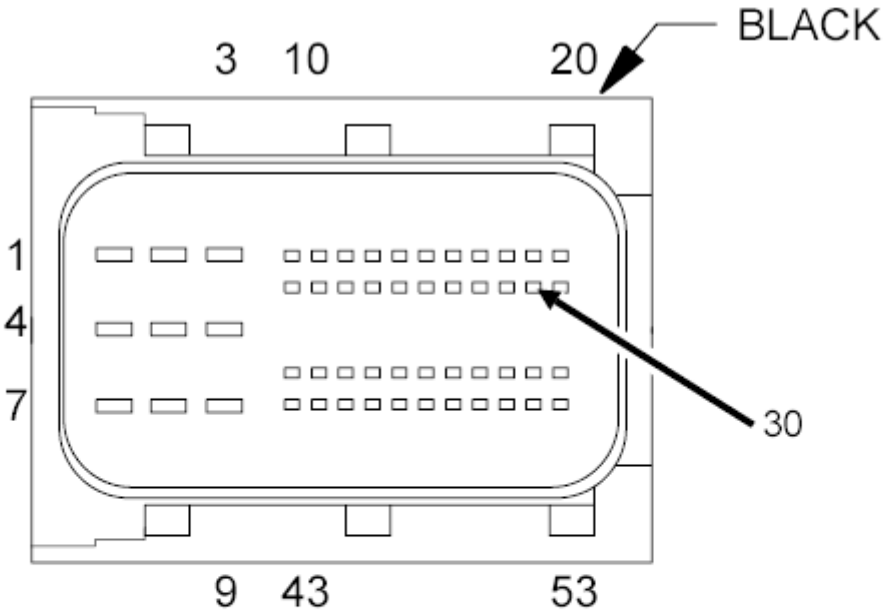

UNIT-
DIESEL
EXHAUST
FLUID-
DOSING
CONTROL C2

Fig. 169: Checking DEF Line Heater Relay Signal Circuit For An Open Or High Resistance
Courtesy of CHRYSLER GROUP, LLC

1. Stop actuation of the Line Heater Relay.
2. Turn the ignition off.
3. Remove the DEF Line Heater Relay.
4. Disconnect the DEF Dosing Control Unit C2 harness connector.
5. Measure the resistance of the (K475) DEF Line Heater Relay Signal circuit between the Line Heater Relay, terminal 86, and the DEF Dosing Control Unit C2 harness connector.

   Is the resistance below 5.0 Ohms?

   Yes

   - Go To 4.

   No

   - Repair the (K475) DEF Line Heater Relay Signal circuit for an open or high resistance.
   - Perform the POWERTRAIN VERIFICATION TEST. Refer to **POWERTRAIN VERIFICATION TEST - 6.7L** .

4. **CHECK THE (K429) DEF LINE HEATER RELAY CONTROL CIRCUIT FOR AN OPEN/HIGH RESISTANCE**

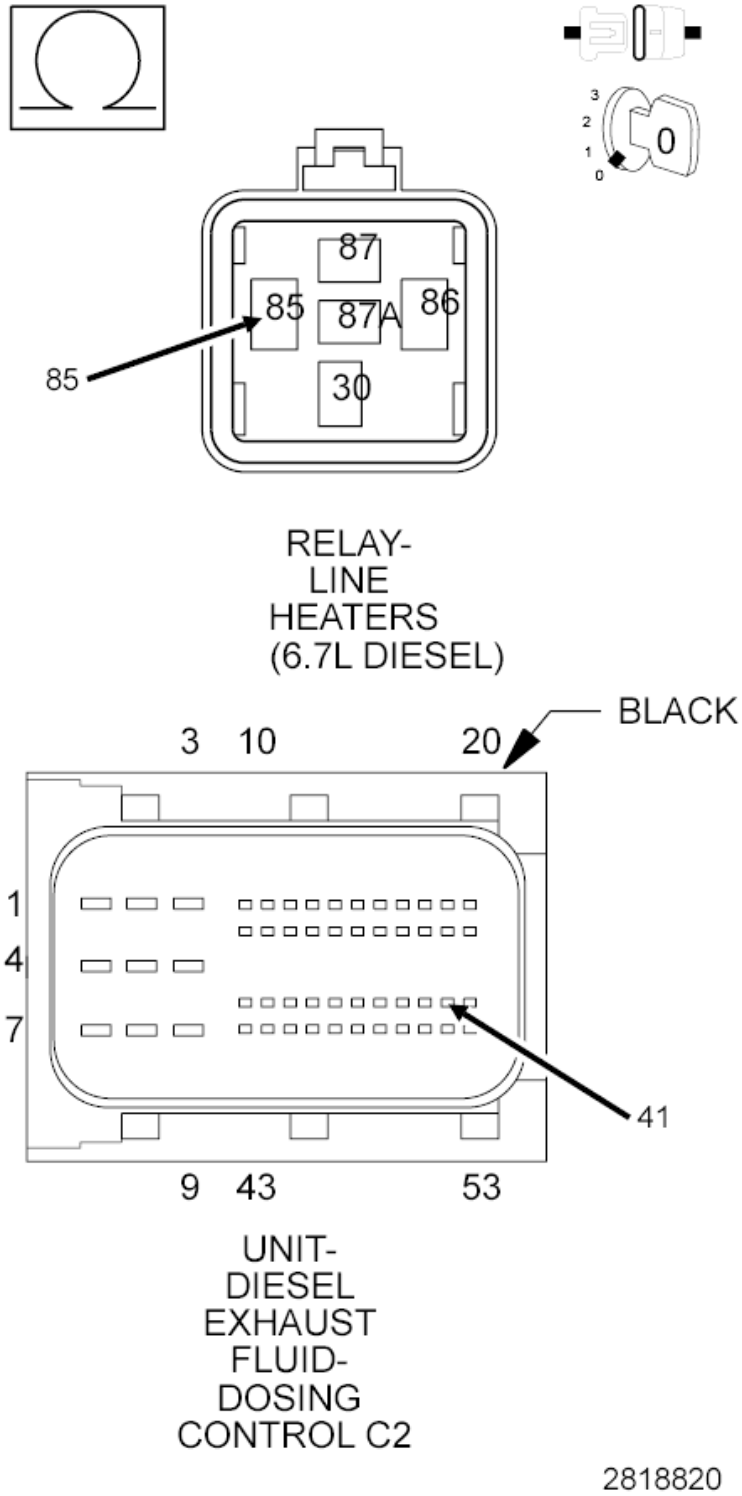

Fig. 170: Checking DEF Line Heater Relay Control Circuit For An Open Or High Resistance
Courtesy of CHRYSLER GROUP, LLC

1. Measure the resistance of the (K429) DEF Line Heater Relay Control circuit between the Line Heater Relay, terminal 85, and the DEF Dosing Control Unit C2 harness connector.

Is the resistance below 5.0 Ohms?

Yes

- Replace the DEF Dosing Control Unit in accordance with the service information. Refer to **UNIT, DIESEL EXHAUST FLUID DOSING CONTROL, REMOVAL** .
- Perform the POWERTRAIN VERIFICATION TEST. Refer to **POWERTRAIN VERIFICATION TEST - 6.7L** .

No

- Repair the (K429) DEF Line Heater Relay Control circuit for an open or high resistance.
- Perform the POWERTRAIN VERIFICATION TEST. Refer to **POWERTRAIN VERIFICATION TEST - 6.7L** .

P21C3-(DIESEL EXHAUST FLUID) REDUCTANT LINE HEATER RELAY CONTROL CIRCUIT LOW

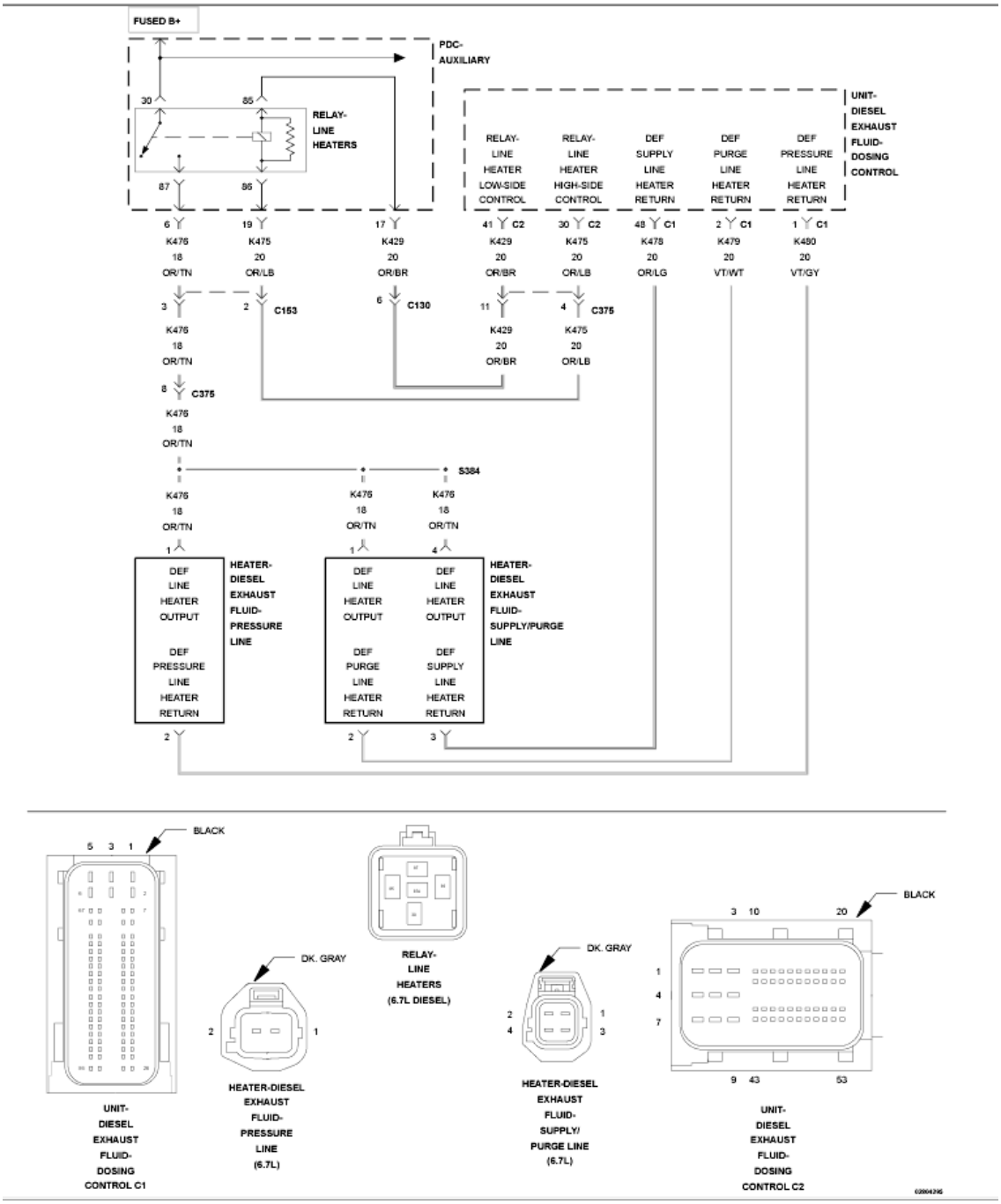

Fig. 171: Diesel Exhaust Fluid Reductant Line Heater Relay Control Circuit Wiring Diagram
Courtesy of CHRYSLER GROUP, LLC

For a complete wiring diagram, **refer to appropriate SYSTEM WIRING DIAGRAMS article** .

THEORY OF OPERATION

Each of the Diesel Exhaust Fluid (DEF) system hoses has a built in heater to warm the fluid in the lines. The three line heaters share a common power supply via the DEF Line Heater Relay which is controlled by the DEF Dosing Control Unit. The DEF Dosing Control Unit controls the heaters individually through the line heater

return circuits. The three line heater circuits are monitored at the return circuit. The DEF Dosing Control Unit will illuminate the MIL light via the Powertrain Control Module (PCM) immediately after the diagnostics runs and fails. The DEF Dosing Control Unit will turn off the MIL light via the PCM when the monitor runs and passes in three consecutive key cycles.

WHEN MONITORED:

The monitor runs when ignition is turned off. Fault will be active at the ignition on cycle.

SET CONDITION:

The DEF Dosing Control Unit detects that the DEF Line Heater Relay Control circuit voltage is below a calibrated value.

POSSIBLE CAUSES

Possible Causes
(K475) DEF LINE HEATER RELAY SIGNAL CIRCUIT SHORTED TO GROUND
(K429) DEF LINE HEATER RELAY CONTROL CIRCUIT SHORTED TO GROUND
DEF LINE HEATER RELAY
DEF DOSING CONTROL UNIT

Always perform the Pre-Diagnostic Troubleshooting procedure before proceeding. Refer to PRE-DIAGNOSTIC TROUBLESHOOTING PROCEDURE - 6.7L .

NOTE: **The DEF Line Heater monitor runs only when the DEF Line Heater Relay is commanded on. If the ambient temperature is too warm for the DEF Line Heaters to be turned on, the DTC will remain active and will not be able to be erased after repair is completed. Using the scan tool, navigate to Actuator Tests and actuate the Line Heater Relay test for the appropriate Line Heater to run the diagnostic and determine if the repair has been completed. If the repair is complete, the fault will move to stored and be able to be cleared with the scan tool.**

DIAGNOSTIC TEST

1. **ACTIVE DTC**
    1. Turn the ignition on.
    2. With the scan tool, View DTCs.

    Is the DTC active?

    Yes

    - Go To 2.

No

- Perform the INTERMITTENT CONDITION diagnostic procedure. Refer to **INTERMITTENT CONDITION - 6.7L** .

2. **CHECK THE DEF LINE HEATER RELAY**
   1. With the scan tool, Erase DTCs.
   2. Turn the ignition off.
   3. Replace the DEF Line Heater Relay with a known good relay.
   4. Turn the ignition on.
   5. With the scan tool, navigate to Actuator Tests and actuate the Line Heater Relay.
   6. With the scan tool, View DTCs.

   Did the DTC return?

   Yes

   - Go To 3.

   No

   - Repair complete.
   - Perform the POWERTRAIN VERIFICATION TEST. Refer to **POWERTRAIN VERIFICATION TEST - 6.7L** .

3. **CHECK THE (K475) DEF LINE HEATER RELAY SIGNAL CIRCUIT FOR A SHORT TO GROUND**

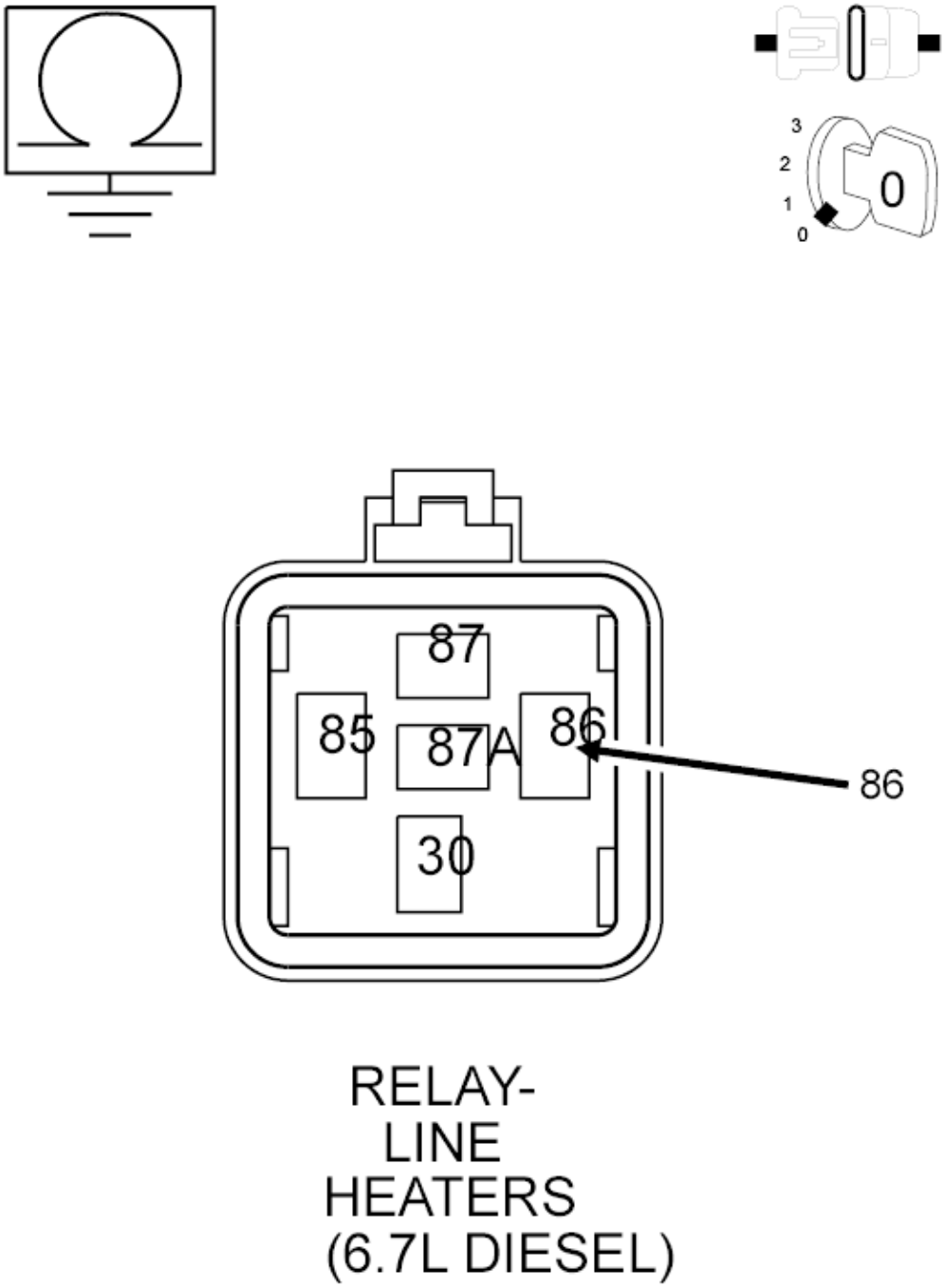

Fig. 172: Checking DEF Line Heater Relay Signal Circuit For A Short To Ground
Courtesy of CHRYSLER GROUP, LLC

1. Stop actuation of the Line Heater Relay.
2. Turn the ignition off.

3. Remove the DEF Line Heater Relay.
4. Disconnect the DEF Dosing Control Unit C2 harness connector.
5. Measure the resistance between ground and the (K475) DEF Line Heater Relay Signal circuit at the Line Heater Relay, terminal 86.

   Is the resistance above 10k Ohms?

   Yes

   - Go To 4.

   No

   - Repair the (K475) DEF Line Heater Relay Signal circuit for a short to ground.
   - Perform the POWERTRAIN VERIFICATION TEST. Refer to **POWERTRAIN VERIFICATION TEST - 6.7L** .

4. **CHECK THE (K429) DEF LINE HEATER RELAY CONTROL CIRCUIT FOR A SHORT TO GROUND**

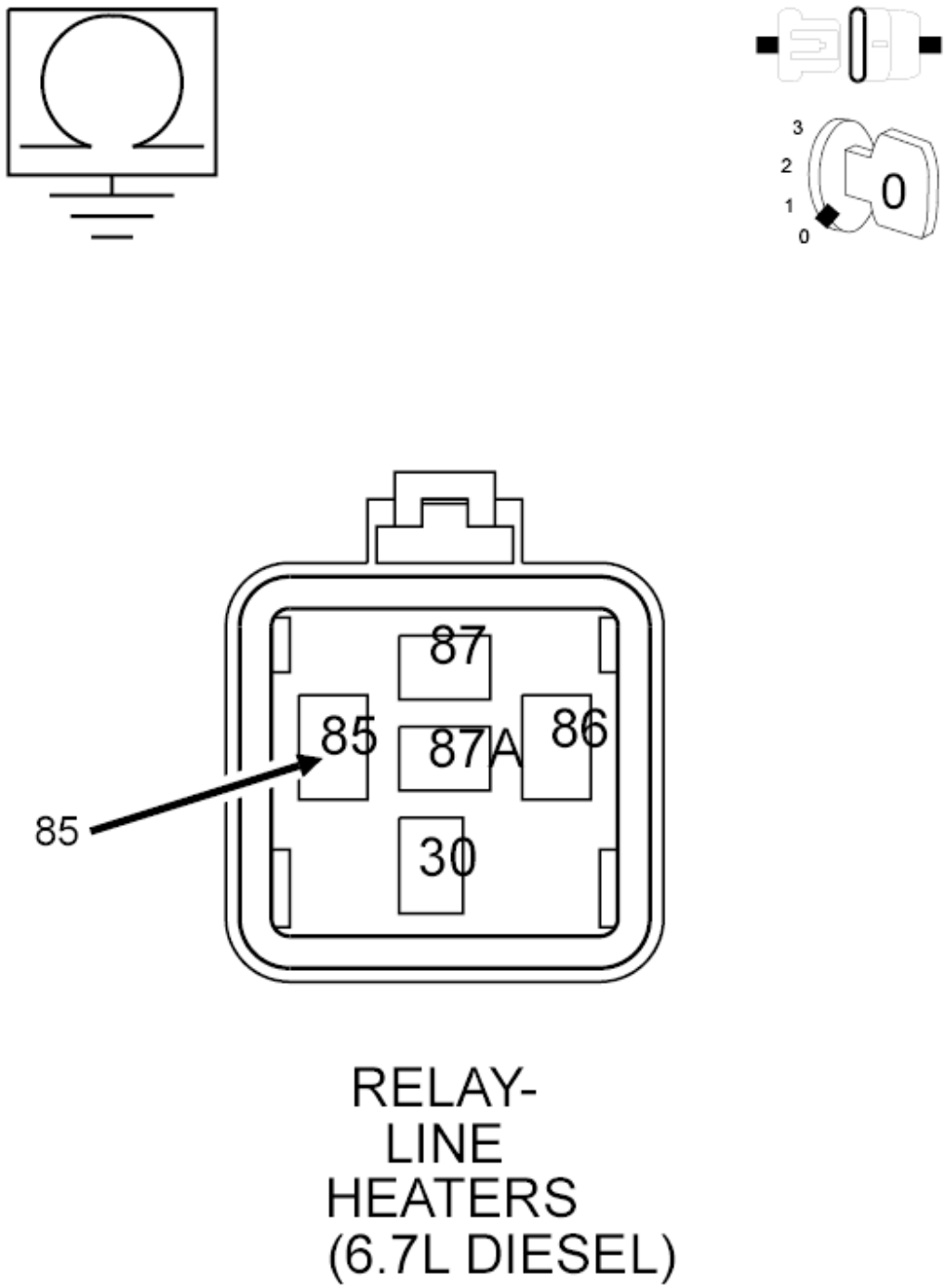

Fig. 173: Checking DEF Line Heater Relay Control Circuit For A Short To Ground
Courtesy of CHRYSLER GROUP, LLC

1. Measure the resistance between ground and the (K429) DEF Line Heater Relay Control circuit between the Line Heater Relay, terminal 85.

Is the resistance above 10k Ohms?

Yes

- Replace the DEF Dosing Control Unit in accordance with the service information. Refer to **UNIT, DIESEL EXHAUST FLUID DOSING CONTROL, REMOVAL** .
- Perform the POWERTRAIN VERIFICATION TEST. Refer to **POWERTRAIN VERIFICATION TEST - 6.7L** .

No

- Repair the (K429) DEF Line Heater Relay Control circuit for a short to ground.
- Perform the POWERTRAIN VERIFICATION TEST. Refer to **POWERTRAIN VERIFICATION TEST - 6.7L** .

Powertrain Control Module (PCM) - Electrical Diagnostics, 6.7L Diesel - 3500 Cab & Chassis, 4500 & 5500

DIAGNOSIS AND TESTING

P21C4-(DIESEL EXHAUST FLUID) REDUCTANT LINE HEATER RELAY CONTROL CIRCUIT HIGH

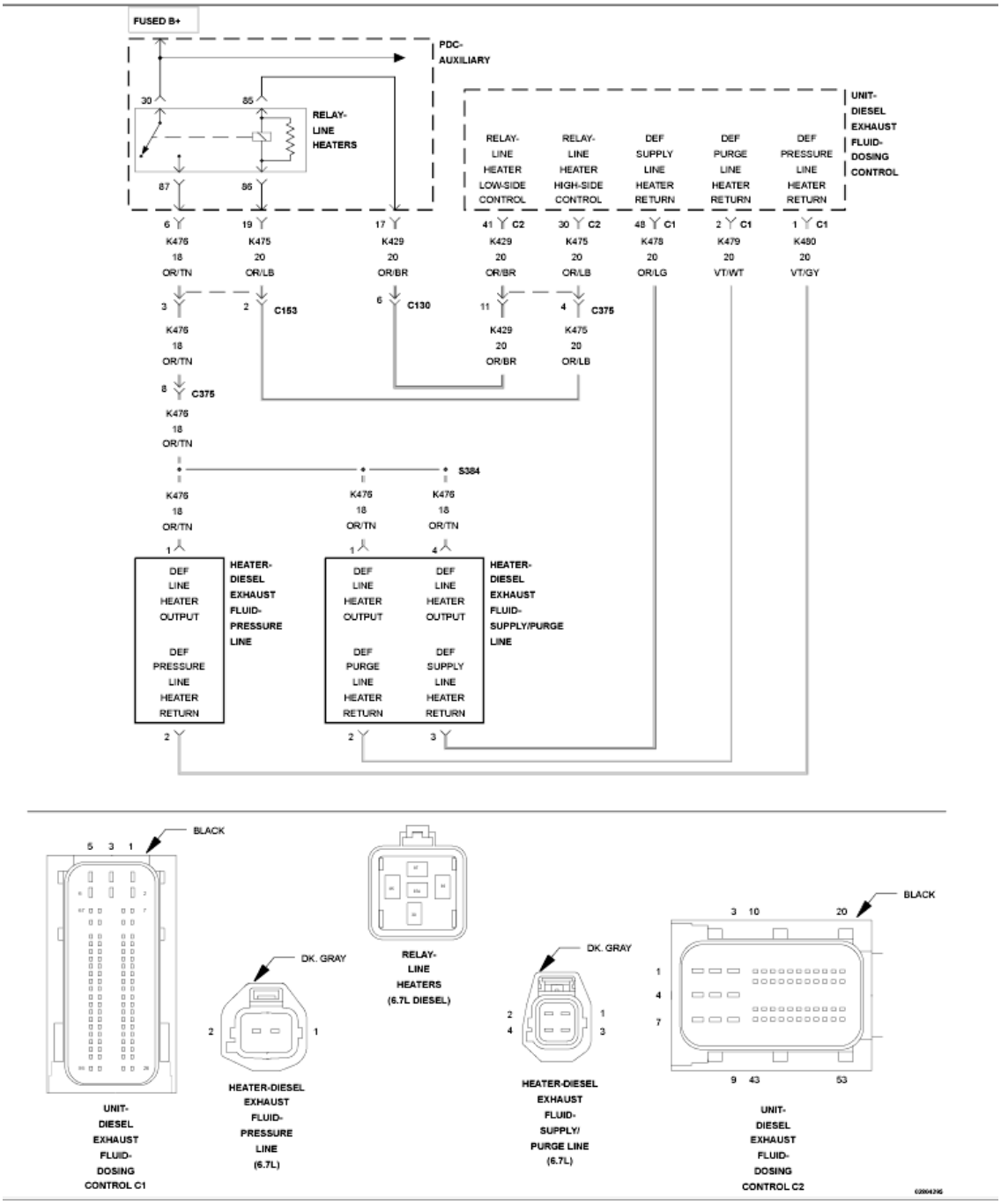

Fig. 1: Diesel Exhaust Fluid Reductant Line Heater Relay Control Circuit Wiring Diagram
Courtesy of CHRYSLER GROUP, LLC

For a complete wiring diagram, **refer to appropriate SYSTEM WIRING DIAGRAMS article** .

THEORY OF OPERATION

Each of the Diesel Exhaust Fluid (DEF) system hoses has a built in heater to warm the fluid in the lines. The three line heaters share a common power supply via the DEF Line Heater Relay which is controlled by the DEF Dosing Control Unit. The DEF Dosing Control Unit controls the heaters individually through the line heater

return circuits. The three line heater circuits are monitored at the return circuit. The DEF Dosing Control Unit will illuminate the MIL light via the Powertrain Control Module (PCM) immediately after the diagnostics runs and fails. The DEF Dosing Control Unit will turn off the MIL light via the PCM when the monitor runs and passes in three consecutive key cycles.

WHEN MONITORED:

Continuously with the ignition on.

SET CONDITION:

The DEF Dosing Control Unit detects that the DEF Line Heater Relay Control circuit voltage is above a calibrated value.

POSSIBLE CAUSES

Possible Causes
(K475) DEF LINE HEATER RELAY SIGNAL CIRCUIT SHORTED TO VOLTAGE
(K429) DEF LINE HEATER RELAY CONTROL CIRCUIT SHORTED TO VOLTAGE
DEF LINE HEATER RELAY
DEF DOSING CONTROL UNIT

Always perform the Pre-Diagnostic Troubleshooting procedure before proceeding. Refer to PRE-DIAGNOSTIC TROUBLESHOOTING PROCEDURE - 6.7L .

NOTE: **The DEF Line Heater monitor runs only when the DEF Line Heater Relay is commanded on. If the ambient temperature is too warm for the DEF Line Heaters to be turned on, the DTC will remain active and will not be able to be erased after repair is completed. Using the scan tool, navigate to Actuator Tests and actuate the Line Heater Relay test for the appropriate Line Heater to run the diagnostic and determine if the repair has been completed. If the repair is complete, the fault will move to stored and be able to be cleared with the scan tool.**

DIAGNOSTIC TEST

1. **ACTIVE DTC**
    1. Turn the ignition on.
    2. With the scan tool, View DTCs.

    Is the DTC active?

    Yes

    - Go To 2.

No

- Perform the INTERMITTENT CONDITION diagnostic procedure. Refer to **INTERMITTENT CONDITION - 6.7L** .

2. **CHECK THE DEF LINE HEATER RELAY**
   1. With the scan tool, Erase DTCs.
   2. Turn the ignition off.
   3. Replace the DEF Line Heater Relay with a known good relay.
   4. Turn the ignition on.
   5. With the scan tool, navigate to Actuator Tests and actuate the Line Heater Relay.
   6. With the scan tool, View DTCs.

   Did the DTC return?

   Yes

   - Go To 3.

   No

   - Repair complete.
   - Perform the POWERTRAIN VERIFICATION TEST. Refer to **POWERTRAIN VERIFICATION TEST - 6.7L** .

3. **CHECK FOR THE (K475) DEF LINE HEATER RELAY SIGNAL CIRCUIT SHORTED TO ANOTHER CIRCUIT**

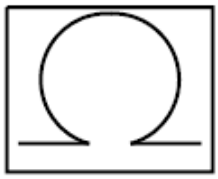

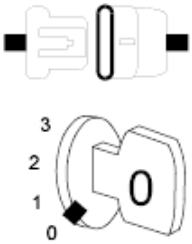

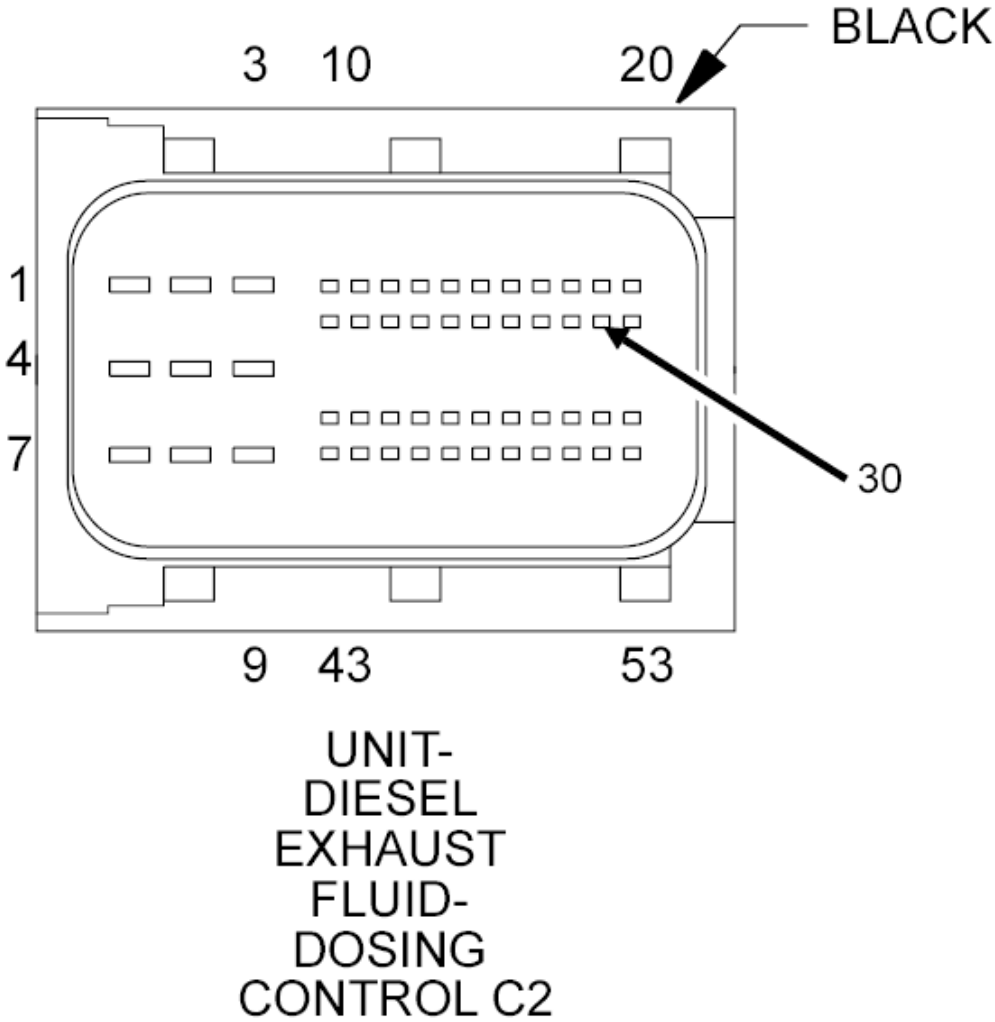

Fig. 2: Checking For DEF Line Heater Relay Signal Circuit For A Short
Courtesy of CHRYSLER GROUP, LLC

1. Stop actuation of the Line Heater Relay.
2. Turn the ignition off.
3. Remove the DEF Line Heater Relay.
4. Disconnect the DEF Dosing Control Unit C2 harness connector.
5. Measure the resistance between the (K475) DEF Line Heater Relay Signal circuit and all other circuits in the DEF Dosing Control Unit C2 harness connector.

   Is the resistance above 10k Ohms between the (K475) DEF Line Heater Relay Signal circuit and all other circuits?

   Yes

   - Go To 4.

   No

   - Repair the (K475) DEF Line Heater Relay Signal circuit for a short to the circuit that measured below 10k Ohms.
   - Perform the POWERTRAIN VERIFICATION TEST. Refer to **POWERTRAIN VERIFICATION TEST - 6.7L** .

4. **CHECK FOR THE (K429) DEF LINE HEATER RELAY CONTROL CIRCUIT SHORTED TO ANOTHER CIRCUIT**

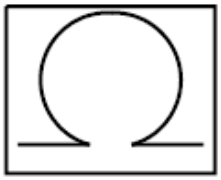

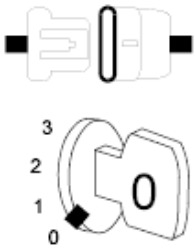

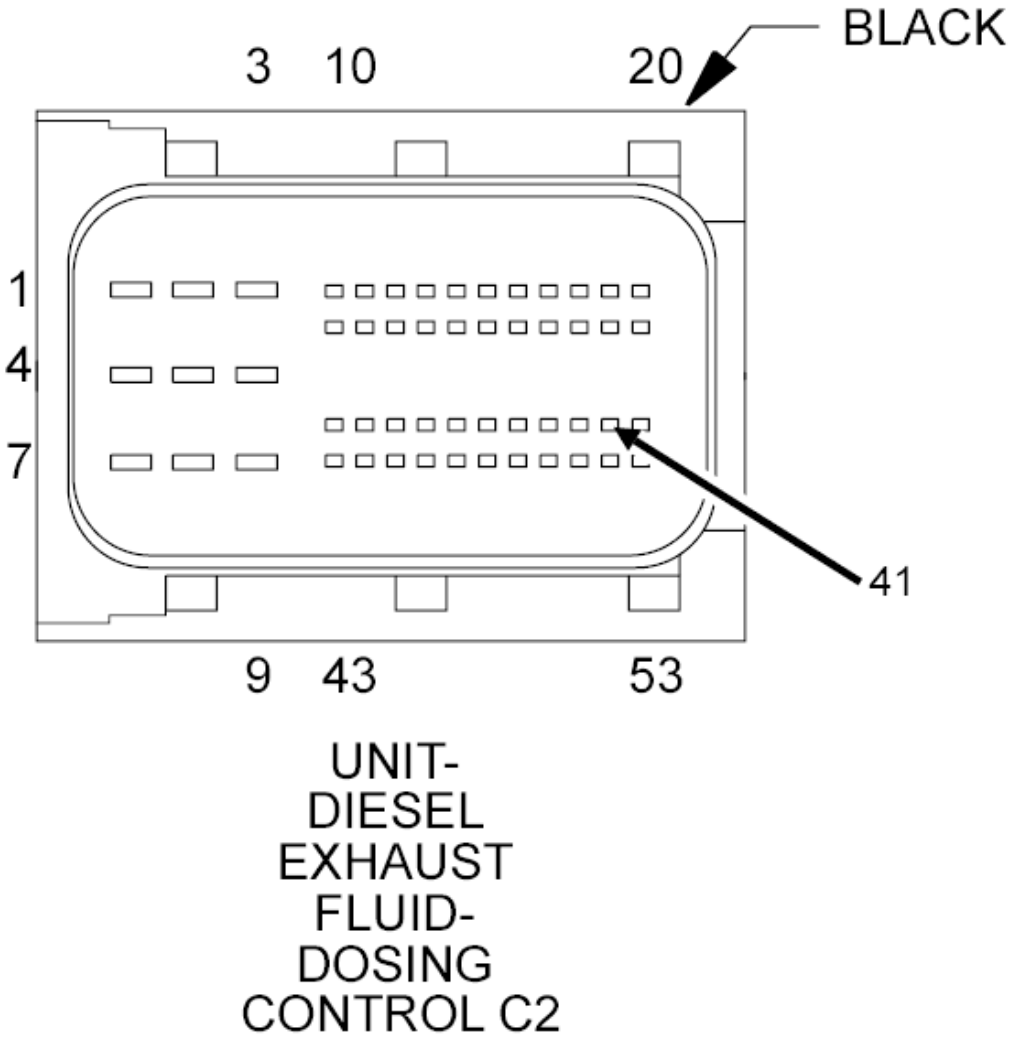

Fig. 3: Checking For DEF Line Heater Relay Control Circuit For A Short
Courtesy of CHRYSLER GROUP, LLC

1. Measure the resistance between the (K429) DEF Line Heater Relay Control circuit and all other circuits in the DEF Dosing Control Unit C2 harness connector.

   Is the resistance above 10k Ohms between the (K429) DEF Line Heater Relay Control circuit and all other circuits?

   Yes

   - Replace the DEF Dosing Control Unit in accordance with the service information. Refer to **UNIT, DIESEL EXHAUST FLUID DOSING CONTROL, REMOVAL** .
   - Perform the POWERTRAIN VERIFICATION TEST. Refer to **POWERTRAIN VERIFICATION TEST - 6.7L** .

   No

   - Repair the (K429) DEF Line Heater Relay Control circuit for a short to the circuit that measured below 10k Ohms.
   - Perform the POWERTRAIN VERIFICATION TEST. Refer to **POWERTRAIN VERIFICATION TEST - 6.7L** .

P2201-AFTERTREATMENT NOX SENSOR CIRCUIT PERFORMANCE - BANK 1 SENSOR 1

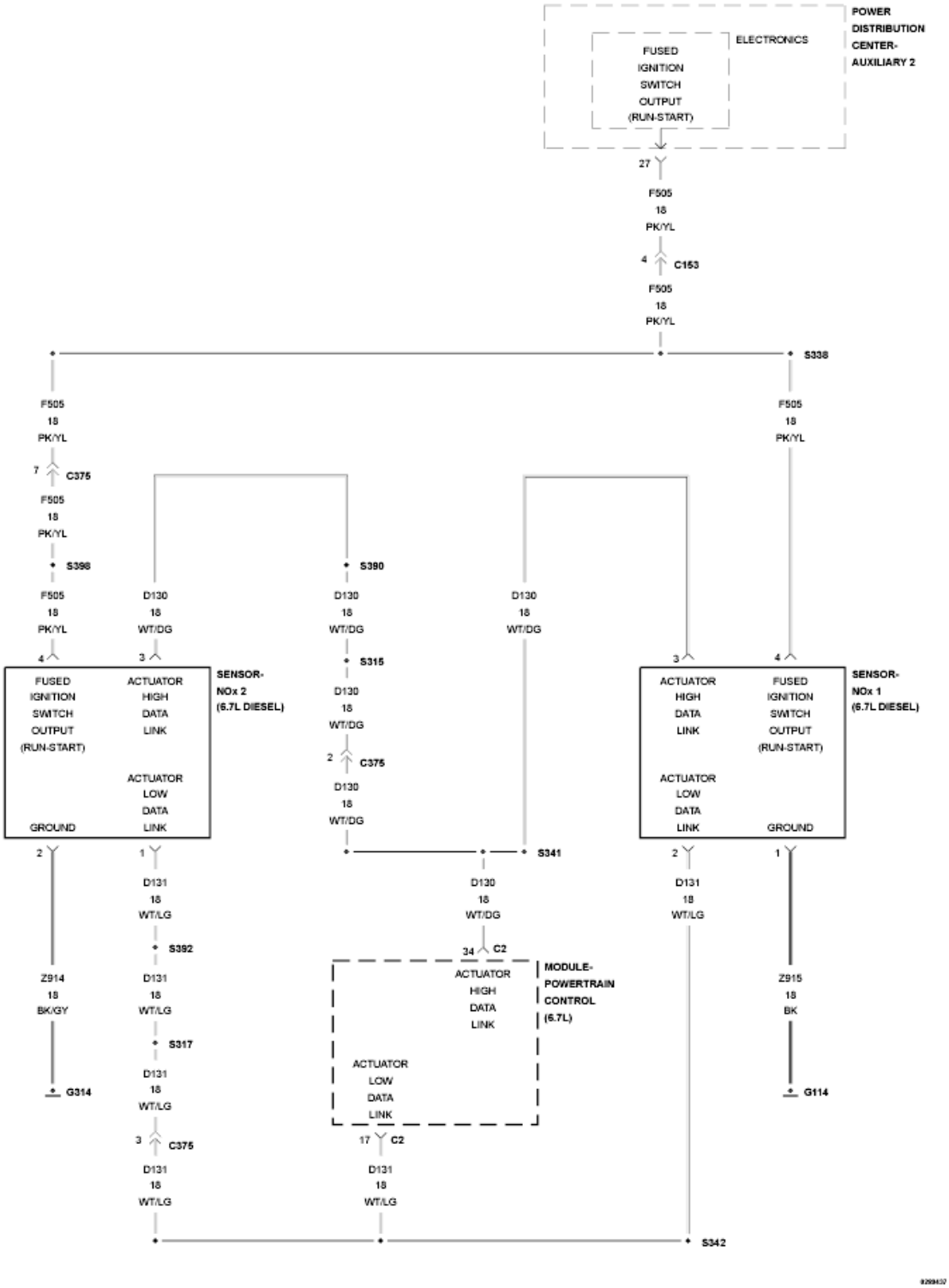

Fig. 4: NOx Sensors Wiring Diagram
Courtesy of CHRYSLER GROUP, LLC

For a complete wiring diagram, **refer to appropriate SYSTEM WIRING DIAGRAMS article** .

THEORY OF OPERATION

The aftertreatment system is equipped with two NOx Sensors and modules. The upstream NOx Sensor 1/1 is located before the SCR Catalyst and is permanently connected to a corresponding NOx Sensor Module mounted on the right frame rail. The downstream NOx Sensor 1/2 is located at the outlet of the SCR Catalyst and is permanently connected to a corresponding NOx Sensor Module also mounted on the right frame rail. The NOx Sensors and NOx Sensor Modules are calibrated to each other and must be replaced as an assembly. The two NOx Sensor and Module assemblies are not interchangeable. The NOx Sensor Modules are smart devices and communicate with the Powertrain Control Module (PCM) over the J1939 Data Link. The NOx Sensor Modules perform their own internal diagnostics and report malfunctions back to the PCM. The NOx Sensors are used to monitor the efficiency of the SCR Catalyst and dosing system. The PCM will illuminate the MIL lamp immediately after the monitor runs and fails. The PCM will turn off the MIL Lamp after the monitor runs and passes for three consecutive trips.

WHEN MONITORED:

This diagnostic monitor consists of two separate checks. The first check occurs when the engine exhaust temperature at NOx Sensor 1/1 is above 150°C (302°F), and the engine is in a decel condition with zero fueling. The second check occurs when the engine exhaust temperature at NOx Sensor 1/1 is above 150°C (302°F), and the calculated NOx value is changing.

SET CONDITION:

The Powertrain Control Module detects that the NOx Sensor 1/1 reading is not reading zero during decel condition with zero fueling for two consecutive trips or the PCM has detected that the NOx Sensor 1/1 reading is not changing with engine conditions for two consecutive trips.

POSSIBLE CAUSES

Possible Causes
EXCESSIVE FUEL OR OIL INTRODUCED INTO THE EXHAUST SYSTEM
NOx SENSOR 1/1 DRIFTED OUT OF RANGE

Always perform the Pre-Diagnostic Troubleshooting procedure before proceeding. Refer to PRE-DIAGNOSTIC TROUBLESHOOTING PROCEDURE - 6.7L .

DIAGNOSTIC TEST

1. **ACTIVE DTC**

NOTE: **If DTCs P2202, P229E, or P2209 are present, perform the diagnostic for those DTCs before continuing with this test procedure. Refer to P2202, P229E, or P2209.**

1. Start the engine, monitor Exhaust Gas Temperature Sensor 4 until it reaches 150°C (302°F).
2. Drive the vehicle at 50 MPH, ensure that it is not in DPF Regeneration mode.
3. Perform a zero fueling event (decel condition for 10 seconds, with foot off of accelerator pedal).
4. Repeat this condition three to five times.

5. With the scan tool check active DTCs.

   Is the DTC active?

   Yes

   - Go To 2.

   No

   - Perform the INTERMITTENT CONDITION diagnostic procedure. Refer to **INTERMITTENT CONDITION - 6.7L** .

2. **CHECK FOR EXCESSIVE ENGINE OIL BEING INTRODUCED INTO THE AFTERTREATMENT SYSTEM**
   1. Turn the ignition off.
   2. Remove the turbocharger outlet and inspect for signs of oil, fuel or moisture being introduced into the aftertreatment system from the engine.

      Was engine oil, fuel or moisture found in the turbocharger exhaust outlet?

      Yes

      - Locate the cause of possible diesel fuel or engine oil being carried from the engine into the exhaust system. Inspect the SCR Catalyst for possible damage.
      - Perform the POWERTRAIN VERIFICATION TEST. Refer to **POWERTRAIN VERIFICATION TEST - 6.7L** .

      No

      - Replace the NOx Sensor 1/1 in accordance with the service information.
      - Perform the POWERTRAIN VERIFICATION TEST. Refer to **POWERTRAIN VERIFICATION TEST - 6.7L** .

P2202-AFTERTREATMENT NOX SENSOR CIRCUIT - BANK 1 SENSOR 1

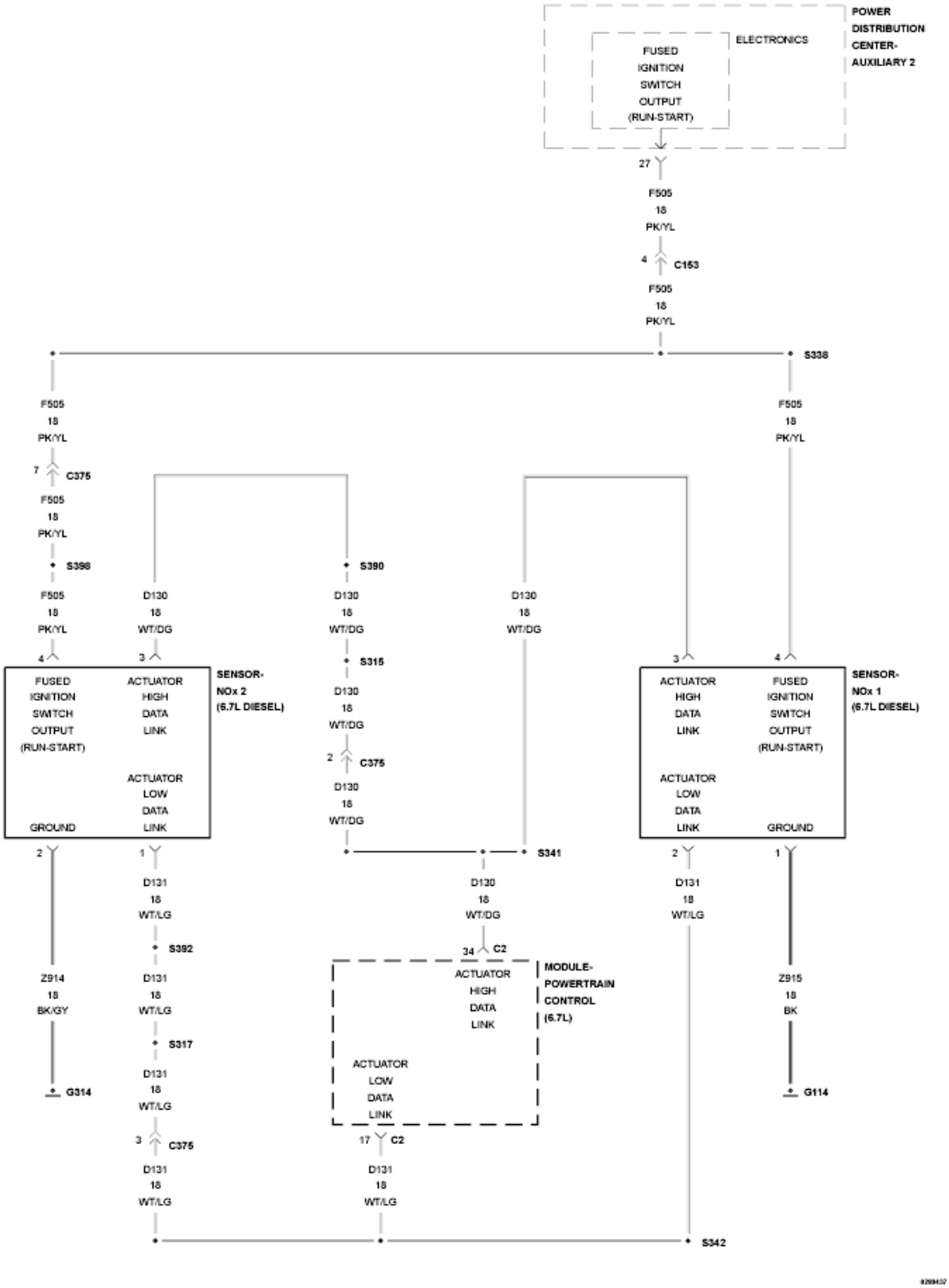

Fig. 5: NOx Sensors Wiring Diagram
Courtesy of CHRYSLER GROUP, LLC

For a complete wiring diagram, **refer to appropriate SYSTEM WIRING DIAGRAMS article** .

THEORY OF OPERATION

The aftertreatment system is equipped with two NOx Sensors and modules. The upstream NOx Sensor 1/1 is located before the SCR Catalyst and is permanently connected to a corresponding NOx Sensor Module mounted on the right frame rail. The downstream NOx Sensor 1/2 is located at the outlet of the SCR Catalyst and is permanently connected to a corresponding NOx Sensor Module also mounted on the right frame rail. The NOx Sensors and NOx Sensor Modules are calibrated to each other and must be replaced as an assembly. The two NOx Sensor and Module assemblies are not interchangeable. The NOx Sensor Modules are smart devices and communicate with the Powertrain Control Module (PCM) over the J1939 Data Link. The NOx Sensor Modules perform their own internal diagnostics and report malfunctions back to the PCM. The NOx Sensors are used to monitor the efficiency of the SCR Catalyst and dosing system.

WHEN MONITORED:

Continuously with engine running.

SET CONDITION:

The NOx Sensor 1/1 detects that the voltage supplied is above or below it's calibrated limits.

POSSIBLE CAUSES

Possible Causes
(F505) FUSED IGNITION SWITCH OUTPUT CIRCUIT OPEN/HIGH RESISTANCE
(F505) FUSED IGNITION SWITCH OUTPUT CIRCUIT SHORTED TO GROUND
(Z915) GROUND CIRCUIT OPEN/HIGH RESISTANCE
(F505) FUSED IGNITION SWITCH OUTPUT CIRCUIT SHORTED TO THE (Z915) GROUND CIRCUIT
FAULTY NOx SENSOR 1/1 INTERNAL HEATER
FAULTY NOx SENSOR 1/1

Always perform the Pre-Diagnostic Troubleshooting procedure before proceeding. Refer to PRE-DIAGNOSTIC TROUBLESHOOTING PROCEDURE - 6.7L .

DIAGNOSTIC TEST

1. **ACTIVE DTC**
    1. Turn the ignition on.
    2. With the scan tool, View DTCs.

    Is the DTC active?

    Yes

    - Go To 3.

    No

- Go To 2.

2. **CHECK THE NOx 1/1 SENSOR INTERNAL HEATER**
   1. Start the engine and allow it to idle for at least two minutes.
   2. With the scan tool, View DTCs.

   Is the DTC active?

   Yes

   - The NOx Sensor 1/1 internal heater has malfunctioned. Replace the NOx Sensor 1/1 in accordance with the service information. Refer to **SENSOR, NOX, REMOVAL** .

   No

   - Go To 3.

3. **CHECK THE NOx SENSOR 1/1 POWER AND GROUND CIRCUITS**
   1. Turn the ignition on, engine not running.
   2. Disconnect the NOx Sensor Module 1/1 harness connector.
   3. Measure the voltage across the (F505) Fused Ignition Switch Output circuit and the (Z915) Ground circuit at the NOx Sensor Module 1/1 harness connector.

   NOTE: Measure the voltage at key on, engine cranking, and at idle.

   Does the voltage read within 1.0 Volt of battery voltage?

   Yes

   - Replace the NOx Sensor 1/1 in accordance with the service information. Refer to **SENSOR, NOX, REMOVAL** .
   - Perform the POWERTRAIN VERIFICATION TEST. Refer to **POWERTRAIN VERIFICATION TEST - 6.7L** .

   No

   - Go To 4.

4. **CHECK FOR VOLTAGE AT THE (F505) FUSED IGNITION SWITCH OUTPUT CIRCUIT**
   1. Measure voltage between ground and the (F505) Fused Ignition Switch Output circuit of the NOx Sensor Module 1/1 harness connector.

   Does the voltage read within 1.0 Volt of battery voltage?

   Yes

   - Repair the (Z915) Ground circuit for an open or high resistance.

- Perform the POWERTRAIN VERIFICATION TEST. Refer to **POWERTRAIN VERIFICATION TEST - 6.7L** .

No

- Repair the (F505) Fused Ignition Switch Output circuit for an open or high resistance. If the fuse is found to be open, check the circuit for a short to the (Z915) Ground circuit or a short to chassis ground.
- Perform the POWERTRAIN VERIFICATION TEST. Refer to **POWERTRAIN VERIFICATION TEST - 6.7L** .

P2209-NOX SENSOR HEATER CIRCUIT PERFORMANCE - BANK 1 SENSOR 1

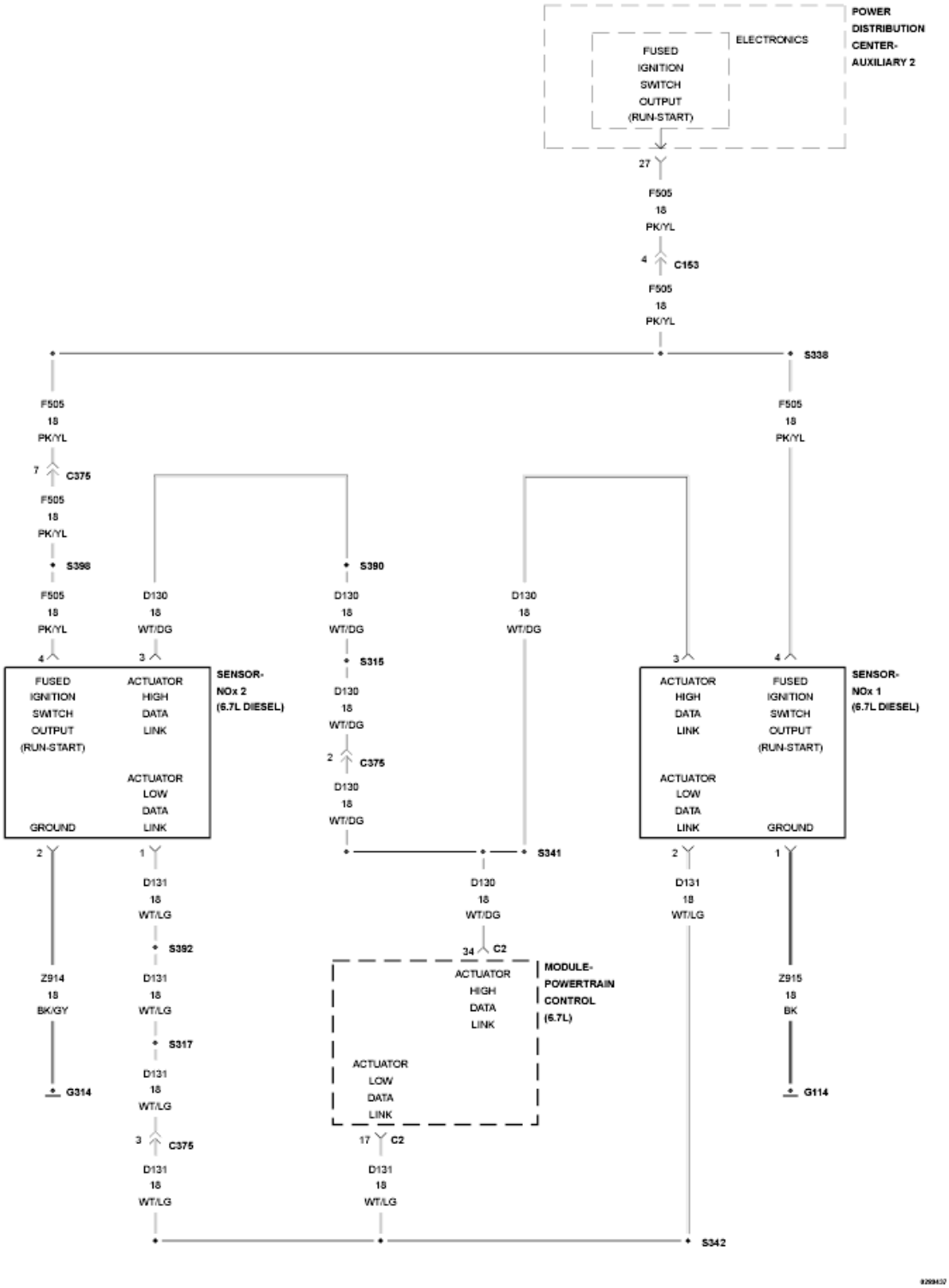

Fig. 6: NOx Sensors Wiring Diagram
Courtesy of CHRYSLER GROUP, LLC

For a complete wiring diagram, **refer to appropriate SYSTEM WIRING DIAGRAMS article** .

THEORY OF OPERATION

The aftertreatment system is equipped with two NOx Sensors and modules. The upstream NOx Sensor 1/1 is located before the SCR Catalyst and is permanently connected to a corresponding NOx Sensor Module mounted on the right frame rail. The downstream NOx Sensor 1/2 is located at the outlet of the SCR Catalyst and is permanently connected to a corresponding NOx Sensor Module also mounted on the right frame rail. The NOx Sensors and NOx Sensor Modules are calibrated to each other and must be replaced as an assembly. The two NOx Sensor and Module assemblies are not interchangeable. The NOx Sensor Modules are smart devices and communicate with the Powertrain Control Module (PCM) over the J1939 Data Link. The NOx Sensor Modules perform their own internal diagnostics and report malfunctions back to the PCM. The NOx Sensors are used to monitor the efficiency of the SCR Catalyst and dosing system. The PCM will illuminate the MIL lamp immediately after the monitor runs and fails. The PCM will turn off the MIL Lamp after the monitor runs and passes for three consecutive trips.

WHEN MONITORED:

When the engine is running and the exhaust temperature at NOx Sensor 1/1 is above 150°C (302°F).

SET CONDITION:

The Powertrain Control Module detects that the NOx Sensor heater is unable to maintain its normal operating temperature.

POSSIBLE CAUSES

Possible Causes
OTHER NOx SENSOR RELATED DTCS
NOx SENSOR 1/1

Always perform the Pre-Diagnostic Troubleshooting procedure before proceeding. Refer to PRE-DIAGNOSTIC TROUBLESHOOTING PROCEDURE - 6.7L .

DIAGNOSTIC TEST

1. **ACTIVE DTC**
    1. Ignition on, engine not running.
    2. With the scan tool check for active DTCs.

       Is the DTC active?

       Yes

       - Replace the NOx Sensor 1/1 in accordance with the service information. Refer to **SENSOR, NOX, REMOVAL** .

       NOTE: **If DTCs P2202, P220A, or U029D are present, perform the diagnostic for those DTCs before replacing the NOx Sensor. Refer to P2202, P220A, or U029D.**

No

- Perform the INTERMITTENT CONDITION diagnostic procedure. Refer to **INTERMITTENT CONDITION - 6.7L** .

P220A-NOX SENSOR SUPPLY CIRCUIT PERFORMANCE - BANK 1 SENSOR 1

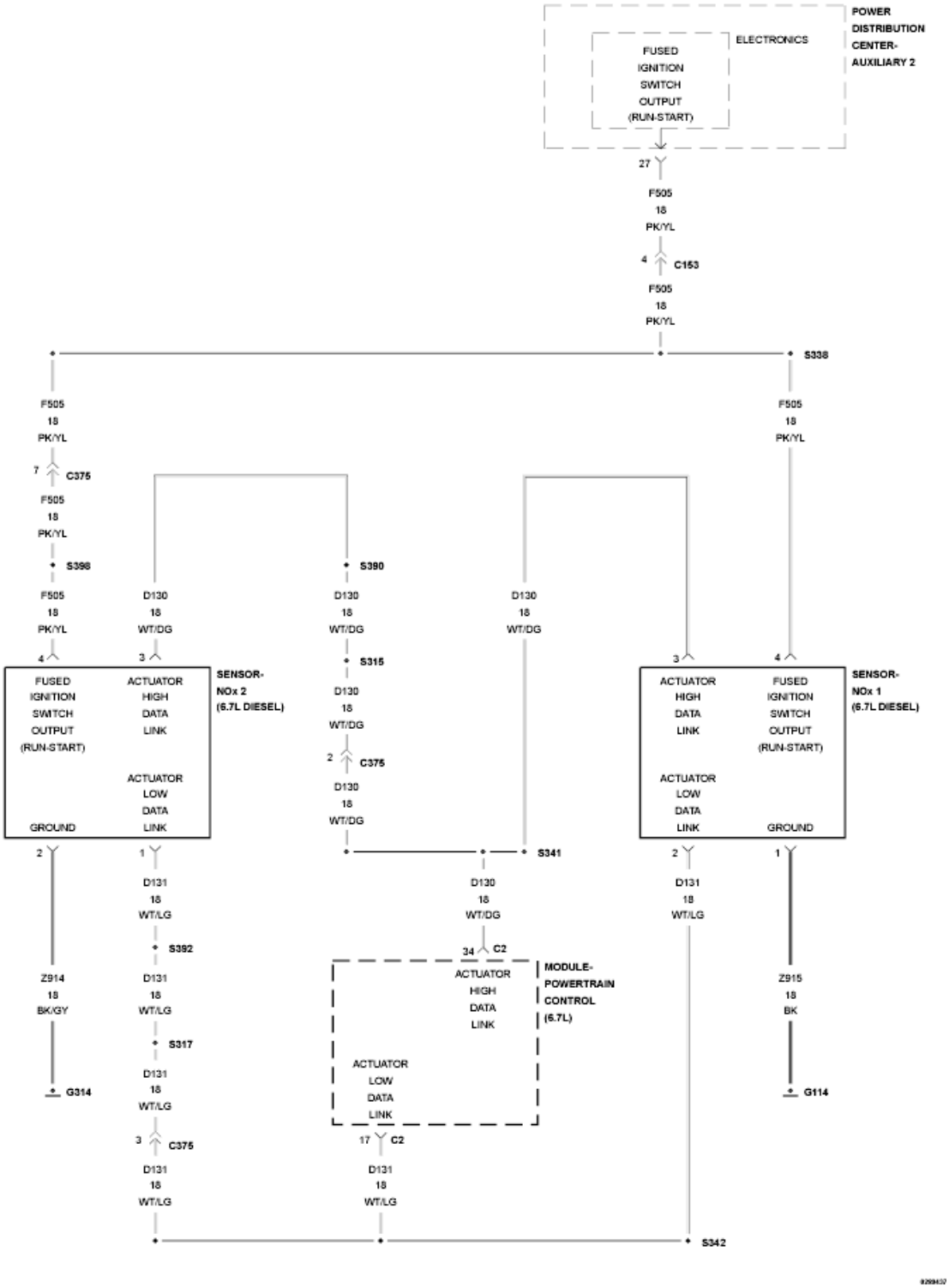

Fig. 7: NOx Sensors Wiring Diagram
Courtesy of CHRYSLER GROUP, LLC

For a complete wiring diagram, **refer to appropriate SYSTEM WIRING DIAGRAMS article** .

THEORY OF OPERATION

The aftertreatment system is equipped with two NOx Sensors and modules. The upstream NOx Sensor 1/1 is located before the DOC/DPF Catalyst and is permanently connected to a corresponding NOx Sensor Module mounted on the right frame rail. The downstream NOx Sensor 1/2 is located at the outlet of the DOC/DPF Catalyst and is permanently connected to a corresponding NOx Sensor Module also mounted on the right frame rail. The NOx Sensors and NOx Sensor Modules are calibrated to each other and must be replaced as an assembly. The two NOx Sensor and Module assemblies are not interchangeable. The NOx Sensor Modules are smart devices and communicate with the Powertrain Control Module (PCM) over the J1939 Data Link. The NOx Sensor Modules perform their own internal diagnostics and report malfunctions back to the PCM. The NOx Sensors are used to monitor the efficiency of the SCR Catalyst and dosing system. The PCM will illuminate the MIL lamp after the monitor runs and fails in two consecutive trips. The PCM will turn off the MIL Lamp after the monitor runs and passes for three consecutive trips.

WHEN MONITORED:

When the engine is running and the exhaust temperature at NOx Sensor 1/1 is above 150°C (302°F).

SET CONDITION:

The Powertrain Control Module detects that the voltage supply to the NOx Sensor Module 1/1 is above or below a calibrated threshold.

POSSIBLE CAUSES

Possible Causes
(F505) FUSED IGNITION SWITCH OUTPUT CIRCUIT OPEN/HIGH RESISTANCE
(F505) FUSED IGNITION SWITCH OUTPUT CIRCUIT SHORTED TO GROUND
(Z915) GROUND CIRCUIT OPEN/HIGH RESISTANCE
(F505) FUSED IGNITION SWITCH OUTPUT SHORTED TO THE (Z915) GROUND CIRCUIT
FAULTY NOx SENSOR 1/1

Always perform the Pre-Diagnostic Troubleshooting procedure before proceeding. Refer to PRE-DIAGNOSTIC TROUBLESHOOTING PROCEDURE - 6.7L .

DIAGNOSTIC TEST

1. **ACTIVE DTC**
    1. Start the engine and allow the DOC/DPF Catalyst intake temperature to reach 150°C (302°F).

       NOTE: This can be determined by reading the temperatures of the first three Exhaust Gas Temperature Sensors with the scan tool.

    2. With the scan tool check active DTCs.

       Is the DTC active?

       Yes

- Go To 2.

No

- Perform the INTERMITTENT CONDITION diagnostic procedure. Refer to **INTERMITTENT CONDITION - 6.7L** .

2. **CHECK THE NOx SENSOR 1/1 POWER AND GROUND CIRCUITS**
   1. Turn the ignition on, engine not running.
   2. Disconnect the NOx Sensor Module 1/1 harness connector.
   3. Measure the voltage across the (F505) Fused Ignition Switch Output circuit and the (Z915) Ground circuit at the NOx Sensor Module 1/1 harness connector.

   NOTE: Measure the voltage at key on, engine cranking, and at idle.

   Does the voltage read within 1.0 Volt of battery voltage?

   Yes

   - Replace the NOx Sensor 1/1 in accordance with the service information. Refer to **SENSOR, NOX, REMOVAL** .
   - Perform the POWERTRAIN VERIFICATION TEST. Refer to **POWERTRAIN VERIFICATION TEST - 6.7L** .

   No

   - Go To 3.

3. **CHECK FOR VOLTAGE AT THE (F505) FUSED IGNITION SWITCH OUTPUT CIRCUIT**
   1. Measure the voltage between ground and the (F505) Fused Ignition Switch Output circuit at the NOx Sensor Module 1/1 harness connector.

   Does the voltage read within 1.0 Volt of battery voltage?

   Yes

   - Repair the (Z915) Ground circuit for an open or high resistance.
   - Perform the POWERTRAIN VERIFICATION TEST. Refer to **POWERTRAIN VERIFICATION TEST - 6.7L** .

   No

   - Repair the (F505) Fused Ignition Switch Output circuit for an open or high resistance. If the fuse is found to be open, check the circuit for a short to the (Z915) Ground circuit or a short to chassis ground.
   - Perform the POWERTRAIN VERIFICATION TEST. Refer to **POWERTRAIN**

VERIFICATION TEST - 6.7L .

P220B-NOX SENSOR SUPPLY CIRCUIT PERFORMANCE - BANK 1 SENSOR 2

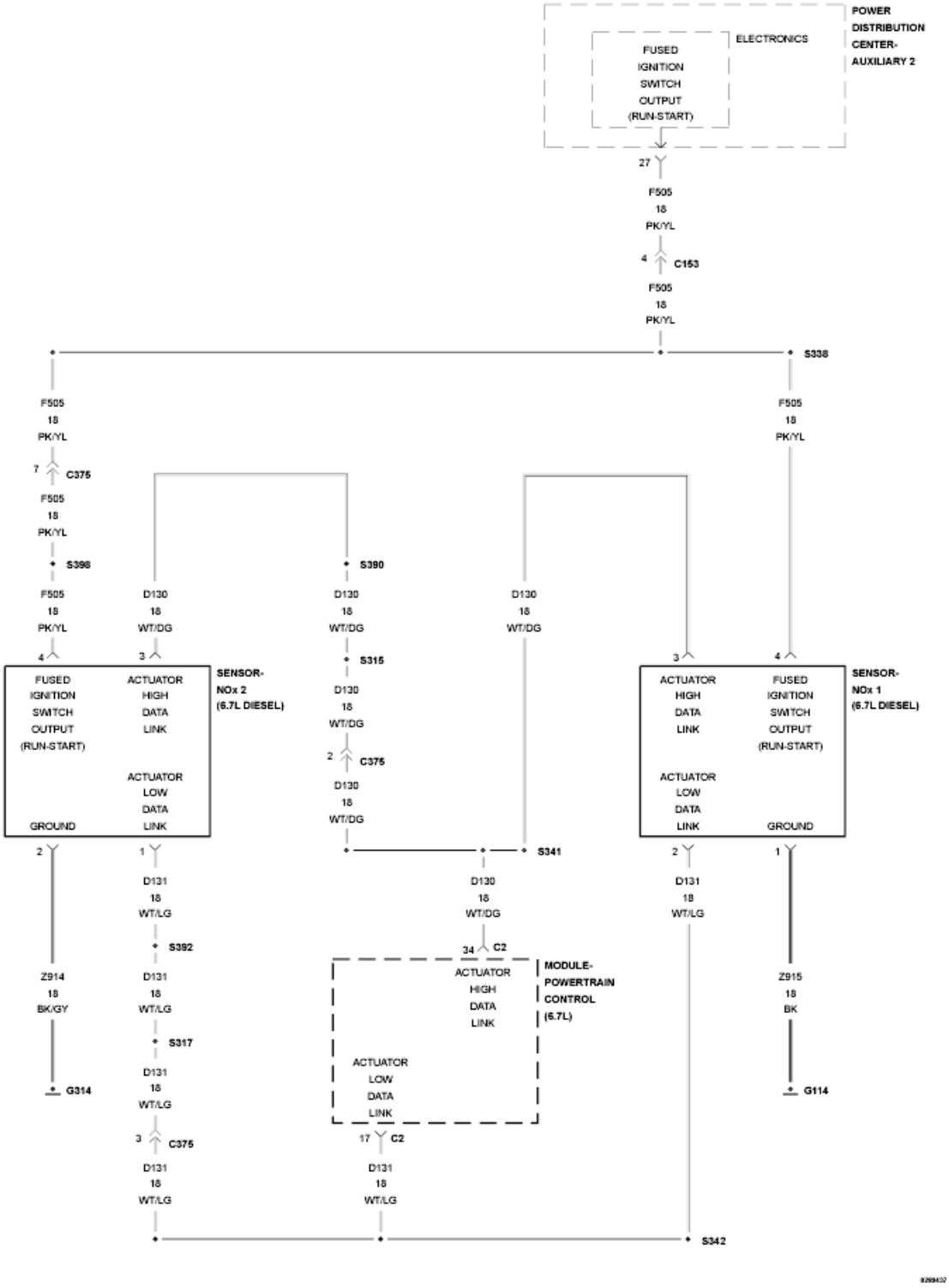

Fig. 8: NOx Sensors Wiring Diagram
Courtesy of CHRYSLER GROUP, LLC

For a complete wiring diagram, **refer to appropriate SYSTEM WIRING DIAGRAMS article** .

THEORY OF OPERATION

The aftertreatment system is equipped with two NOx Sensors and modules. The upstream NOx Sensor 1/1 is located before the DOC/DPF Catalyst and is permanently connected to a corresponding NOx Sensor Module mounted on the right frame rail. The downstream NOx Sensor 1/2 is located at the outlet of the DOC/DPF Catalyst and is permanently connected to a corresponding NOx Sensor Module also mounted on the right frame rail. The NOx Sensors and NOx Sensor Modules are calibrated to each other and must be replaced as an assembly. The two NOx Sensor and Module assemblies are not interchangeable. The NOx Sensor Modules are smart devices and communicate with the Powertrain Control Module (PCM) over the J1939 Data Link. The NOx Sensor Modules perform their own internal diagnostics and report malfunctions back to the PCM. The NOx Sensors are used to monitor the efficiency of the SCR Catalyst and dosing system. The PCM will illuminate the MIL lamp after the monitor runs and fails in two consecutive trips. The PCM will turn off the MIL Lamp after the monitor runs and passes for three consecutive trips.

WHEN MONITORED:

When the engine is running and the exhaust temperature at NOx Sensor 1/2 is above 150°C (302°F).

SET CONDITION:

The Powertrain Control Module detects that the voltage supply to the NOx Sensor Module 1/2 is above or below a calibrated threshold.

POSSIBLE CAUSES

Possible Causes
(F505) FUSED IGNITION SWITCH OUTPUT CIRCUIT OPEN/HIGH RESISTANCE
(F505) FUSED IGNITION SWITCH OUTPUT CIRCUIT SHORTED TO GROUND
(Z914) GROUND CIRCUIT OPEN/HIGH RESISTANCE
(F505) FUSED IGNITION SWITCH OUTPUT CIRCUIT SHORTED TO THE (Z914) GROUND CIRCUIT
FAULTY NOx SENSOR 1/2

Always perform the Pre-Diagnostic Troubleshooting procedure before proceeding. Refer to PRE-DIAGNOSTIC TROUBLESHOOTING PROCEDURE - 6.7L .

DIAGNOSTIC TEST

1. **ACTIVE DTC**
    1. Start the engine and allow the DOC/DPF Catalyst intake temperature to reach 150°C (302°F).

NOTE: **This can be determined by reading the temperature of the Exhaust Gas Temperature Sensor 4 with the scan tool.**

2. With the scan tool check active DTCs.

   Is the DTC active?

   Yes

   - Go To 2.

   No

   - Perform the INTERMITTENT CONDITION diagnostic procedure. Refer to **INTERMITTENT CONDITION - 6.7L** .

2. **CHECK THE NOx SENSOR 1/2 POWER AND GROUND CIRCUITS**
   1. Turn the ignition on, engine not running.
   2. Disconnect the NOx Sensor Module 1/2 harness connector.
   3. Measure the voltage across the (F505) Fused Ignition Switch Output circuit and the (Z914) Ground circuit at the NOx Sensor Module 1/2 harness connector.

      NOTE: Measure the voltage at key on, engine cranking, and at idle.

      Does the voltage read within 1.0 Volt of battery voltage?

      Yes

      - Replace the NOx Sensor 1/2 in accordance with the service information. Refer to **SENSOR, NOX, REMOVAL** .
      - Perform the POWERTRAIN VERIFICATION TEST. Refer to **POWERTRAIN VERIFICATION TEST - 6.7L** .

      No

      - Go To 3.

3. **CHECK FOR VOLTAGE AT THE (F505) FUSED IGNITION SWITCH OUTPUT CIRCUIT**
   1. Measure the voltage between ground and the (F505) Fused Ignition Switch Output circuit at the NOx Sensor Module 1/2 harness connector.

      Does the voltage read within 1.0 Volt of battery voltage?

      Yes

      - Repair the (Z914) Ground circuit for an open or high resistance.
      - Perform the POWERTRAIN VERIFICATION TEST. Refer to **POWERTRAIN VERIFICATION TEST - 6.7L** .

      No

- Repair the (F505) Fused Ignition Switch Output circuit for an open or high resistance. If the fuse is found to be open, check the circuit for a short to the (Z915) Ground circuit or a short to chassis ground.
- Perform the POWERTRAIN VERIFICATION TEST. Refer to **POWERTRAIN VERIFICATION TEST - 6.7L** .

P2227-BAROMETERIC PRESSURE SENSOR RATIONALITY

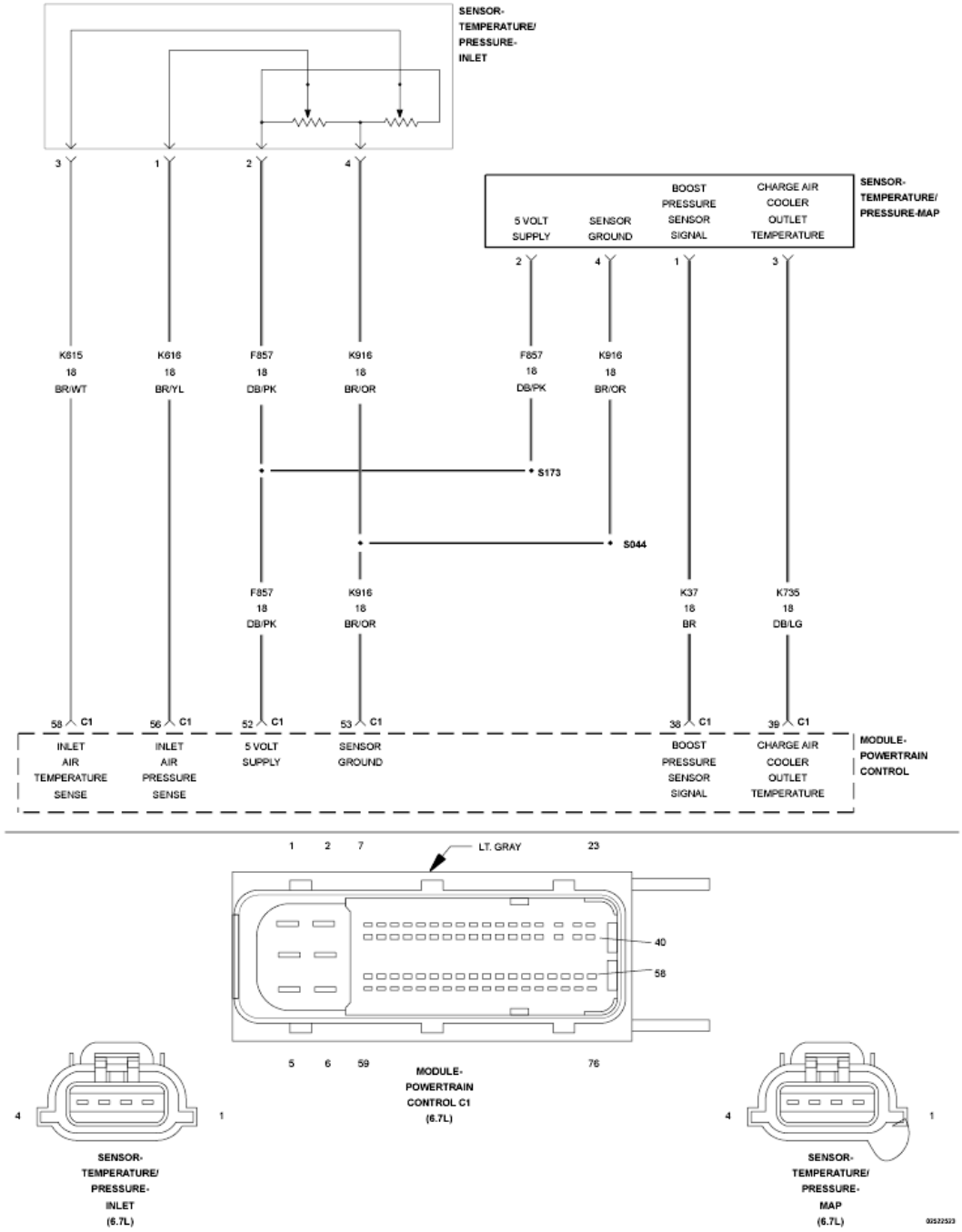

Fig. 9: Inlet Air Temperature Sensor Circuit Schematic

Courtesy of CHRYSLER GROUP, LLC

For a complete wiring diagram, **refer to appropriate SYSTEM WIRING DIAGRAMS article** .

THEORY OF OPERATION

The barometric pressure is measured by the Inlet Air Temperature/Pressure Sensor, which is located on the Air Cleaner Assembly. There is a key on check and a rationality check. At key on, the readings for the Intake Manifold Pressure Sensor, Exhaust Gas Pressure Sensor, and Inlet Air Pressure Sensor are compared. This fault code occurs if the inlet air pressure reading is different from the other two. During normal engine operation the rationality check verifies the inlet air pressure is reading an unreasonable value for a calibrated period of time then an error is recorded. The key-on portion of the rationality will light the MIL immediately after the diagnostic runs and fails. The rationality portion is a one trip fault. During this time the Powertrain Control Module (PCM) uses an estimated barometric pressure. The PCM turns off the MIL when the diagnostic runs and passes in four consecutive drive cycles.

WHEN MONITORED:

Key off.

SET CONDITION:

The Powertrain Control Module (PCM) detects that the key off value differs from the other pressure sensors by a calibrated amount.

POSSIBLE CAUSES

Possible Causes
INLET TEMPERATURE/PRESSURE SENSOR

Always perform the Pre-Diagnostic Troubleshooting procedure before proceeding. Refer to PRE-DIAGNOSTIC TROUBLESHOOTING PROCEDURE - 6.7L .

DIAGNOSTIC TEST

1. **INLET TEMPERATURE/PRESSURE SENSOR**
    1. Turn the ignition on.
    2. Wait five seconds after ignition is turned on, using the scan tool, check DTCs.

       Is P2227 Active or Stored?

       Active

       - Replace the Inlet Air Temperature/Pressure Sensor.
       - Perform the POWERTRAIN VERIFICATION TEST. Refer to **POWERTRAIN VERIFICATION TEST - 6.7L** .

Stored

- Go To 2.

2. **INTERMITTENT CONDITION**
   1. Erase the DTC with the scan tool.
   2. Start the engine and let it idle for 1 minute. With the scan tool in sensors, monitor the Inlet Air Pressure Sensor reading.

      Does the value change, indicating the sensor is not stuck?

      Yes

      - Perform the INTERMITTENT CONDITION diagnostic procedure. Refer to **INTERMITTENT CONDITION - 6.7L** .

      No

      - Replace the Inlet Air Temperature/Pressure Sensor in accordance with the service information.
      - Perform the POWERTRAIN VERIFICATION TEST. Refer to **POWERTRAIN VERIFICATION TEST - 6.7L** .

P2228-BAROMETRIC PRESSURE CIRCUIT LOW

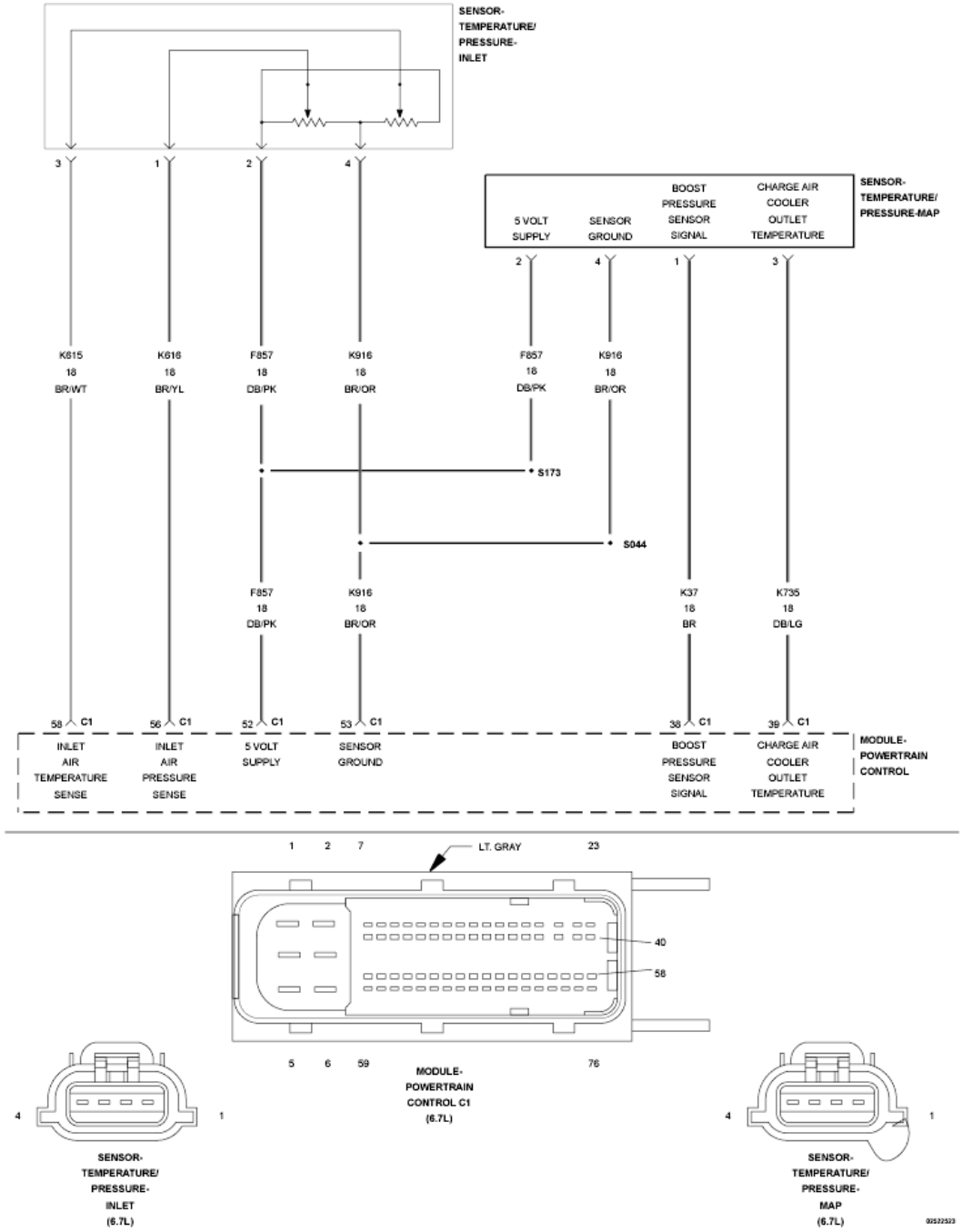

Fig. 10: Inlet Air Temperature Sensor Circuit Schematic
Courtesy of CHRYSLER GROUP, LLC

For a complete wiring diagram, **refer to appropriate SYSTEM WIRING DIAGRAMS article** .

THEORY OF OPERATION

The barometric pressure is measured by the Inlet Air Temperature/Pressure Sensor, which is located on the Air Cleaner Assembly. There is a key on check and a rationality check. At key on, the readings for the Intake Manifold Pressure Sensor, Exhaust Gas Pressure Sensor, and Inlet Air Pressure Sensor are compared. This fault

code occurs if the inlet air pressure reading is different from the other two. During normal engine operation the rationality check verifies the inlet air pressure is reading an unreasonable value for a calibrated period of time then an error is recorded. The key-on portion of the rationality will light the MIL immediately after the diagnostic runs and fails. The rationality portion is a one trip fault. During this time the Powertrain Control Module (PCM) uses an estimated barometric pressure. The PCM turns off the MIL when the diagnostic runs and passes in four consecutive drive cycles.

WHEN MONITORED:

Any time the PCM is powered up.

SET CONDITION:

The circuit voltage to the PCM falls below 0.23 Volts for one second.

POSSIBLE CAUSES

Possible Causes
(F857) 5-VOLT SUPPLY CIRCUIT OPEN OR SHORTED TO GROUND
(K616) INLET AIR PRESSURE SIGNAL CIRCUIT SHORTED TO GROUND
(K616) INLET AIR PRESSURE SIGNAL CIRCUIT SHORTED TO THE (K916) SENSOR GROUND CIRCUIT
(K616) INLET AIR PRESSURE SIGNAL CIRCUIT OPEN/HIGH RESISTANCE
INLET TEMPERATURE/PRESSURE SENSOR
POWERTRAIN CONTROL MODULE (PCM)

Always perform the Pre-Diagnostic Troubleshooting procedure before proceeding. Refer to PRE-DIAGNOSTIC TROUBLESHOOTING PROCEDURE - 6.7L .

DIAGNOSTIC TEST

1. **ACTIVE DTC**
    1. Turn the ignition on.
    2. With the scan tool, record all Freeze frame data.
    3. With the scan tool, erase DTCs.
    4. Turn the ignition off for 75 seconds.
    5. Turn the ignition on.
    6. With the scan tool, read DTCs.

    Did the DTC reset?

    Yes

    - Go To 2.

No

- Perform the INTERMITTENT CONDITION diagnostic procedure. Refer to **INTERMITTENT CONDITION - 6.7L** .

2. **CHECK THE (F857) 5-VOLT SUPPLY CIRCUIT FOR AN OPEN OR SHORT TO GROUND**
   1. The (F855) 5-Volt Supply circuit also supplies the MAP Sensor, Fuel Pressure Sensor, Exhaust Pressure Sensor, and Crankcase Pressure Sensor.

      Are DTCs present for the MAP Sensor, Fuel Pressure Sensor, Exhaust Pressure Sensor, and Crankcase Pressure Sensor in addition to this DTC?

      Yes

      - Repair the (F857) 5-Volt Supply circuit for an open or short to ground.
      - Perform the POWERTRAIN VERIFICATION TEST. Refer to **POWERTRAIN VERIFICATION TEST - 6.7L** .

      No

      - Go To 3.

3. **CHECK THE (K616) INLET AIR PRESSURE SIGNAL CIRCUIT FOR A SHORT TO GROUND**

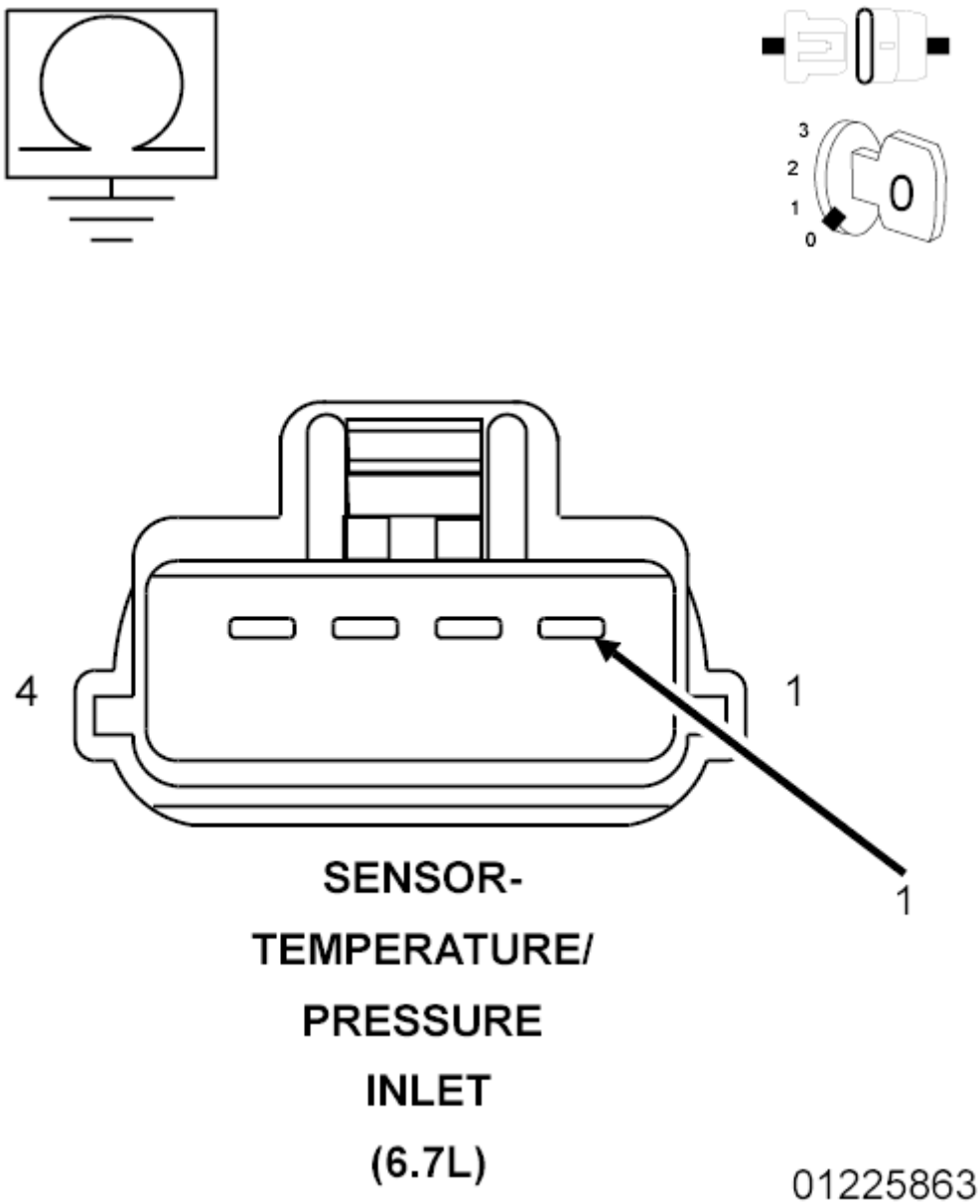

Fig. 11: Checking Inlet Air Pressure Signal Circuit For Short To Ground
Courtesy of CHRYSLER GROUP, LLC

1. Turn the ignition off.
2. Disconnect the Inlet Air Temperature/Pressure harness connector.
3. Measure the resistance between ground and the (K616) Inlet Air Pressure Signal circuit in the Inlet Air Temperature/Pressure Sensor harness connector.

   Is the resistance below 10k Ohms?

   Yes

- Repair the (K616) Inlet Air Pressure Signal circuit for a short to ground.
- Perform the POWERTRAIN VERIFICATION TEST. Refer to **POWERTRAIN VERIFICATION TEST - 6.7L** .

No

- Go To 4.

4. **CHECK FOR THE (K616) INLET AIR PRESSURE SIGNAL CIRCUIT SHORTED TO THE (K916) SENSOR GROUND CIRCUIT**

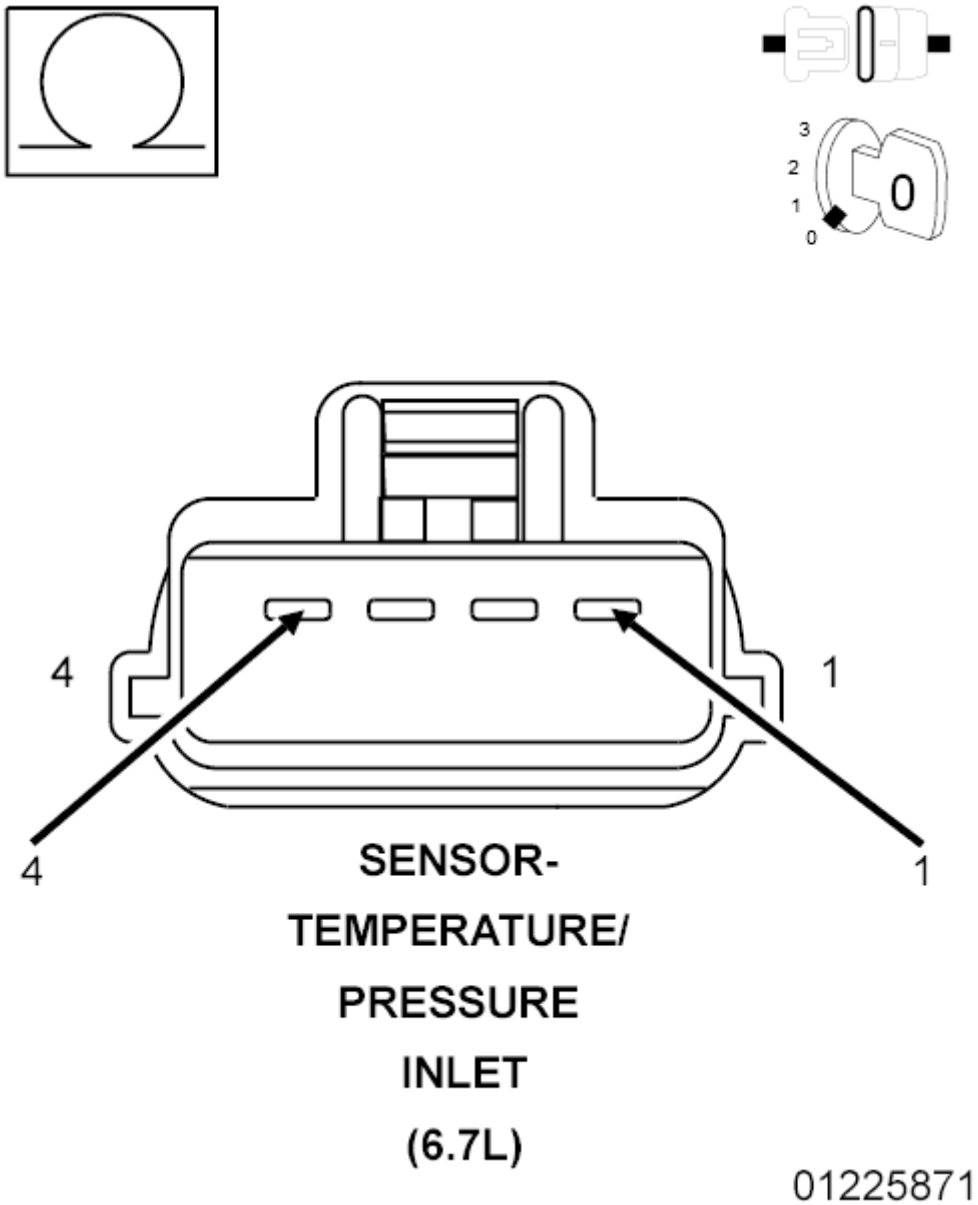

Fig. 12: Checking Inlet Air Pressure Signal Circuit For Short To Sensor Ground Circuit
Courtesy of CHRYSLER GROUP, LLC

1. Measure the resistance between the (K616) Inlet Air Pressure Signal circuit and (K916) Sensor Ground circuit at the Inlet Air Temperature/Pressure Sensor harness connector.

   Is the resistance below 10k Ohms?

   Yes

   - Repair the short between the (K616) Inlet Air Pressure Signal circuit and (K916) Sensor Ground circuit.
   - Perform the POWERTRAIN VERIFICATION TEST. Refer to **POWERTRAIN VERIFICATION TEST - 6.7L** .

   No

   - Go To 5.

5. **CHECK THE (K616) INLET AIR PRESSURE SIGNAL CIRCUIT FOR AN OPEN/HIGH RESISTANCE**

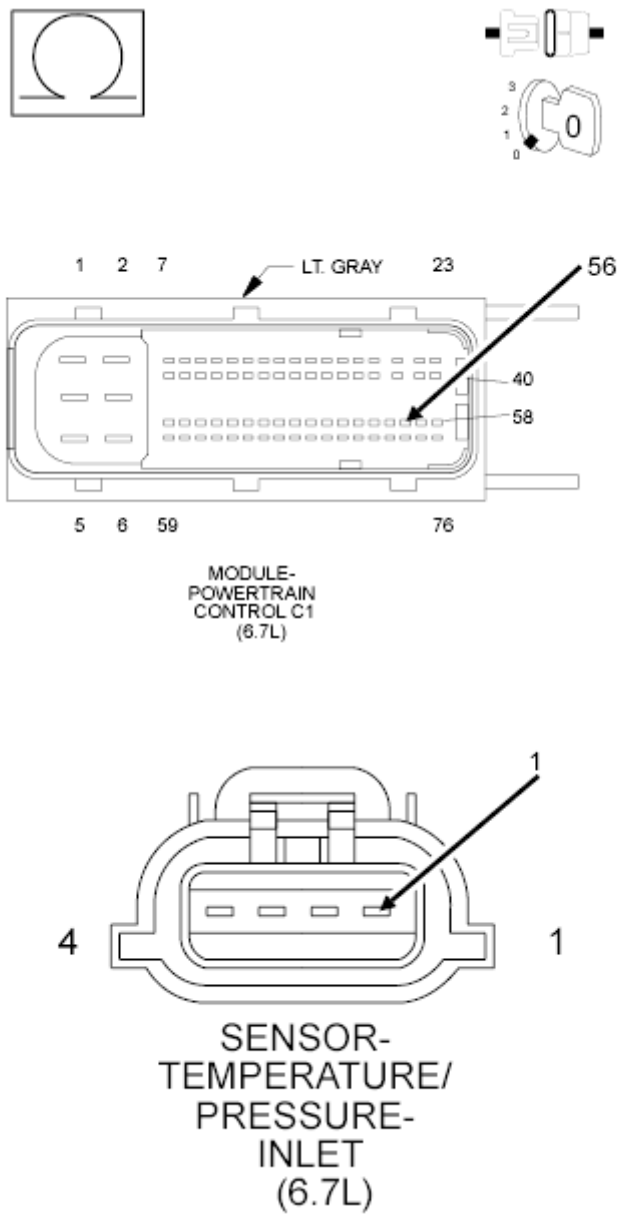

Fig. 13: Checking Inlet Air Pressure Signal Circuit For Open Or High Resistance
Courtesy of CHRYSLER GROUP, LLC

1. Disconnect the PCM C1 harness connector.
2. Measure the resistance of the (K616) Inlet Air Pressure Signal circuit between the PCM C1 harness connector and the Inlet Air Temperature/Pressure harness connector.

   Is the resistance below 5.0 Ohms?

   Yes

   - Go To 6.

No

- Repair the (K616) Inlet Air Pressure Signal circuit for an open or high resistance.
- Perform the POWERTRAIN VERIFICATION TEST. Refer to **POWERTRAIN VERIFICATION TEST - 6.7L** .

6. **CHECK THE INLET TEMPERATURE/PRESSURE SENSOR**
   1. Reconnect the PCM C1 harness connector.
   2. Turn the ignition on.
   3. While monitoring the scan tool, use a jumper to connect the (F855) 5-Volt Supply circuit to the (K616) Inlet Air Pressure Signal circuit at the Inlet Air Temperature/Pressure Sensor harness connector.

   Does the scan tool display DTC P2229 active?

   Yes

   - Replace the Inlet Temperature/Pressure Sensor.
   - Perform the POWERTRAIN VERIFICATION TEST. Refer to **POWERTRAIN VERIFICATION TEST - 6.7L** .

   No

   - Replace the Powertrain Control Module in accordance with the service information.
   - Perform the POWERTRAIN VERIFICATION TEST. Refer to **POWERTRAIN VERIFICATION TEST - 6.7L** .

P2229-BAROMETRIC PRESSURE CIRCUIT HIGH

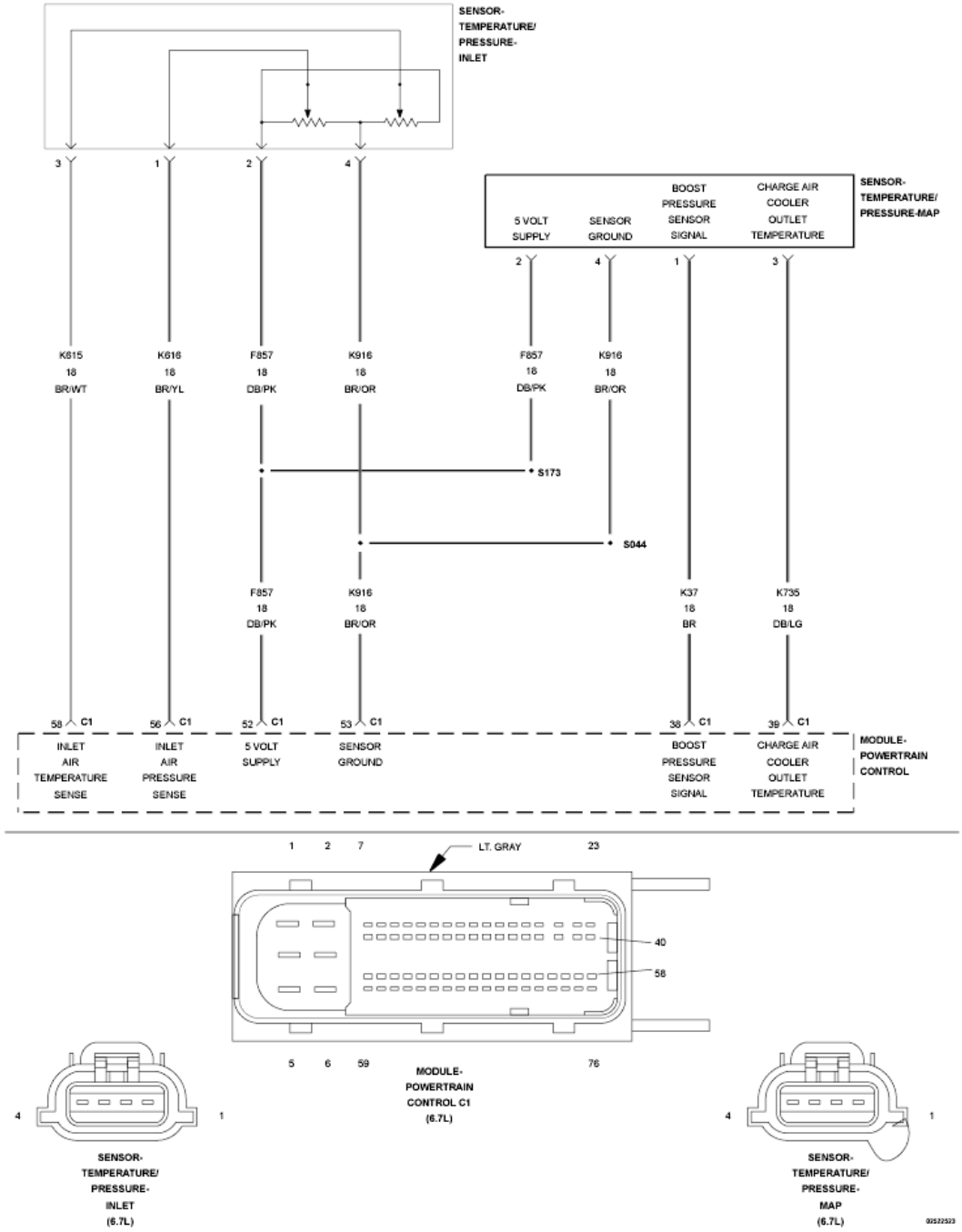

Fig. 14: Inlet Air Temperature Sensor Circuit Schematic
Courtesy of CHRYSLER GROUP, LLC

For a complete wiring diagram, **refer to appropriate SYSTEM WIRING DIAGRAMS article** .

THEORY OF OPERATION

The barometric pressure is measured by the Inlet Air Temperature/Pressure Sensor, which is located on the Air Cleaner Assembly. There is a key on check and a rationality check. At key on, the readings for the Intake Manifold Pressure Sensor, Exhaust Gas Pressure Sensor, and Inlet Air Pressure Sensor are compared. This fault

code occurs if the inlet air pressure reading is different from the other two. During normal engine operation the rationality check verifies the inlet air pressure is reading an unreasonable value for a calibrated period of time then an error is recorded. The key-on portion of the rationality will light the MIL immediately after the diagnostic runs and fails. The rationality portion is a one trip fault. During this time the Powertrain Control Module (PCM) uses an estimated barometric pressure. The PCM turns off the MIL when the diagnostic runs and passes in four consecutive drive cycles.

WHEN MONITORED:

Any time the PCM is powered up.

SET CONDITION:

The circuit voltage to the Powertrain Control Module (PCM) is above 4.85 Volts for one second.

POSSIBLE CAUSES

Possible Causes
(K616) INLET AIR PRESSURE SIGNAL CIRCUIT SHORTED TO VOLTAGE
(F857) 5-VOLT SUPPLY CIRCUIT SHORTED TO VOLTAGE
(K616) INLET AIR PRESSURE SIGNAL CIRCUIT SHORTED TO THE (F855) 5-VOLT SUPPLY
(K916) SENSOR GROUND CIRCUIT OPEN/HIGH RESISTANCE
INLET TEMPERATURE/PRESSURE SENSOR
POWERTRAIN CONTROL MODULE (PCM)

Always perform the Pre-Diagnostic Troubleshooting procedure before proceeding. Refer to PRE-DIAGNOSTIC TROUBLESHOOTING PROCEDURE - 6.7L .

DIAGNOSTIC TEST

1. **ACTIVE DTC**

   NOTE: If there are any 5-Volt supply DTCs present, repair those DTCs before proceeding.

   1. Turn the ignition on.
   2. With the scan tool, record all Freeze frame data.
   3. With the scan tool, erase DTCs.
   4. Turn the ignition off for 75 seconds.
   5. Turn the ignition on.
   6. With the scan tool, read DTCs.

   Did the DTC reset?

   Yes

- Go To 2.

No

- Perform the INTERMITTENT CONDITION diagnostic procedure. Refer to **INTERMITTENT CONDITION - 6.7L** .

2. **CHECK THE (K616) INLET AIR PRESSURE SIGNAL CIRCUIT FOR A SHORT TO VOLTAGE**

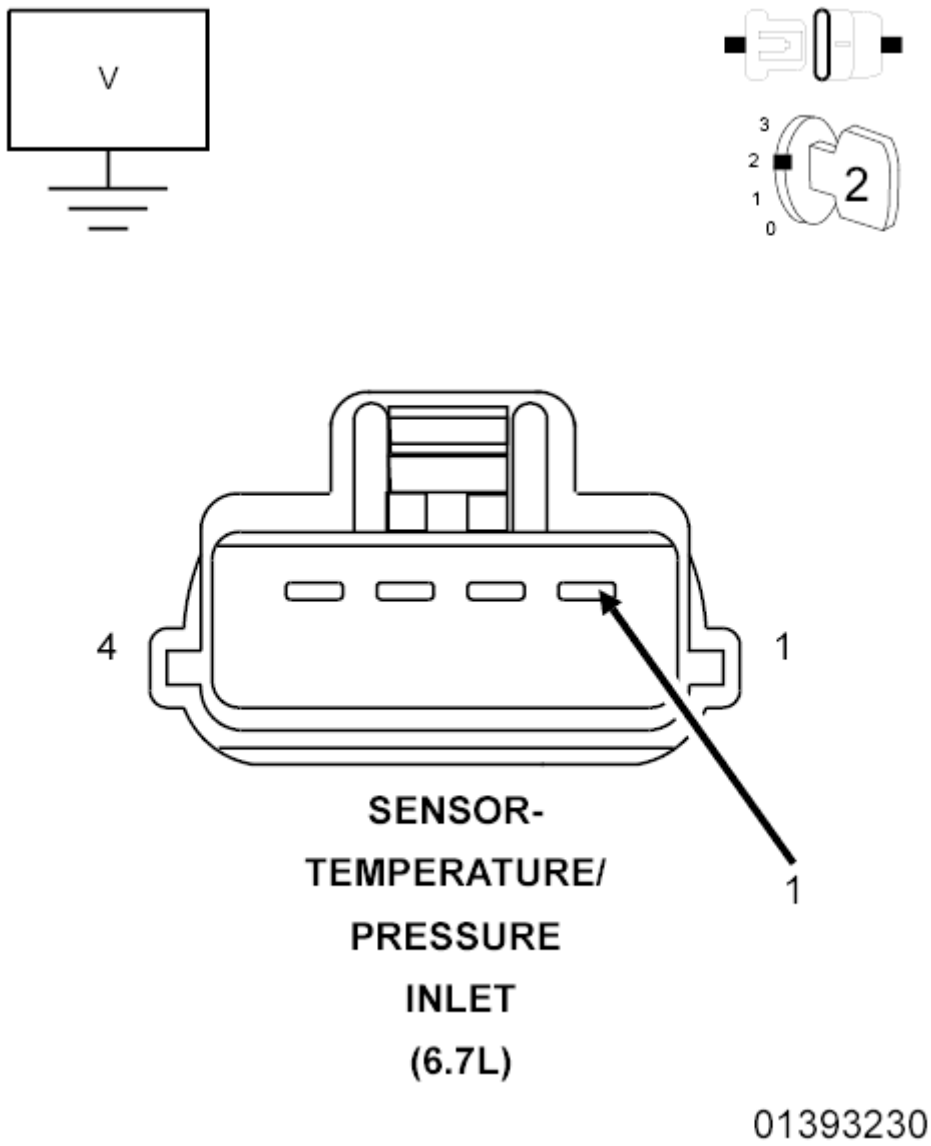

Fig. 15: Checking Inlet Air Pressure Signal Circuit For Short To Voltage
Courtesy of CHRYSLER GROUP, LLC

1. Turn the ignition off.
2. Disconnect the Inlet Air Temperature/Pressure Sensor harness connector.

NOTE: Check connectors - Clean/repair as necessary.

3. Turn the ignition on.
4. Measure the voltage on the (K616) Inlet Air Pressure Signal circuit at the Inlet Temperature/Pressure Sensor harness connector.

   Is the voltage above 5.1 Volts?

   Yes

   - Repair the (K616) Inlet Air Pressure Signal circuit for a short to voltage.
   - Perform the POWERTRAIN VERIFICATION TEST. Refer to **POWERTRAIN VERIFICATION TEST - 6.7L** .

   No

   - Go To 3.

3. **CHECK FOR THE (K616) INLET AIR PRESSURE SIGNAL CIRCUIT SHORTED TO THE (F855) 5-VOLT SUPPLY**

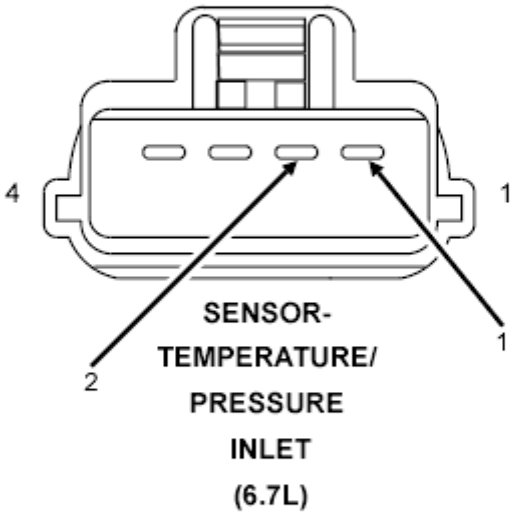

01393265

Fig. 16: Checking Inlet Air Pressure Signal Circuit For Short To 5-Volt Supply
Courtesy of CHRYSLER GROUP, LLC

1. Turn the ignition off.
2. Disconnect the PCM C1 harness connector.
3. Measure the resistance between the (K616) Inlet Air Pressure Signal circuit and the (F855) 5-Volt Supply circuit at the Inlet Air Temperature/Pressure Sensor harness connector.

   Is the resistance below 10k Ohms?

   Yes

- Repair the short between the (K616) Inlet Air Pressure Signal circuit and the (F855) 5-Volt Supply circuit.
- Perform the POWERTRAIN VERIFICATION TEST. Refer to **POWERTRAIN VERIFICATION TEST - 6.7L** .

No

- Go To 4.

4. **CHECK THE (K916) SENSOR GROUND CIRCUIT OPEN/HIGH RESISTANCE**

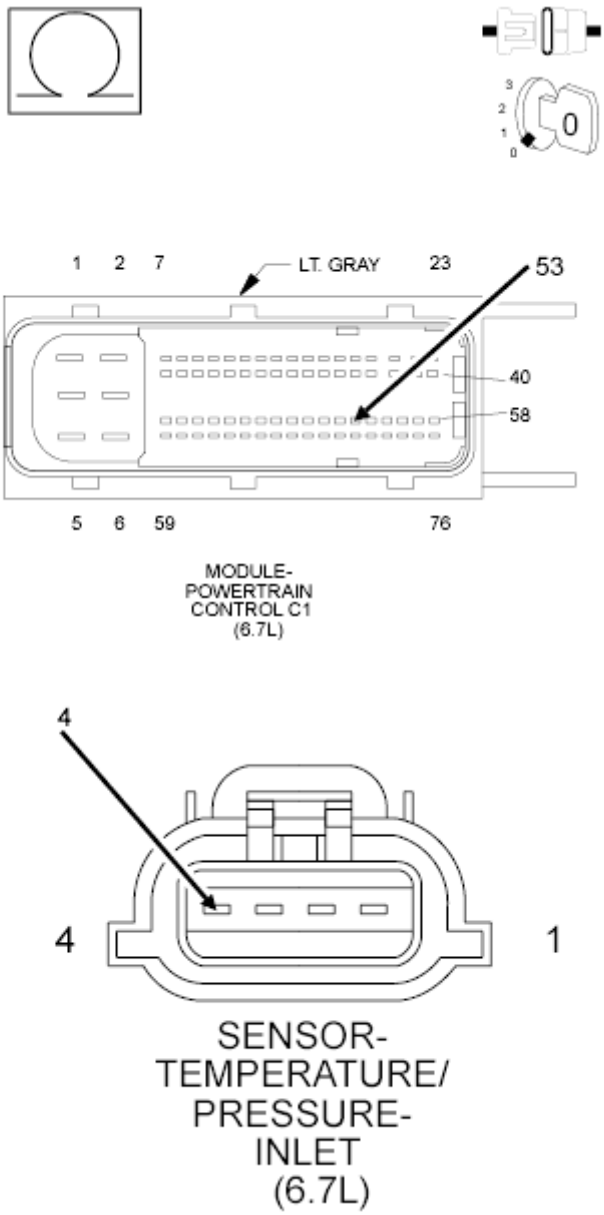

Fig. 17: Checking Inlet Air Temperature Sensor Ground Circuit For An Open Or High Resistance
Courtesy of CHRYSLER GROUP, LLC

1. Measure the resistance of the (K916) Sensor Ground circuit from the Inlet Temperature/Pressure Sensor harness connector to the PCM C1 harness connector.

   Is the resistance below 5.0 Ohms?

   Yes

   - Go To 5.

   No

   - Repair the (K916) Sensor Ground circuit for an open or high resistance.
   - Perform the POWERTRAIN VERIFICATION TEST. Refer to **POWERTRAIN VERIFICATION TEST - 6.7L** .

5. **CHECK THE INLET TEMPERATURE/PRESSURE SENSOR**
   1. Reconnect the PCM C1 harness connector.
   2. Reconnect the Inlet Temperature/Pressure Sensor harness connector.
   3. With the scan tool, erase DTCs.
   4. Turn the ignition off for 75 seconds.
   5. Turn the ignition on.
   6. While monitoring the scan tool, disconnect the Inlet Temperature/Pressure Sensor harness connector.

      Does DTC P2228 Barometric Pressure Sensor Low become active.

      Yes

      - Replace the Inlet Temperature/Pressure Sensor in accordance with the service information.
      - Perform the POWERTRAIN VERIFICATION TEST. Refer to **POWERTRAIN VERIFICATION TEST - 6.7L** .

      No

      - Replace and program the Powertrain Control Module in accordance with the service information. Refer to **PCM - REMOVAL** , also see **PCM/ECM / TCM PROGRAMMING** .
      - Perform the POWERTRAIN VERIFICATION TEST. Refer to **POWERTRAIN VERIFICATION TEST - 6.7L** .

P2262-TURBOCHARGER BOOST PRESSURE NOT DETECTED - MECHANICAL

For a complete wiring diagram, **refer to appropriate SYSTEM WIRING DIAGRAMS article** .

THEORY OF OPERATION

The Variable Geometry Turbocharger (VGT) is electronically activated by the Powertrain Turbo Actuator. The Electronic Turbo Actuator is a smart device and receives information via the J1939 BUS from the Powertrain Control Module (PCM). The Electronic Turbo Actuator performs its own diagnostics and reports failures back to the PCM using the J1939 BUS. The PCM then decodes the error message and converts it to a fault code. A mobile desoot should not be performed while investigating this fault. The PCM lights the MIL lamp immediately after the diagnostic runs and fails. The PCM will turn off the MIL lamp immediately after this diagnostic runs and passes in four consecutive drive cycles.

WHEN MONITORED:

Continuously with ignition on.

SET CONDITION:

The commanded position and the actual position do not match over a calibrated time.

POSSIBLE CAUSES

Possible Causes
ELECTRONIC TURBO ACTUATOR
TURBOCHARGER

Always perform the Pre-Diagnostic Troubleshooting procedure before proceeding. Refer to PRE-DIAGNOSTIC TROUBLESHOOTING PROCEDURE - 6.7L .

DIAGNOSTIC TEST

1. **INTERMITTENT CONNECTION**
    1. Turn ignition off.
    2. Disconnect the Electronic Turbo Actuator harness connector.

    NOTE: Check connectors - Clean/repair as necessary.

    Are any pins or damage done to the connector?

    Yes

    - Repair/replace harness.
    - Perform the POWERTRAIN VERIFICATION TEST. Refer to **POWERTRAIN VERIFICATION TEST - 6.7L** .

    No

    - Go To 2.
2. **ELECTRONIC TURBO ACTUATOR**

NOTE: **It is important to drain engine coolant before Electronic Turbo Actuator removal.**

1. Remove the Electronic Turbo Actuator from the turbocharger.
2. Inspect Electronic Turbo Actuator for a broken drive gear.

   Is the VGT actuator drive gear broken/damaged?

   Yes

   - Replace the Electronic Turbo Actuator in accordance with the service information.
   - Perform the POWERTRAIN VERIFICATION TEST. Refer to **POWERTRAIN VERIFICATION TEST - 6.7L** .

   No

   - Go To 3.

3. **TURBOCHARGER**
   1. Inspect the sector gear on the turbocharger for damage or broken teeth.
   2. Move the sector gear lever on the turbocharger bearing housing up and down from stop to stop.
   3. Check for smooth movement between the stops.

      NOTE: **The actuator lever must move evenly and crisply as it is moved.**

      Does the nozzle slide evenly from stop to stop and are the gear teeth undamaged?

      Yes

      - Replace the Electronic Turbo Actuator in accordance with the service information.
      - Perform the POWERTRAIN VERIFICATION TEST. Refer to **POWERTRAIN VERIFICATION TEST - 6.7L** .

      No

      - Replace the Turbocharger assembly in accordance with the service information.
      - Perform the POWERTRAIN VERIFICATION TEST. Refer to **POWERTRAIN VERIFICATION TEST - 6.7L** .

P2266-WATER IN FUEL SENSOR CIRCUIT LOW

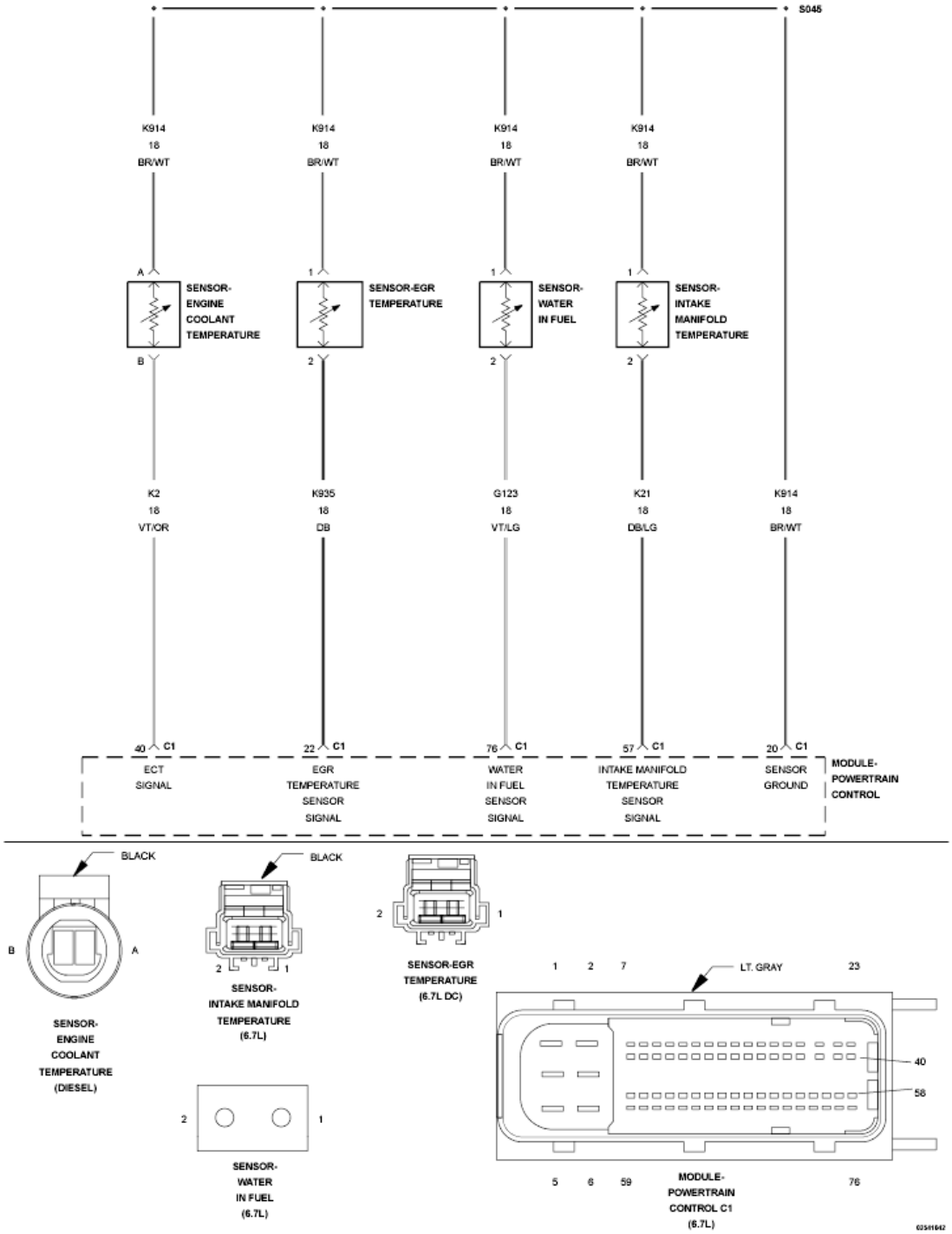

Fig. 18: Intake Manifold Temp, Engine Coolant Temp, EGR Temp, & Water In Fuel Sensor Circuit Schematic
Courtesy of CHRYSLER GROUP, LLC

For a complete wiring diagram, **refer to appropriate SYSTEM WIRING DIAGRAMS article** .

THEORY OF OPERATION

The Water-In-Fuel (WIF) sensor is attached to the fuel filter. The Powertrain Control Module (PCM) provides a 5-Volt reference signal to the water in fuel sensor. When the water collected in the fuel filter covers the sensor probes, the Water-In-Fuel sensor then pulls the 5-Volt reference voltage low indicating high water accumulation in the fuel filter.

WHEN MONITORED:

Ignition on.

SET CONDITION:

Low voltage detected at the WIF signal circuit at the Powertrain Control Module (PCM).

POSSIBLE CAUSES

Possible Causes
WATER IN FUEL SENSOR
(G123) WIF SIGNAL CIRCUIT SHORTED TO GROUND
(G123) WIF SIGNAL CIRCUIT SHORTED TO THE (K914) SENSOR GROUND CIRCUIT
POWERTRAIN CONTROL MODULE (PCM)

Always perform the Pre-Diagnostic Troubleshooting procedure before proceeding. Refer to PRE-DIAGNOSTIC TROUBLESHOOTING PROCEDURE - 6.7L .

DIAGNOSTIC TEST

1. **WATER IN FUEL SENSOR**
    1. Turn the ignition off.
    2. Disconnect the Water in Fuel Sensor harness connector.
    3. Ignition on, engine not running.

    NOTE: Check connectors - Clean/repair as necessary.

    4. Measure the voltage between the (G123) Water in Fuel Signal circuit and the (K914) Sensor ground circuit of the WIF Sensor harness connector.

    Is the voltage between 4.5 and 5.5 Volts?

    Yes

    - Replace the Water in Fuel Sensor in accordance with the service information.
    - Perform the POWERTRAIN VERIFICATION TEST. Refer to **POWERTRAIN VERIFICATION TEST - 6.7L** .

    No

- Go To 2.

2. **CHECK FOR THE (G123) WIF SIGNAL CIRCUIT SHORTED TO (K914) SENSOR GROUND CIRCUIT**
   1. Disconnect the PCM C1 harness connector.

      NOTE: Check connectors - Clean/repair as necessary.

   2. Measure the resistance between the (G123) WIF Sensor Signal circuit and the (K914) Sensor Ground circuit of the WIF Sensor harness connector.

      Is the resistance below 10k Ohms?

      Yes

      - Repair the short between the (G123) WIF Sensor Signal circuit and the (K914) Sensor Ground circuit.
      - Perform the POWERTRAIN VERIFICATION TEST. Refer to **POWERTRAIN VERIFICATION TEST - 6.7L** .

      No

      - Go To 3.

3. **CHECK THE (G123) WIF SENSOR SIGNAL CIRCUIT FOR A SHORT TO GROUND**
   1. Measure the resistance between ground and the (G123) WIF Sensor Signal circuit at the WIF Sensor harness connector.

      Is the resistance below 10k Ohms?

      Yes

      - Repair the (G123) WIF Sensor Signal for a short to ground.
      - Perform the POWERTRAIN VERIFICATION TEST. Refer to **POWERTRAIN VERIFICATION TEST - 6.7L** .

      No

      - Replace and program the Powertrain Control Module in accordance with the service information. Refer to **PCM - REMOVAL** , also see **PCM/ECM / TCM PROGRAMMING** .
      - Perform the POWERTRAIN VERIFICATION TEST. Refer to **POWERTRAIN VERIFICATION TEST - 6.7L** .

P2267-WATER IN FUEL SENSOR CIRCUIT HIGH

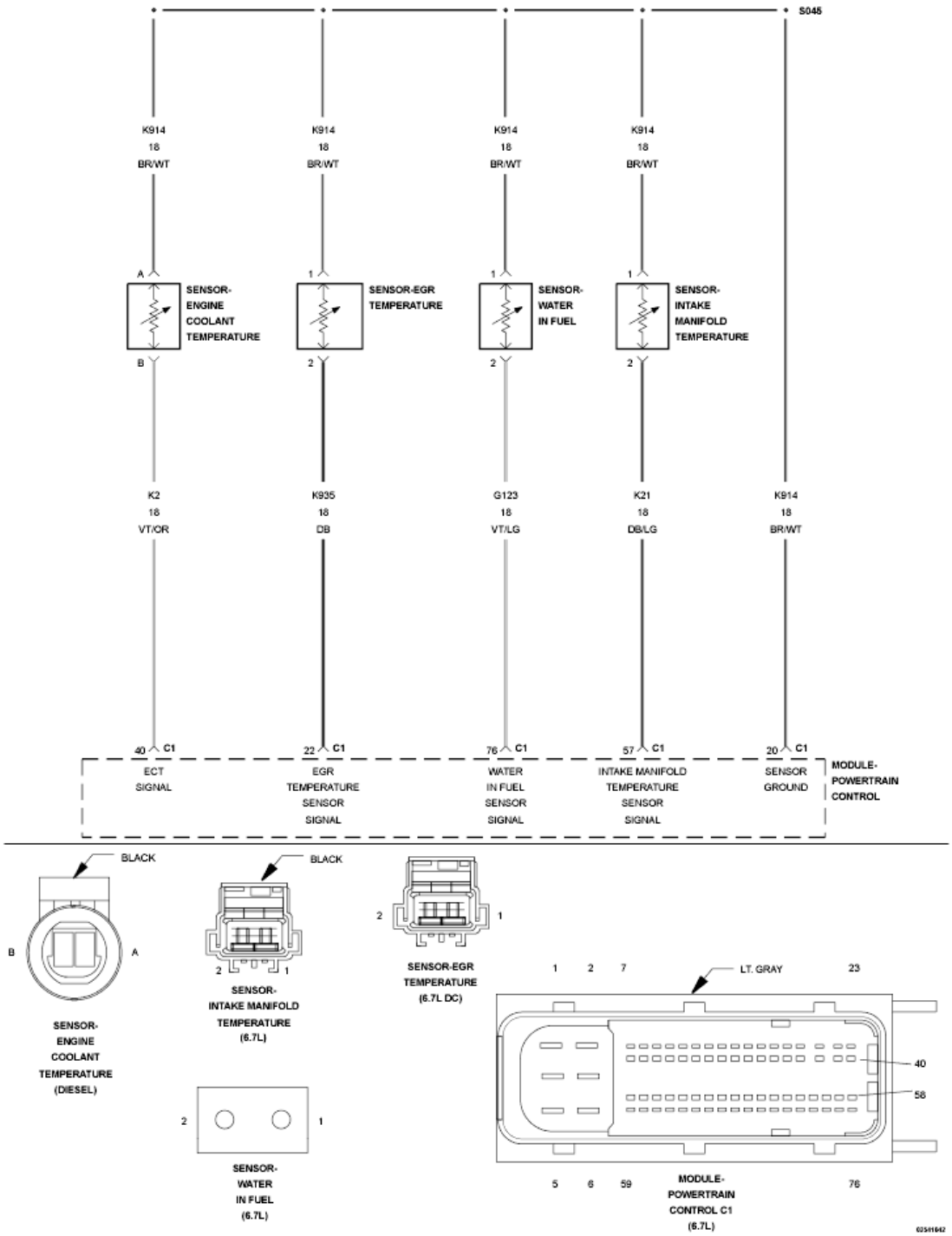

Fig. 19: Intake Manifold Temp, Engine Coolant Temp, EGR Temp, & Water In Fuel Sensor Circuit Schematic
Courtesy of CHRYSLER GROUP, LLC

For a complete wiring diagram, **refer to appropriate SYSTEM WIRING DIAGRAMS article** .

THEORY OF OPERATION

The Water-In-Fuel (WIF) sensor is attached to the bottom of the fuel filter. The Powertrain Control Module (PCM) provides a 5-Volt reference signal to the Water-In-Fuel sensor. When the water collected in the fuel filter covers the sensor probes, the Water-In-Fuel sensor then pulls the 5-Volt reference voltage low indicating high water accumulation in the fuel filter. The PCM illuminates the Water In Fuel lamp immediately after the diagnostic runs and fails. During this time water in fuel may cause white smoke, loss of power or hard starting. The Water In Fuel lamp will turn off once the water is drained from the filter.

WHEN MONITORED:

Ignition on.

SET CONDITION:

High voltage detected at the WIF Signal Circuit at the Powertrain Control Module (PCM).

POSSIBLE CAUSES

Possible Causes
(G123) WIF SIGNAL CIRCUIT SHORTED TO VOLTAGE (G123) WIF SIGNAL CIRCUIT OPEN/HIGH RESISTANCE
(K914) SENSOR GROUND CIRCUIT OPEN/HIGH RESISTANCE
WATER IN FUEL SENSOR POWERTRAIN CONTROL MODULE (PCM)

Always perform the Pre-Diagnostic Troubleshooting procedure before proceeding. Refer to PRE-DIAGNOSTIC TROUBLESHOOTING PROCEDURE - 6.7L .

DIAGNOSTIC TEST

1. **ACTIVE DTC**
    1. With the scan tool, read DTCs.

       Is the DTC active at this time?

       Yes

       - Go To 2.

       No

       - Perform the INTERMITTENT CONDITION diagnostic procedure. Refer to **INTERMITTENT CONDITION - 6.7L** .
2. **WATER IN FUEL SENSOR**
    1. Turn the ignition off.
    2. Disconnect the Water in Fuel Sensor.
    3. Turn the ignition on.

4. Using a scan tool monitor the Water in Fuel Sensor voltage.
5. Connect a jumper wire between the (G123) WIF Signal circuit and the (K914) Sensor ground circuit.

   Did the voltage display 5.0 Volts with the connector disconnected and drop close to 0 Volts when the jumper wire was installed?

   Yes

   - Replace the Water in Fuel Sensor in accordance with the service information.
   - Perform the POWERTRAIN VERIFICATION TEST. Refer to **POWERTRAIN VERIFICATION TEST - 6.7L** .

   No

   - Go To 3.

3. **CHECK THE (G123) WATER IN FUEL SENSOR FOR A SHORT TO VOLTAGE**
   1. Turn the ignition off.
   2. Disconnect the C1 PCM harness connector.
   3. Turn the ignition on.
   4. Measure the voltage on the (G123) WIF Signal circuit at the Water in Fuel Sensor harness connector.

      Is there any voltage present?

      Yes

      - Repair the (G123) WIF Signal circuit for a short to voltage.
      - Perform the POWERTRAIN VERIFICATION TEST. Refer to **POWERTRAIN VERIFICATION TEST - 6.7L** .

      No

      - Go To 4.

4. **CHECK THE (G123) WIF SIGNAL CIRCUIT FOR AN OPEN/HIGH RESISTANCE**
   1. Turn the ignition off.
   2. Measure the resistance on the (G123) WIF Signal circuit from the Water in Fuel Sensor harness connector to the C1 PCM harness connector.

      Is the resistance greater than 5.0 Ohms?

      Yes

      - Repair the (G123) WIF Signal circuit for an open or high resistance.

- Perform the POWERTRAIN VERIFICATION TEST. Refer to **POWERTRAIN VERIFICATION TEST - 6.7L** .

No

- Go To 5.

5. **CHECK THE (K914) SENSOR GROUND CIRCUIT FOR AN OPEN/HIGH RESISTANCE**
   1. Measure the resistance on the (K914) Sensor ground circuit from the Water in Fuel Sensor harness connector to the C1 PCM harness connector.

      Is the resistance greater than 5.0 Ohms?

      Yes

      - Repair the (K914) Sensor ground circuit for an open or high resistance.
      - Perform the POWERTRAIN VERIFICATION TEST. Refer to **POWERTRAIN VERIFICATION TEST - 6.7L** .

      No

      - Replace the Powertrain Control Module in accordance with the service information.
      - Perform the POWERTRAIN VERIFICATION TEST. Refer to **POWERTRAIN VERIFICATION TEST - 6.7L** .

P2269-WATER IN FUEL CONDITION

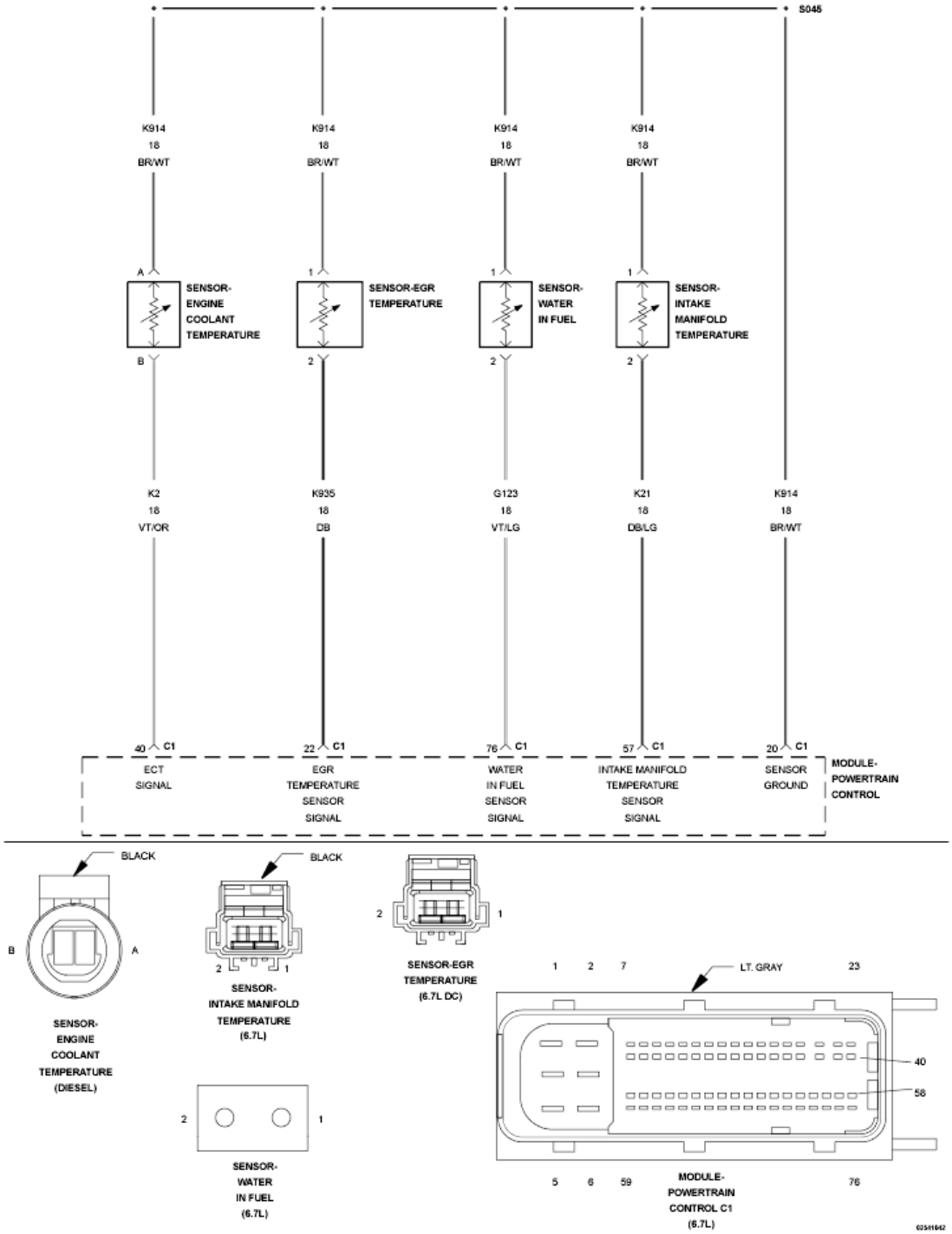

Fig. 20: Intake Manifold Temp, Engine Coolant Temp, EGR Temp, & Water In Fuel Sensor Circuit Schematic
Courtesy of CHRYSLER GROUP, LLC

For a complete wiring diagram, **refer to appropriate SYSTEM WIRING DIAGRAMS article** .

THEORY OF OPERATION

The Water-In-Fuel (WIF) sensor is attached to the fuel filter. The Powertrain Control Module (PCM) provides a 5-Volt reference signal to the water in fuel sensor. When the water collected in the fuel filter covers the sensor probes, the Water-In-Fuel sensor then pulls the 5-Volt reference voltage low indicating high water accumulation in the fuel filter.

WHEN MONITORED:

Any time the PCM is powered up.

SET CONDITION:

Water in fuel indicated from the WIF Sensor.

POSSIBLE CAUSES

Possible Causes
WATER IN FUEL WATER-IN-FUEL SENSOR
(G123) WIF SENSOR SIGNAL CIRCUIT SHORTED TO GROUND
POWERTRAIN CONTROL MODULE (PCM)

Always perform the Pre-Diagnostic Troubleshooting procedure before proceeding. Refer to PRE-DIAGNOSTIC TROUBLESHOOTING PROCEDURE - 6.7L .

DIAGNOSTIC TEST

1. **OTHER DTCS PRESENT**
    1. With the scan tool, read DTCs.

       Do you have any additional water in fuel DTCs?

       Yes

       - Repair other Water in fuel sensor DTCs first.
       - Perform the POWERTRAIN VERIFICATION TEST. Refer to **POWERTRAIN VERIFICATION TEST - 6.7L** .

       No

       - Go To 2.
2. **WATER IN FUEL**
    1. Turn the ignition off.
    2. Using the service publications as a guide, drain the water in fuel separator.

       Did the DTC become inactive after draining the water in fuel separator?

Yes

- Clear DTC, repair complete.
- Perform the POWERTRAIN VERIFICATION TEST. Refer to **POWERTRAIN VERIFICATION TEST - 6.7L** .

No

- Go To 3.

3. **CHECK THE WATER-IN-FUEL SENSOR**
   1. Disconnect the WIF Sensor harness connector.

      NOTE: Check connectors - Clean/repair as necessary.

   2. Turn the ignition on.
   3. Using the scan tool, read DTCs.

      Did DTC P2269 become active?

      Yes

      - Replace the Water-In-Fuel Sensor in accordance with the service information.
      - Perform the POWERTRAIN VERIFICATION TEST. Refer to **POWERTRAIN VERIFICATION TEST - 6.7L** .

      No

      - Go To 4.

4. **CHECK THE (G123) WIF SENSOR SIGNAL CIRCUIT FOR A SHORT TO GROUND**
   1. Turn the ignition off.
   2. Disconnect the PCM C1 harness connector.

      NOTE: Check connectors - Clean/repair as necessary.

   3. Measure the resistance between ground and the (G123) WIF Sensor Signal circuit at the WIF Sensor harness connector.

      Is the resistance below 10k Ohms?

      Yes

      - Repair the (G123) WIF Sensor Signal circuit for a short to ground.
      - Perform the POWERTRAIN VERIFICATION TEST. Refer to **POWERTRAIN VERIFICATION TEST - 6.7L** .

No

- Replace and program the Powertrain Control Module in accordance with the service information. Refer to **PCM - REMOVAL** , also see **PCM/ECM / TCM PROGRAMMING** .
- Perform the POWERTRAIN VERIFICATION TEST. Refer to **POWERTRAIN VERIFICATION TEST - 6.7L** .

P226B-TURBOCHARGER BOOST PRESSURE NOT RESPONDING

For a complete wiring diagram, **refer to appropriate SYSTEM WIRING DIAGRAMS article** .

THEORY OF OPERATION

The Variable Geometry Turbocharger (VGT) adjusts turbocharger performance by moving the position of the impeller nozzle, on the high-pressure (engine exhaust gas) side of the turbocharger assembly. Desired position of the actuator is commanded from the Powertrain Control Module (PCM). Actual position is sensed by the VGT, and reported back to the PCM as feedback. Discrepancy in position feedback sent to the module, and commanded position sent to the VGT by more than a prescribed amount will result in failure of device rationality diagnostics. Failure to properly actuate the VGT will result in poor engine performance. The PCM lights the MIL lamp after the diagnostic runs and fails in two drive cycles. The PCM will turn off the MIL lamp immediately after this diagnostic runs and passes in four consecutive drive cycles.

WHEN MONITORED:

When the engine is in regeneration of the aftertreatment system.

SET CONDITION:

Turbo position is not within the commanded position during desoot or the difference between charge flow and charge flow command is over the calibrated limit.

POSSIBLE CAUSES

Possible Causes
SOOT BUILD UP ON TURBOCHARGER
TURBOCHARGER ASSEMBLY

Always perform the Pre-Diagnostic Troubleshooting procedure before proceeding. Refer to PRE-DIAGNOSTIC TROUBLESHOOTING PROCEDURE - 6.7L .

NOTE: **If there are DTCs present with P2262, P226B, P226C, or P2563, address P2262, P226B, P226C, or P2563 before attempting to repair the other fault codes. If however, these DTCs are accompanied by DTC P0471, both DTCs should be addressed and repaired.**

DIAGNOSTIC TEST

1. **VEHICLE CONFIGURATION**
    1. The repair procedure is different depending on whether the vehicle is a Pick Up or Chassis Cab.

       Is the vehicle a Pick Up or Chassis Cab?

       Pick Up

       - Go To 2.

       Chassis Cab

       - Go To 4.
2. **OTHER DTCS PRESENT**
    1. Turn ignition on.
    2. With the scan tool, read DTCs.

       Are there any communication DTCs related to the J1939 Data link present?

       Yes

       - Diagnose and repair the communication DTCs before proceeding.
       - Perform the POWERTRAIN VERIFICATION TEST. Refer to **POWERTRAIN VERIFICATION TEST - 6.7L** .

       No

       - Go To 3.
3. **TURBOCHARGER CLEANING**

   NOTE: Do not erase the DTC before attempting to run the VG Turbocharger Cleaning procedure. The procedure can only run if the P2262, P226B, P226C, or P2563 are present (active, pending or stored).

    1. Reconnect the Turbo Actuator harness connector.
    2. Turn ignition on.
    3. With the scan tool, navigate to miscellaneous functions and initialize the VG Turbocharger Cleaning Procedure. Follow the directions on the scan tool completely.

       NOTE: When the procedure is initialized you will see one of two messages on the screen.

       Which message displayed on the tool?

       Turbo does not need to be cleaned;

- The Turbocharger does not need cleaning, or cleaning of the Turbocharger will not fix the stick condition. If DTC P2262, P226B, P226C, or P2563 are **active or pending** , replace the Turbocharger assembly. If the DTC is **stored** , erase the DTC. Perform the DIESEL AFTERTREATMENT VALIDATION - 6.7L procedure. Refer to **DIESEL AFTERTREATMENT VALIDATION- 6.7L** .

The engine must idle at 1, 500 RPM for 5 minutes prior to injecting the cleaner;

- The Turbocharger cleaning has initiated. Fasten the cleaning tool to the vehicle and follow the instructions on the screen completely. After the first attempt at cleaning is completed the test will run again automatically and determine if the Turbocharger has been cleaned. The scan tool can make up to three attempts to clean the Turbocharger before failing it. After the cleaning procedure has finished, the scan tool will display the results. If the scan tool displays VG Turbocharger cleaning was successful, the repair is complete. If the scan tool displays VG Turbocharger cleaning was unsuccessful, replace the Turbocharger assembly in accordance with the service information.
- Perform the DIESEL AFTERTREATMENT VALIDATION - 6.7L procedure. Refer to **DIESEL AFTERTREATMENT VALIDATION- 6.7L** .

4. **OTHER DTCS PRESENT**
   1. Turn ignition on.
   2. With the scan tool, read DTCs.

      Are there any communication DTCs related to the J1939 Data link present?

      Yes

      - Diagnose and repair those DTCs before replacing the Turbocharger assembly.

      No

      - Replace the Turbocharger assembly in accordance with the service information.
      - Perform the DIESEL AFTERTREATMENT VALIDATION - 6.7L procedure. Refer to **DIESEL AFTERTREATMENT VALIDATION- 6.7L** .

P226C-TURBOCHARGER BOOST CONTROL "A" SLOW RESPONSE

For a complete wiring diagram, **refer to appropriate SYSTEM WIRING DIAGRAMS article** .

THEORY OF OPERATION

The Variable Geometry Turbocharger (VGT) adjusts turbocharger performance by moving the position of the impeller nozzle, on the high-pressure (engine exhaust gas) side of the turbocharger assembly. Desired position of the actuator is commanded from the Powertrain Control Module (PCM). Actual position is sensed by the VGT, and reported back to the PCM as feedback. Discrepancy in position feedback sent to the module, and commanded position sent to the VGT by more than a prescribed amount will result in failure of device rationality diagnostics. Failure to properly actuate the VGT will result in poor engine performance. The PCM

lights the MIL lamp after the diagnostic runs and fails in two drive cycles. The PCM will turn off the MIL lamp immediately after this diagnostic runs and passes in four consecutive drive cycles.

WHEN MONITORED:

With the engine running.

SET CONDITION:

The Powertrain Control Module (PCM) detects that the VGT is slow in responding to it's commanded position.

POSSIBLE CAUSES

Possible Causes
TURBOCHARGER BOOST ACTUATOR
TURBOCHARGER

Always perform the Pre-Diagnostic Troubleshooting procedure before proceeding. Refer to PRE-DIAGNOSTIC TROUBLESHOOTING PROCEDURE - 6.7L .

DIAGNOSTIC TEST

1. **OTHER DTCS**
    1. Turn ignition on.
    2. With the scan tool, read DTCs.

       Are there any EGR Airflow Control Valve, Mass Air Flow Sensor, or Intake System leak related DTCs present, repair those DTCs before continuing?

       Yes

       - Repair those DTCs before proceeding.
       - Perform the POWERTRAIN VERIFICATION TEST. Refer to **POWERTRAIN VERIFICATION TEST - 6.7L** .

       No

       - Go To 2.
2. **TURBOCHARGER CLEANING**
    1. Perform the Turbocharger cleaning procedure. Refer to **TURBOCHARGER SYSTEM, CLEANING, 6.7L** .
    2. With the scan tool, erase DTCs.
    3. Turn the ignition off for 75 seconds.
    4. Start the engine and test drive the vehicle.
    5. With the scan tool. read DTCs.

Did DTC P226C return?

Yes

- Replace the Turbocharger in accordance with the service information.
- Perform the DIESEL AFTERTREATMENT VALIDATION - 6.7L procedure. Refer to **DIESEL AFTERTREATMENT VALIDATION- 6.7L** .

No

- Repair complete.
- Perform the DIESEL AFTERTREATMENT VALIDATION - 6.7L procedure. Refer to **DIESEL AFTERTREATMENT VALIDATION- 6.7L** .

P2280-AIR FLOW RESTRICTION / LEAK BETWEEN AIR CLEANER AND MAF

For a complete wiring diagram, **refer to appropriate SYSTEM WIRING DIAGRAMS article** .

THEORY OF OPERATION

This monitor can detect a severe restriction in the Air Filter or the inlet hose to the Airbox. This can cause a reduction in air flow large enough to cause damage to other engine components. This will cause the fault to be set. When this DTC is active, EGR flow is disabled.

WHEN MONITORED:

Continuously with engine running.

SET CONDITION:

The Powertrain Control Module (PCM) detects a rapid decrease in pressure from the Inlet Air Pressure Sensor on the Airbox.

POSSIBLE CAUSES

Possible Causes
DEBRIS BLOCKING THE INLET HOSE
SEVERELY RESTRICTED AIR FILTER

Always perform the Pre-Diagnostic Troubleshooting procedure before proceeding. Refer to PRE-DIAGNOSTIC TROUBLESHOOTING PROCEDURE - 6.7L .

DIAGNOSTIC TEST

1. **VISUAL INSPECTION**
    1. Turn ignition off.

2. Perform a visual inspection of the Inlet hose for debris, such as snow packing or dirt loading blocking the passage.

   Was a restriction found?

   Yes

   - Clean the debris from the passage way. Check and replace the Air Filter if necessary.
   - Perform the POWERTRAIN VERIFICATION TEST. Refer to **POWERTRAIN VERIFICATION TEST - 6.7L** .

   No

   - Replace the Air Filter.
   - Perform the POWERTRAIN VERIFICATION TEST. Refer to **POWERTRAIN VERIFICATION TEST - 6.7L** .

P2281-AIR LEAK BETWEEN MAF AND THROTTLE BODY

For a complete wiring diagram, **refer to appropriate SYSTEM WIRING DIAGRAMS article** .

THEORY OF OPERATION

This monitor can detect a large leak located anywhere between the Turbocharger outlet and the Intake Manifold. The monitor compares the estimated EGR flow to the actual EGR flow. If the actual EGR flow is much less than the estimated EGR flow, the fault will set. If the CAC hose is leaking or disconnected, the Turbocharger can still have enough exhaust flow that the compressor will draw air through the MAF. Charge Flow will be low since the flow is not reaching the Intake Manifold. This will cause the fault to be set.

WHEN MONITORED:

Continuously with engine running.

SET CONDITION:

The Powertrain Control Module (PCM) detects that the actual EGR flow is less than the estimated EGR flow by a calibrated value.

POSSIBLE CAUSES

Possible Causes
LARGE LEAK IN THE INTAKE SYSTEM BETWEEN THE TURBOCHARGER OUTLET AND THE INTAKE MANIFOLD

Always perform the Pre-Diagnostic Troubleshooting procedure before proceeding. Refer to PRE-DIAGNOSTIC TROUBLESHOOTING PROCEDURE - 6.7L .

DIAGNOSTIC TEST

1. **VISUAL INSPECTION**
    1. Turn ignition off.
    2. Perform a visual inspection of the Intake system for disconnected hoses or loose hose clamps between the Turbocharger and the Intake Manifold.

       Were any disconnected hoses or loose clamps found?

       Yes

       - Perform the appropriate repair.
       - Perform the POWERTRAIN VERIFICATION TEST. Refer to **POWERTRAIN VERIFICATION TEST - 6.7L** .

       No

       - Go To 2.
2. **CHECK THE INTAKE SYSTEM**
    1. Perform the INTAKE AIR SYSTEM PRESSURE TEST diagnostic procedure. Refer to **DIAGNOSIS AND TESTING, 6.7L** .

       Were any leaks found?

       Yes

       - Perform the appropriate repair.
       - Perform the POWERTRAIN VERIFICATION TEST. Refer to **POWERTRAIN VERIFICATION TEST - 6.7L** .

       No

       - Perform the INTERMITTENT CONDITION diagnostic procedure. Refer to **INTERMITTENT CONDITION - 6.7L** .

P2299-BRAKE PEDAL POSITION / ACCELERATOR PEDAL POSITION INCOMPATIBLE

For a complete wiring diagram, **refer to appropriate SYSTEM WIRING DIAGRAMS article** .

THEORY OF OPERATION

This diagnostic tests for a stuck throttle or throttle position sensor. The algorithm only runs when detected throttle position is above 8% and maintains a position within 2% for more than two seconds. If the brake pedal is pushed during that time, the diagnostic will fail. This fault will not occur if the brake pedal is applied first and then the throttle pedal is engaged. If this diagnostic runs and fails the Powertrain Control Module (PCM) will light a momentary ETC lamp. The ETC lamp will only be active when the condition exists. While the error is

active the customer will likely experience a throttle derate. The throttle position must be below 8% with both brake switches off in order for this error to reset.

WHEN MONITORED:

Engine running, throttle position maintained above 8% with less than a 2% deviation in two seconds.

SET CONDITION:

Brake pedal is depressed during the monitored conditions.

POSSIBLE CAUSES

Possible Causes
TWO FOOTED DRIVING
ACCELERATOR PEDAL POSITION SENSOR
BRAKE SWITCH
POWERTRAIN CONTROL MODULE (PCM)

Always perform the Pre-Diagnostic Troubleshooting procedure before proceeding. Refer to PRE-DIAGNOSTIC TROUBLESHOOTING PROCEDURE - 6.7L .

DIAGNOSTIC TEST

1. **OTHER DTCS**

   NOTE: The most likely causes of this DTC being set is for the operator of the vehicle to have one foot on the brake while driving or a misadjusted brake switch which is coming on intermittently.

   1. Ignition on, engine not running.
   2. With the scan tool, read DTCs.

      Are there DTCs for the accelerator pedal position sensors or brake switch present?

      Yes

      - Repair those DTCs before proceeding.

      No

      - Go To 2.
2. **PEDAL POSITION SENSOR OR BRAKE SWITCH**
   1. Start the engine.
   2. Use the scan tool to monitor accelerator pedal position.

3. Move throttle through a range of positions.
4. Also depress the brake pedal.
5. Monitor the brake position on the scan tool.

   Does the reported accelerator pedal position and brake position match actual position?

   Yes

   - Go To 3.

   No

   - Troubleshoot accelerator pedal position sensor or brake switch.

3. **TWO FOOTED DRIVING**
   1. Inform the customer that driving the vehicle with both feet can cause this condition.

      Is the owner a two footed driver?

      Yes

      - Repair complete.

      No

      - Go To 4.

4. **BRAKE SWITCH**
   1. Replace the brake switch.
   2. Ignition on, engine not running.
   3. With the scan tool, erase DTCs.
   4. Test drive the vehicle.
   5. With the scan tool, read DTCs.

      Did the DTC reset?

      Yes

      - Replace the Powertrain Control Module in accordance with the service information.
      - Perform the POWERTRAIN VERIFICATION TEST. Refer to **POWERTRAIN VERIFICATION TEST - 6.7L** .

      No

      - Repair complete.
      - Perform the POWERTRAIN VERIFICATION TEST. Refer to **POWERTRAIN**

VERIFICATION TEST - 6.7L .

P229E-AFTERTREATMENT NOX SENSOR CIRCUIT - BANK 1 SENSOR 2

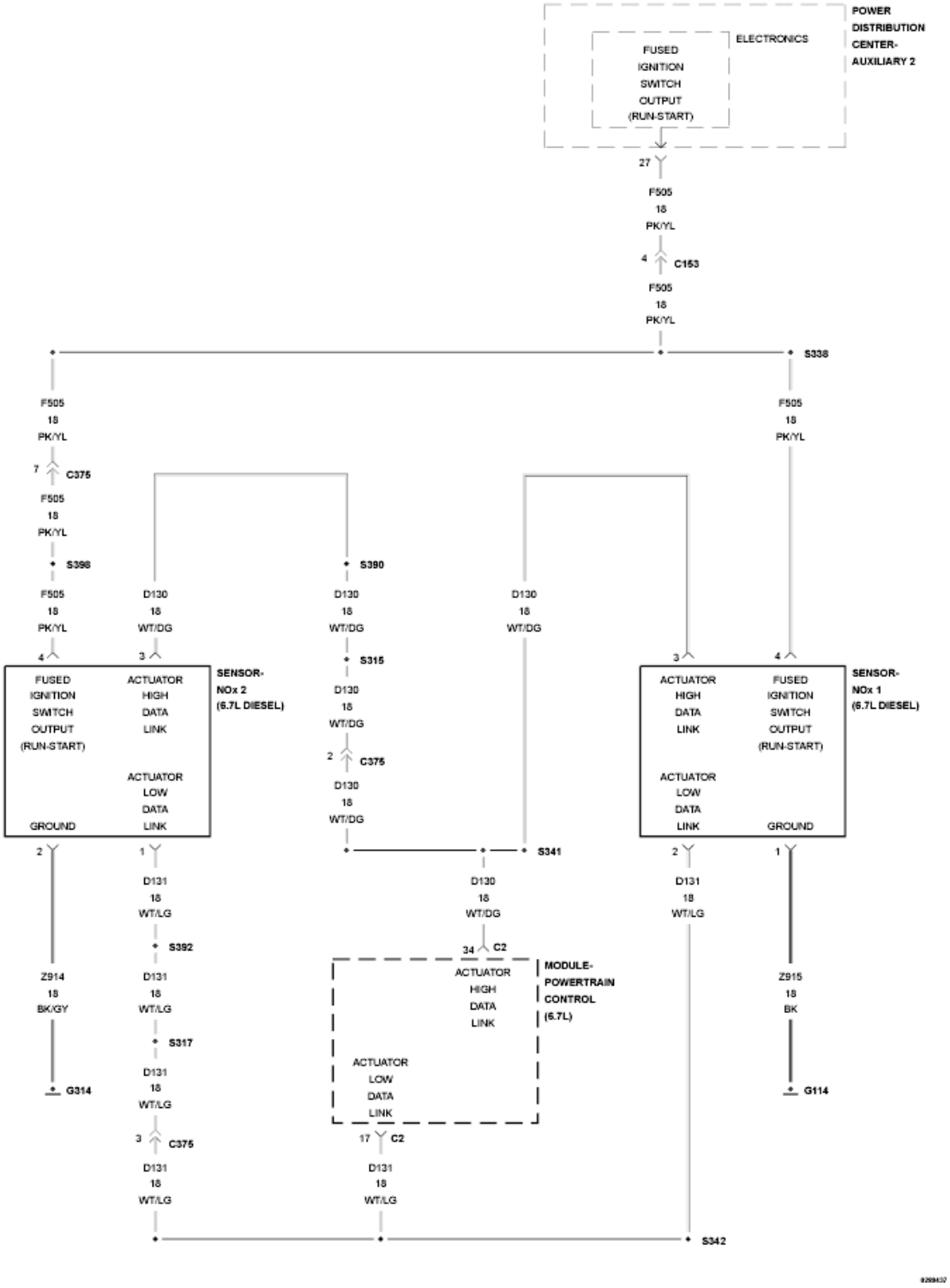

Fig. 21: NOx Sensors Wiring Diagram
Courtesy of CHRYSLER GROUP, LLC

For a complete wiring diagram, **refer to appropriate SYSTEM WIRING DIAGRAMS article** .

THEORY OF OPERATION

The aftertreatment system is equipped with two NOx Sensors and modules. The upstream NOx Sensor 1/1 is located before the SCR Catalyst and is permanently connected to a corresponding NOx Sensor Module mounted on the right frame rail. The downstream NOx Sensor 1/2 is located at the outlet of the SCR Catalyst and is permanently connected to a corresponding NOx Sensor Module also mounted on the right frame rail. The NOx Sensors and NOx Sensor Modules are calibrated to each other and must be replaced as an assembly. The two NOx Sensor and Module assemblies are not interchangeable. The NOx Sensor Modules are smart devices and communicate with the Powertrain Control Module (PCM) over the J1939 Data Link. The NOx Sensor Modules perform their own internal diagnostics and report malfunctions back to the PCM. The NOx Sensors are used to monitor the efficiency of the SCR Catalyst and dosing system. The PCM will illuminate the MIL lamp immediately after the monitor runs and fails. The PCM will turn off the MIL Lamp after the monitor runs and passes for three consecutive trips.

WHEN MONITORED:

Continuously with engine running.

SET CONDITION:

The NOx Sensor 1/2 detects that the voltage supplied is above or below it's calibrated limits.

POSSIBLE CAUSES

Possible Causes
(F505) FUSED IGNITION SWITCH OUTPUT CIRCUIT OPEN/HIGH RESISTANCE
(F505) FUSED IGNITION SWITCH OUTPUT CIRCUIT SHORTED TO GROUND
(Z914) GROUND CIRCUIT OPEN/HIGH RESISTANCE
(F505) FUSED IGNITION SWITCH OUTPUT CIRCUIT SHORTED TO THE (Z914) GROUND CIRCUIT
FAULTY NOx SENSOR 1/2 INTERNAL HEATER
FAULTY NOx SENSOR 1/2

Always perform the Pre-Diagnostic Troubleshooting procedure before proceeding. Refer to PRE-DIAGNOSTIC TROUBLESHOOTING PROCEDURE - 6.7L .

DIAGNOSTIC TEST

1. **ACTIVE DTC**
    1. Turn the ignition on.
    2. With the scan tool, View DTCs.

    Is the DTC active?

Yes

- Go To 3.

No

- Go To 2.

2. **CHECK THE NOx 1/2 SENSOR INTERNAL HEATER**
   1. Start the engine and allow it to idle for at least two minutes.
   2. With the scan tool, View DTCs.

   Is the DTC active?

   Yes

   - The NOx Sensor 1/2 internal heater has malfunctioned. Replace the NOx Sensor 1/2 in accordance with the service information. Refer to **SENSOR, NOX, REMOVAL** .

   No

   - Go To 3.

3. **CHECK THE NOx SENSOR 1/2 POWER AND GROUND CIRCUITS**
   1. Turn the ignition on, engine not running.
   2. Disconnect the NOx Sensor Module 1/2 harness connector.
   3. Measure the voltage across the (F505) Fused Ignition Switch Output circuit and the (Z914) Ground circuit at the NOx Sensor Module 1/2 harness connector.

   NOTE: Measure the voltage at key on, engine cranking, and at idle.

   Does the voltage read within 1.0 Volt of battery voltage?

   Yes

   - Replace the NOx Sensor 1/2 in accordance with the service information. Refer to **SENSOR, NOX, REMOVAL** .
   - Perform the POWERTRAIN VERIFICATION TEST. Refer to **POWERTRAIN VERIFICATION TEST - 6.7L** .

   No

   - Go To 4.

4. **CHECK FOR VOLTAGE AT THE (F505) FUSED IGNITION SWITCH OUTPUT CIRCUIT**
   1. Measure voltage between ground and the (F505) Fused Ignition Switch Output circuit of the NOx Sensor Module 1/2 harness connector.

Does the voltage read within 1.0 Volt of battery voltage?

Yes

- Repair the (Z914) Ground circuit for an open or high resistance.
- Perform the POWERTRAIN VERIFICATION TEST. Refer to **POWERTRAIN VERIFICATION TEST - 6.7L** .

No

- Repair the (F505) Fused Ignition Switch Output circuit for an open or high resistance. If the fuse is found to be open, check the circuit for a short to the (Z914) Ground circuit or a short to chassis ground.
- Perform the POWERTRAIN VERIFICATION TEST. Refer to **POWERTRAIN VERIFICATION TEST - 6.7L** .

P229F-AFTERTREATMENT NOX SENSOR CIRCUIT PERFORMANCE - BANK 1 SENSOR 2

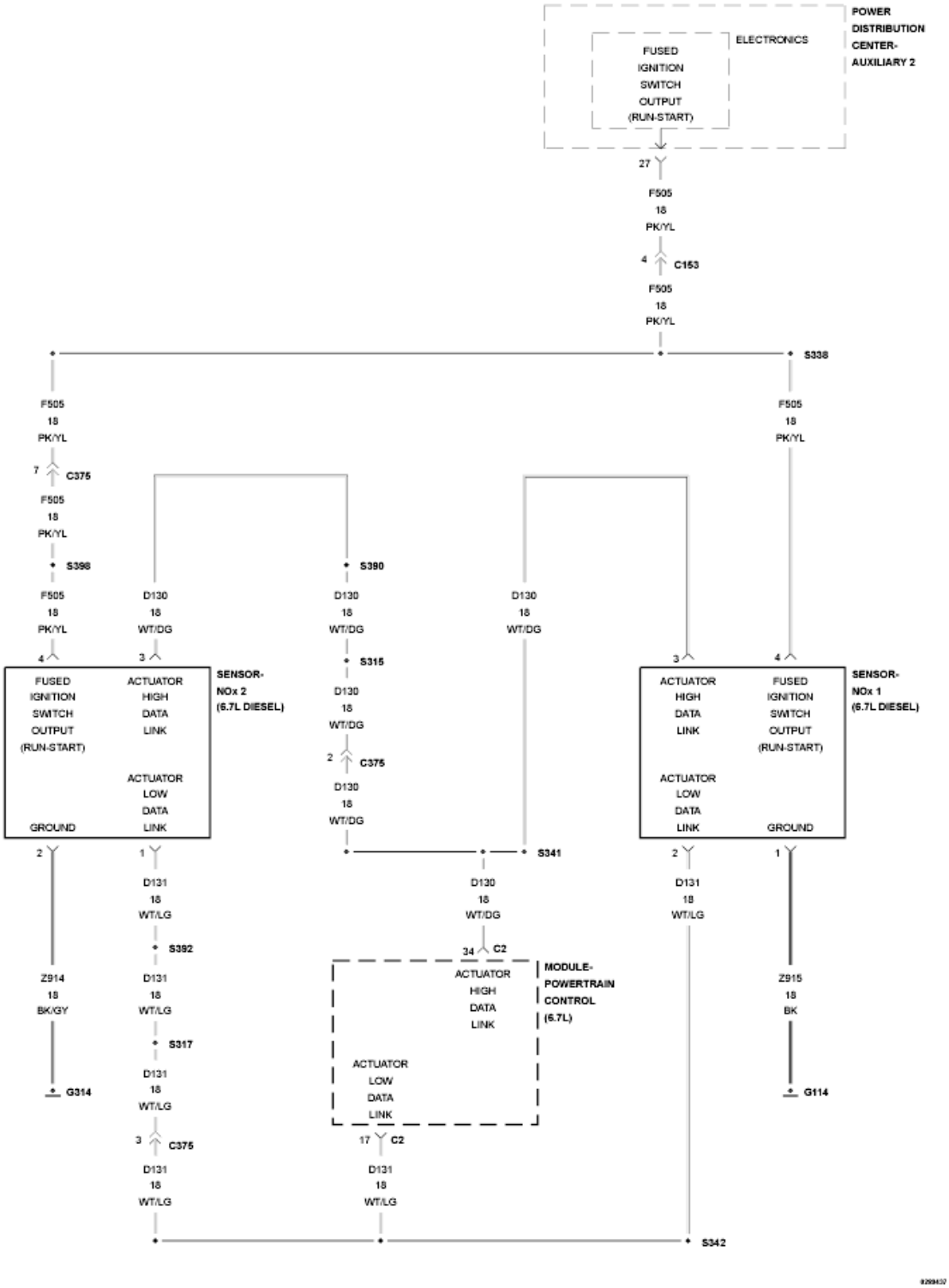

Fig. 22: NOx Sensors Wiring Diagram
Courtesy of CHRYSLER GROUP, LLC

For a complete wiring diagram, **refer to appropriate SYSTEM WIRING DIAGRAMS article** .

THEORY OF OPERATION

The aftertreatment system is equipped with two NOx Sensors and modules. The upstream NOx Sensor 1/1 is located before the SCR Catalyst and is permanently connected to a corresponding NOx Sensor Module mounted on the right frame rail. The downstream NOx Sensor 1/2 is located at the outlet of the SCR Catalyst and is permanently connected to a corresponding NOx Sensor Module also mounted on the right frame rail. The NOx Sensors and NOx Sensor Modules are calibrated to each other and must be replaced as an assembly. The two NOx Sensor and Module assemblies are not interchangeable. The NOx Sensor Modules are smart devices and communicate with the Powertrain Control Module (PCM) over the J1939 Data Link. The NOx Sensor Modules perform their own internal diagnostics and report malfunctions back to the PCM. The NOx Sensors are used to monitor the efficiency of the SCR Catalyst and dosing system. The PCM will illuminate the MIL lamp immediately after the monitor runs and fails. The PCM will turn off the MIL Lamp after the monitor runs and passes for three consecutive trips.

WHEN MONITORED:

This diagnostic monitor consists of two separate checks. The first check occurs when the engine exhaust temperature at NOx Sensor 1/2 is above 150°C (302°F), and the engine is in a decel condition and zero fueling. The second check occurs when the engine exhaust temperature at NOx Sensor 1/2 is above 150°C (302°F), and the calculated NOx value is changing.

SET CONDITION:

The Powertrain Control Module detects that the NOx Sensor 1/2 reading is not reading zero during decel condition and zero fueling for two consecutive trips or the PCM has detected that the NOx Sensor 1/2 reading is not changing with engine conditions for two consecutive trips.

POSSIBLE CAUSES

Possible Causes
ENGINE MISFIRE
EXCESSIVE FUEL OR OIL INTRODUCED INTO THE EXHAUST SYSTEM
FAULTY DEF INJECTOR
DIESEL EXHAUST FLUID CRYSTALLIZATION OR DEPOSITS
NOx SENSOR 1/2 DRIFTED OUT OF RANGE

Always perform the Pre-Diagnostic Troubleshooting procedure before proceeding. Refer to PRE-DIAGNOSTIC TROUBLESHOOTING PROCEDURE - 6.7L .

DIAGNOSTIC TEST

1. **ACTIVE DTC**

NOTE: **If DTCs P220B, P229E, or P22A7 are present, perform the diagnostic for those DTCs before continuing with this test procedure. Refer to P220B, P229E, or P22A7.**

1. Start the engine, monitor Exhaust Gas Temperature Sensor 4 until it reaches 150°C (302°F).

2. Drive the vehicle at 50 MPH, ensure that it is not in DPF Regeneration mode.
3. Perform a zero fueling event (decel condition for 10 seconds, with foot off of accelerator pedal).
4. Repeat this condition three to five times.
5. With the scan tool check active DTCs.

   Is the DTC active?

   Yes

   - Go To 2.

   No

   - Perform the INTERMITTENT CONDITION diagnostic procedure. Refer to **INTERMITTENT CONDITION - 6.7L** .

2. **CHECK FOR CYLINDER MISFIRE**
   1. Start the engine.
   2. With the scan tool, navigate to Systems Tests, and perform the Injector Kill System Test.

      Were any cylinders found to be faulty or low?

      Yes

      - Perform the CHECKING ENGINE MISFIRE / RUNS ROUGH / PERFORMANCE TEST diagnostic procedure. Refer to **DIAGNOSIS AND TESTING, 6.7L** .
      - Perform the POWERTRAIN VERIFICATION TEST. Refer to **POWERTRAIN VERIFICATION TEST - 6.7L** .

      No

      - Go To 3.

3. **CHECK FOR EXCESSIVE ENGINE OIL BEING INTRODUCED INTO THE AFTERTREATMENT SYSTEM**
   1. Turn the ignition off.
   2. Remove the turbocharger outlet and inspect for signs of oil, fuel or moisture being introduced into the aftertreatment system from the engine.

      Was engine oil, fuel or moisture found in the turbocharger exhaust outlet?

      Yes

      - Locate the cause of possible diesel fuel or engine oil being carried from the engine into the exhaust system. Inspect the SCR Catalyst for possible damage.
      - Perform the POWERTRAIN VERIFICATION TEST. Refer to **POWERTRAIN**

VERIFICATION TEST - 6.7L .

No

- Go To 4.

4. **CHECK THE DECOMPOSITION TUBE FOR DIESEL EXHAUST FLUID DEPOSITS**
   1. Remove the DEF Injector. Refer to **INJECTOR, DIESEL EXHAUST FLUID, REMOVAL** .
   2. Visually inspect the Decomposition Tube for signs of diesel exhaust fluid crystals or deposits.

      Were any deposits found?

      Yes

      - Remove the crystallization build up.
      - Perform the POWERTRAIN VERIFICATION TEST. Refer to **POWERTRAIN VERIFICATION TEST - 6.7L** .

      No

      - Go To 5.

5. **CHECK THE DEF INJECTOR**
   1. Reconnect the DEF Injector harness connector.
   2. Place the DEF Injector in a container to capture the fluid sprayed.
   3. Turn the ignition on.
   4. With the scan tool, navigate to Systems Tests and actuate the Diesel Exhaust Fluid Doser Pump Override Test.

      NOTE: **This Test will run for six minutes before timing out. The amount of flow may fluctuate through out the test, therefore the test must be allowed to run completely in order for the results to be accurate. The fluid should spray out as a mist. There should be no dripping from the holes in the DEF Injector at any time during the duration of the test procedure.**

   5. Measure the amount of fluid sprayed after the test times out.

      Does the fluid sprayed measure between 85 ml and 115 ml?

      Yes

      - Replace the NOx Sensor 1/2 in accordance with the service information.
      - Perform the POWERTRAIN VERIFICATION TEST. Refer to **POWERTRAIN VERIFICATION TEST - 6.7L** .

No

- Replace the DEF Injector in accordance with the service information. Refer to **INJECTOR, DIESEL EXHAUST FLUID, REMOVAL** .
- Perform the POWERTRAIN VERIFICATION TEST. Refer to **POWERTRAIN VERIFICATION TEST - 6.7L** .

P22A7-NOX SENSOR HEATER CIRCUIT PERFORMANCE - BANK 1 SENSOR 2

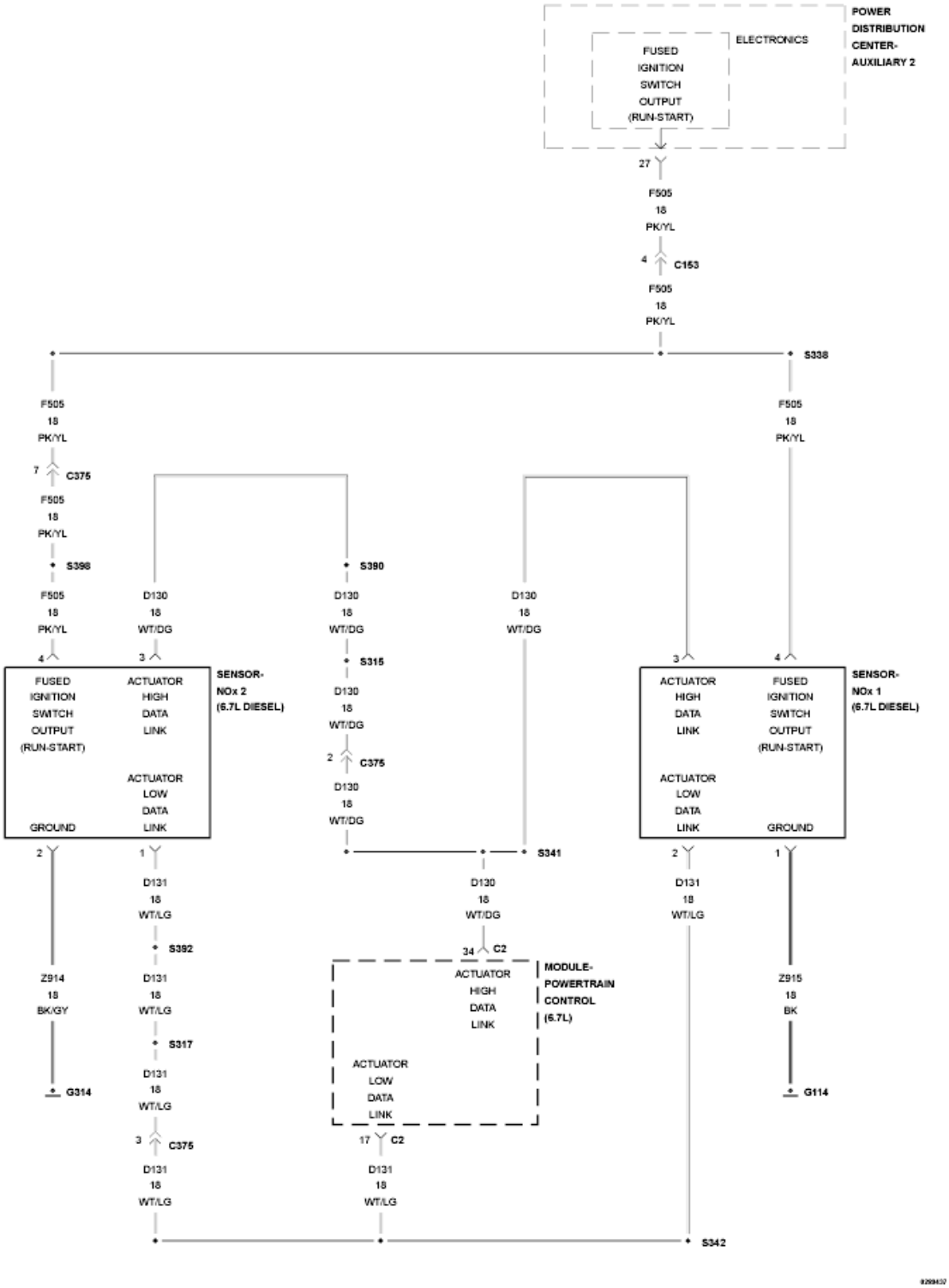

Fig. 23: NOx Sensors Wiring Diagram
Courtesy of CHRYSLER GROUP, LLC

For a complete wiring diagram, **refer to appropriate SYSTEM WIRING DIAGRAMS article** .

THEORY OF OPERATION

The aftertreatment system is equipped with two NOx Sensors and modules. The upstream NOx Sensor 1/1 is located before the SCR Catalyst and is permanently connected to a corresponding NOx Sensor Module mounted on the right frame rail. The downstream NOx Sensor 1/2 is located at the outlet of the SCR Catalyst and is permanently connected to a corresponding NOx Sensor Module also mounted on the right frame rail. The NOx Sensors and NOx Sensor Modules are calibrated to each other and must be replaced as an assembly. The two NOx Sensor and Module assemblies are not interchangeable. The NOx Sensor Modules are smart devices and communicate with the Powertrain Control Module (PCM) over the J1939 Data Link. The NOx Sensor Modules perform their own internal diagnostics and report malfunctions back to the PCM. The NOx Sensors are used to monitor the efficiency of the SCR Catalyst and dosing system. The PCM will illuminate the MIL lamp immediately after the monitor runs and fails. The PCM will turn off the MIL Lamp after the monitor runs and passes for three consecutive trips.

WHEN MONITORED:

When the engine is running and the exhaust temperature at NOx Sensor 1/2 is above 150°C (302°F).

SET CONDITION:

The Powertrain Control Module detects that the NOx Sensor heater is unable to maintain its normal operating temperature.

POSSIBLE CAUSES

Possible Causes
OTHER NOx SENSOR RELATED DTCS
NOx SENSOR 1/2

Always perform the Pre-Diagnostic Troubleshooting procedure before proceeding. Refer to PRE-DIAGNOSTIC TROUBLESHOOTING PROCEDURE - 6.7L .

DIAGNOSTIC TEST

1. **ACTIVE DTC**
    1. Ignition on, engine not running.
    2. With the scan tool check for active DTCs.

       Is the DTC active?

       Yes

       - Replace the NOx Sensor 1/2 in accordance with the service information. Refer to **SENSOR, NOX, REMOVAL** .

       NOTE: **If DTCs P1C56, P220B, P229E, P2470, or P2471 are active, perform the diagnostic for those DTCs before replacing the NOx Sensor. Refer to P1C56 , P220B, P229E, P2470 , or P2471 .**

No

- Perform the INTERMITTENT CONDITION diagnostic procedure. Refer to **INTERMITTENT CONDITION - 6.7L** .

P240F-EGR SLOW RESPONSE

For a complete wiring diagram, **refer to appropriate SYSTEM WIRING DIAGRAMS article** .

THEORY OF OPERATION

The EGR Valve position is monitored by the Powertrain Control Module (PCM). The purpose of this monitor is compare the EGR Valve actual position to position commanded by the PCM. If these values differ by a significant value for an extended period of time in two consecutive drive cycles, the PCM will turn on the MIL Light, and EGR flow will be disabled.

WHEN MONITORED:

Continuously with the ignition on, and no other EGR Valve DTCs present.

SET CONDITION:

The PCM detects a significant difference between the EGR actual position and commanded position for and extended period of time.

POSSIBLE CAUSES

Possible Causes
EGR VALVE FOULED
EGR VALVE

Always perform the Pre-Diagnostic Troubleshooting procedure before proceeding. Refer to PRE-DIAGNOSTIC TROUBLESHOOTING PROCEDURE - 6.7L .

DIAGNOSTIC TEST

1. **CHECK FOR ACTIVE DTC**

NOTE: **If other EGR related DTCs are present and active, repair those DTCs before proceeding.**

1. Start the engine and test drive the vehicle.
2. With the scan tool, View all active DTCs.

Is the DTC Active?

Yes

- Go To 2.

No

- Perform the INTERMITTENT CONDITION diagnostic procedure. Refer to **INTERMITTENT CONDITION - 6.7L** .

2. **CHECK THE EGR VALVE**
    1. With the scan tool, Erase DTCs.
    2. Turn the ignition off.
    3. Remove and clean the EGR valve with Mopar EGR Valve cleaner. Refer to **VALVE, EXHAUST GAS RECIRCULATION (EGR), 6.7L DIESEL, CLEANING** .
    4. Start the engine and test drive the vehicle.
    5. With the scan tool, View DTCs.

    Did the DTCs return?

    Yes

    - Replace the EGR Valve in accordance with the service information. Refer to **VALVE, EXHAUST GAS RECIRCULATION (EGR), 6.7L DIESEL, REMOVAL** .
    - Perform the POWERTRAIN VERIFICATION TEST. Refer to **POWERTRAIN VERIFICATION TEST - 6.7L** .

    No

    - Repair complete.
    - Perform the POWERTRAIN VERIFICATION TEST. Refer to **POWERTRAIN VERIFICATION TEST - 6.7L** .

P242B-EXHAUST GAS TEMP SENSOR CIRCUIT PERFORMANCE - BANK 1 SENSOR 3

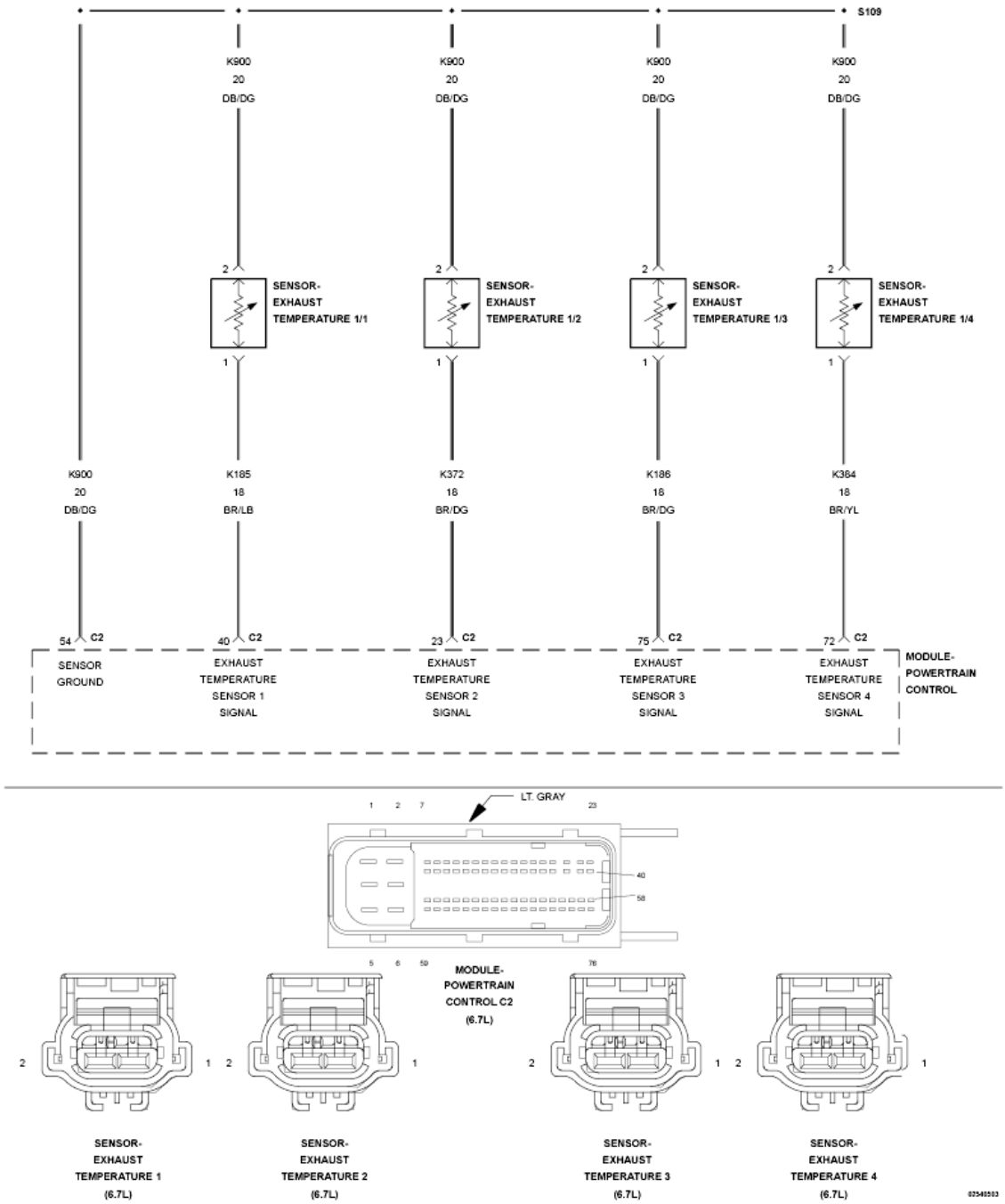

Fig. 24: Exhaust Gas Temperature Sensor Circuit Schematic
Courtesy of CHRYSLER GROUP, LLC

For a complete wiring diagram, **refer to appropriate SYSTEM WIRING DIAGRAMS article** .

THEORY OF OPERATION

The Exhaust Temperature Sensors are used by the Powertrain Control Module (PCM) to monitor the engine exhaust temperatures in the aftertreatment system. The Exhaust Temperature Sensors are thermistors and change resistance based on the temperature being measured. The Exhaust Temperature Sensors receive a 5-Volt

signal from the PCM and share a sensor ground. The PCM monitors the change in signal voltage and converts this to a temperature value. The PCM illuminates the MIL lamp when the monitor runs and fails in two consecutive trips. A default value will be used for the Exhaust Temperature Sensor 1/3 and active regeneration of the Diesel Particulate Filter will be disabled. The PCM will turn off the MIL lamp immediately after the diagnostic runs and passes. The PCM will turn off the MIL light immediately after the diagnostic runs and passes in four consecutive drive cycles.

WHEN MONITORED:

With the engine running.

SET CONDITION:

The Powertrain Control Module (PCM) detects that the Exhaust Temperature Sensor 1/3 reading is not increasing with engine operating temperature after engine startup.

POSSIBLE CAUSES

Possible Causes
EXHAUST TEMPERATURE SENSOR

Always perform the Pre-Diagnostic Troubleshooting procedure before proceeding. Refer to PRE-DIAGNOSTIC TROUBLESHOOTING PROCEDURE - 6.7L .

DIAGNOSTIC TEST

1. **OTHER DTCS PRESENT**
    1. Turn the ignition on.
    2. With the scan tool, read DTCs.

       Are either of the Exhaust Temperature Sensor 1/3 Low or High DTCs present?

       Yes

       - Repair the other DTCs before proceeding.
       - Perform the POWERTRAIN VERIFICATION TEST. Refer to **POWERTRAIN VERIFICATION TEST - 6.7L** .

       No

       - Go To 2.
2. **EXHAUST TEMPERATURE SENSOR 1/3**
    1. Remove the Exhaust Temperature Sensor 1/3 and reconnect the harness connector to the sensor. Monitor the scan tool, while heating the sensor with an external heat source (DO NOT USE OPEN FLAME).

Does the reading from the sensor increase at least 5°F on the scan tool?

Yes

- Perform the INTERMITTENT CONDITION diagnostic procedure. Refer to **INTERMITTENT CONDITION - 6.7L** .

No

- Replace the Exhaust Temperature Sensor 1/3 in accordance with the service information.
- Perform the POWERTRAIN VERIFICATION TEST. Refer to **POWERTRAIN VERIFICATION TEST - 6.7L** .

P242C-EXHAUST GAS TEMPERATURE SENSOR CIRCUIT LOW- BANK 1 SENSOR 3

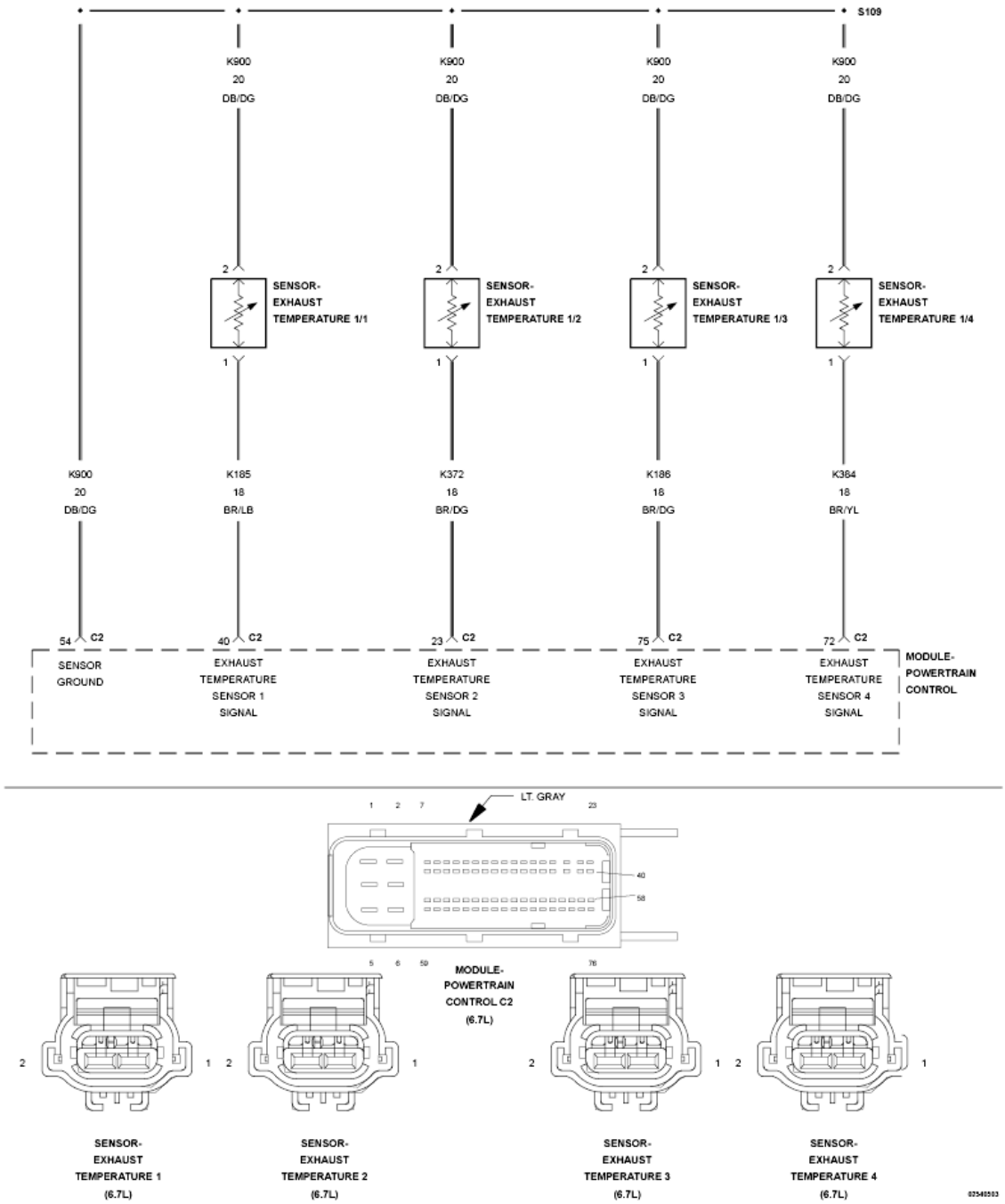

Fig. 25: Exhaust Gas Temperature Sensor Circuit Schematic
Courtesy of CHRYSLER GROUP, LLC

For a complete wiring diagram, **refer to appropriate SYSTEM WIRING DIAGRAMS article** .

THEORY OF OPERATION

The Exhaust Temperature Sensors are used by the Powertrain Control Module (PCM) to monitor the engine exhaust temperatures in the aftertreatment system. The Exhaust Temperature Sensors are thermistors and change resistance based on the temperature being measured. The Exhaust Temperature Sensors receive a 5-Volt

signal from the PCM and share a sensor ground. The PCM monitors the change in signal voltage and converts this to a temperature value. The PCM illuminates the MIL lamp when the monitor runs and fails in two consecutive trips. A default value will be used for the Exhaust Temperature Sensor 1/3 and active regeneration of the Diesel Particulate Filter will be disabled. The PCM will turn off the MIL lamp immediately after the diagnostic runs and passes. The PCM will turn off the MIL light immediately after the diagnostic runs and passes in four consecutive drive cycles.

WHEN MONITORED:

with the ignition on.

SET CONDITION:

The Exhaust Temperature Sensor Signal 1/3 circuit is below 0.08 Volts for two seconds.

POSSIBLE CAUSES

Possible Causes
(K186) EXHAUST GAS TEMPERATURE 1/3 SENSOR SIGNAL CIRCUIT SHORTED TO GROUND
(K186) EXHAUST GAS TEMPERATURE 1/3 SENSOR SIGNAL CIRCUIT SHORTED TO THE (K900) SENSOR GROUND CIRCUIT
EXHAUST GAS TEMPERATURE 1/3 SENSOR
POWERTRAIN CONTROL MODULE (PCM)

Always perform the Pre-Diagnostic Troubleshooting procedure before proceeding. Refer to PRE-DIAGNOSTIC TROUBLESHOOTING PROCEDURE - 6.7L .

DIAGNOSTIC TEST

1. **ACTIVE DTC**
    1. Turn the ignition on.
    2. With the scan tool, record all Freeze frame data.
    3. With the scan tool, erase DTCs.
    4. Turn the ignition off for 75 seconds.
    5. Turn the ignition on.
    6. With the scan tool, read DTCs.

    Did the DTC reset?

    Yes

    - Go To 2.

    No

- Perform the INTERMITTENT CONDITION diagnostic procedure. Refer to **INTERMITTENT CONDITION - 6.7L** .

2. **CHECK THE (K186) EXHAUST TEMPERATURE 1/3 SIGNAL CIRCUIT FOR A SHORT TO GROUND**

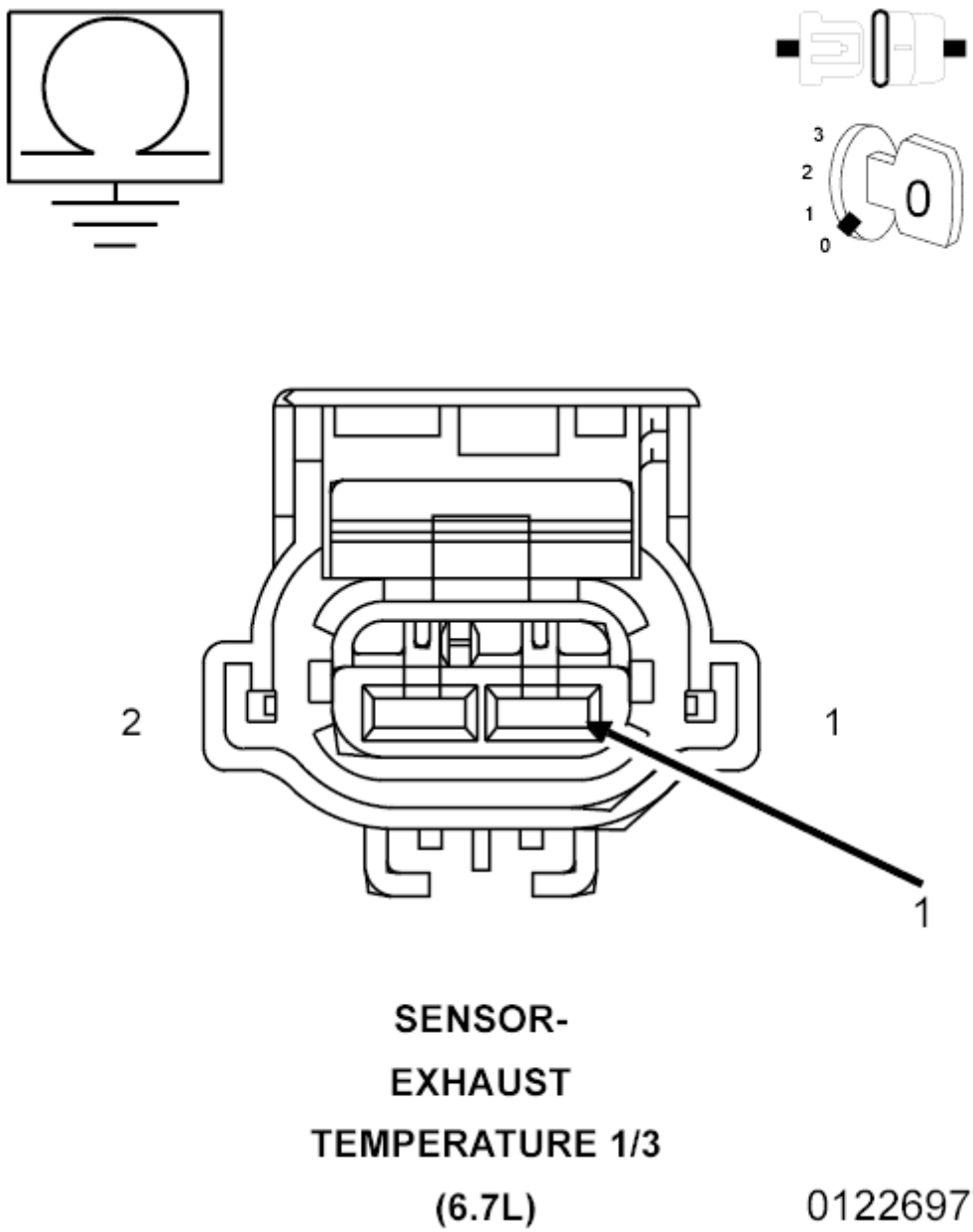

Fig. 26: Checking Exhaust Temperature 1/3 Signal Circuit For Short To Ground
Courtesy of CHRYSLER GROUP, LLC

1. Turn the ignition off.
2. Disconnect the Exhaust Gas Temperature Sensor 1/3 harness connector.
3. Disconnect the PCM C2 harness connector.

4. Measure the resistance between ground and the (K186) Exhaust Gas Temperature Sensor 1/2 Signal circuit at the sensor Exhaust Gas Temperature 1/2 harness connector.

   Is the resistance below 10k Ohms?

   Yes

   - Go To 3.

   No

   - Repair the (K186) Exhaust Gas Temperature Sensor 1/2 Signal circuit for a short to ground.
   - Perform the POWERTRAIN VERIFICATION TEST. Refer to **POWERTRAIN VERIFICATION TEST - 6.7L** .

3. **CHECK FOR THE (K186) EXHAUST TEMPERATURE 1/3 SIGNAL CIRCUIT SHORTED TO THE (K900) SENSOR GROUND**

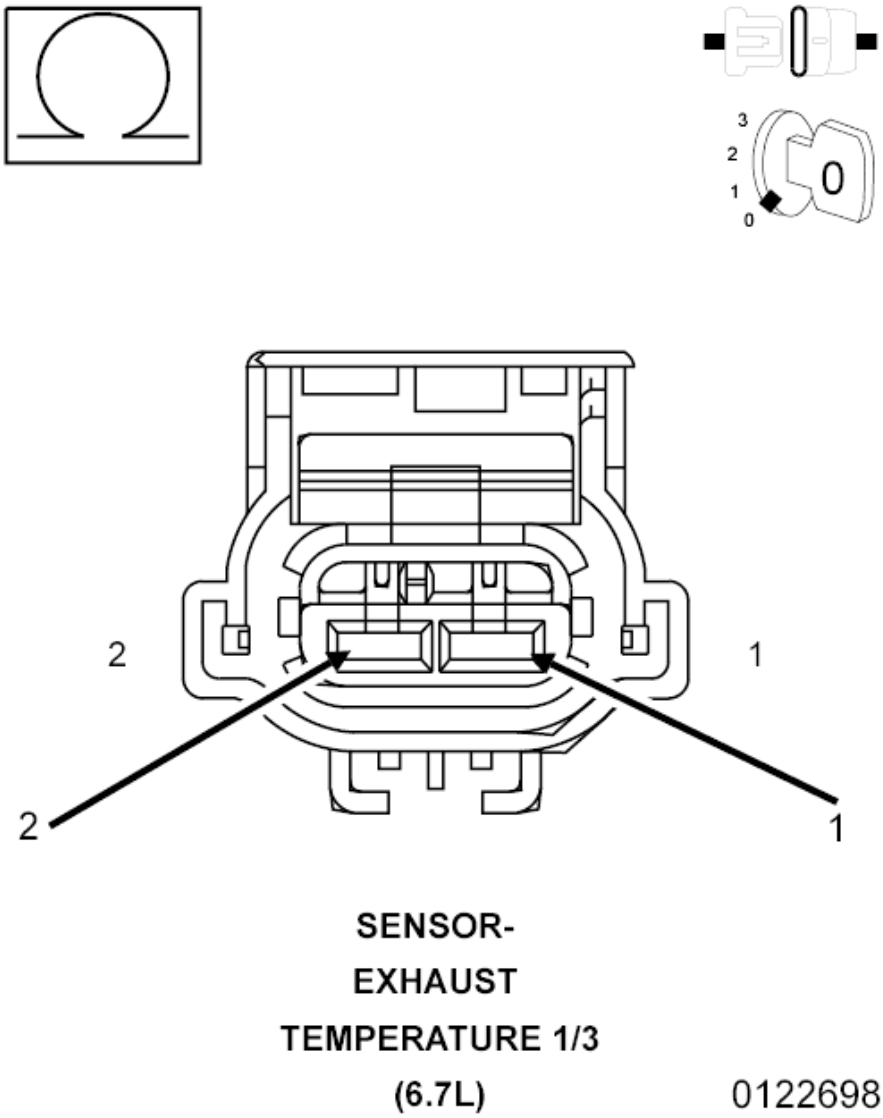

Fig. 27: Checking Exhaust Temperature 1/3 Signal Circuit For Short To Sensor Ground
Courtesy of CHRYSLER GROUP, LLC

1. Measure the resistance between the (K186) Exhaust Gas Temperature Sensor 1/3 Signal circuit and (K900) Sensor Ground circuit at the Exhaust Gas Temperature Sensor 1/3 harness connector.

   Is the resistance below 10k Ohms?

   Yes

   - Repair the short between the (K186) Exhaust Gas Temperature Sensor 1/3 Signal circuit and (K900) Sensor Ground circuit.
   - Perform the POWERTRAIN VERIFICATION TEST. Refer to **POWERTRAIN VERIFICATION TEST - 6.7L** .

No

- Go To 4.

4. **CHECK THE EXHAUST GAS TEMPERATURE SENSOR**
    1. Reconnect the Exhaust Gas Temperature Sensor 1/3 harness connector.
    2. Reconnect the PCM C2 harness connector.
    3. Turn the ignition on.
    4. With the scan tool, erase DTCs.
    5. Turn the ignition off for 75 seconds.
    6. Disconnect the Exhaust Gas Temperature Sensor 1/3 harness connector.
    7. Turn the ignition on.
    8. With the scan tool, read DTCs.

    Does the DTC P242D become active?

    Yes

    - Replace the Exhaust Gas Temperature Sensor 1/3 in accordance with the service information.
    - Perform the POWERTRAIN VERIFICATION TEST. Refer to **POWERTRAIN VERIFICATION TEST - 6.7L** .

    No

    - Replace the Powertrain Control Module in accordance with the service information.
    - Perform the POWERTRAIN VERIFICATION TEST. Refer to **POWERTRAIN VERIFICATION TEST - 6.7L** .

P242D-EXHAUST GAS TEMPERATURE SENSOR CIRCUIT HIGH - BANK 1 SENSOR 3

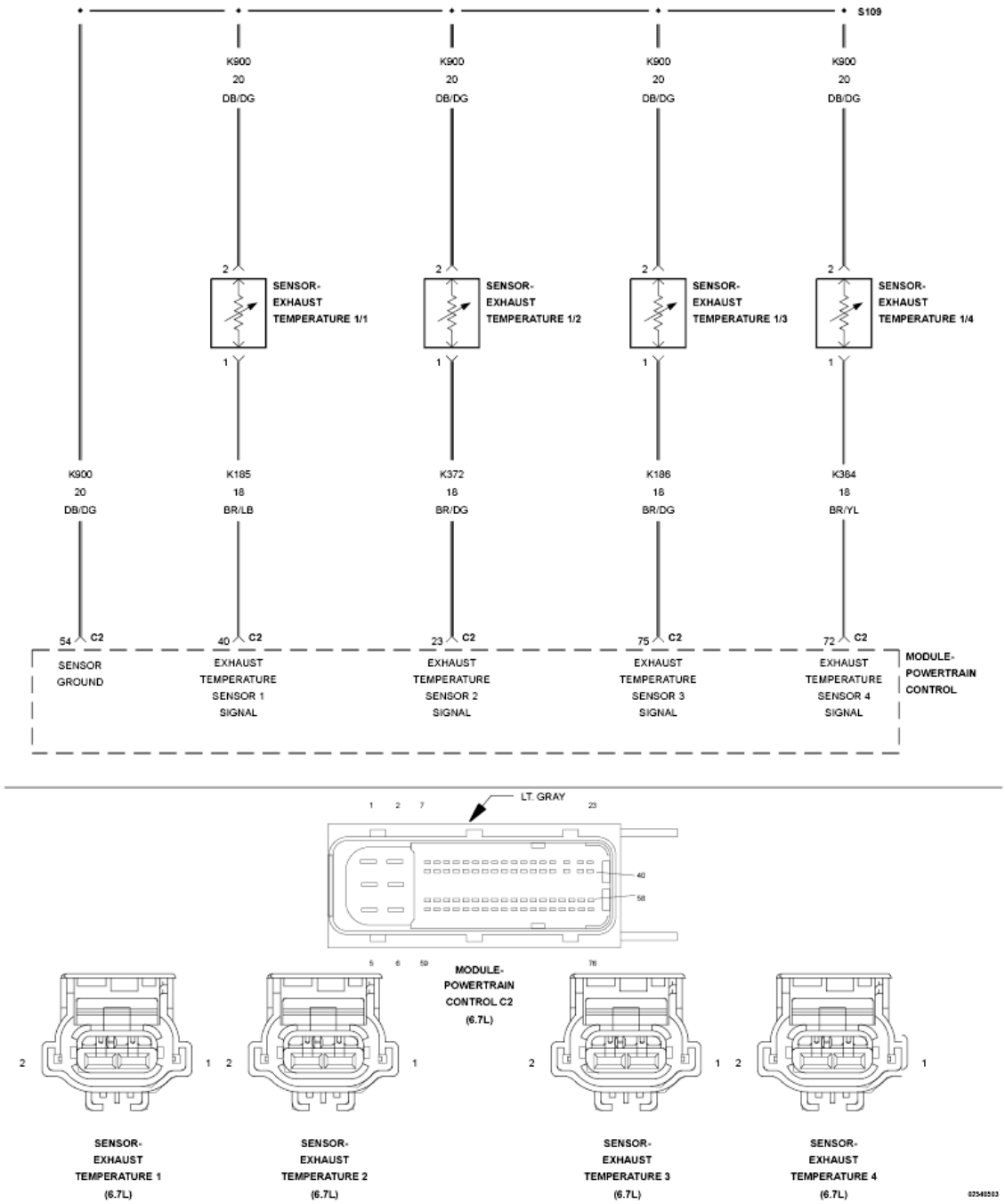

Fig. 28: Exhaust Gas Temperature Sensor Circuit Schematic
Courtesy of CHRYSLER GROUP, LLC

For a complete wiring diagram, **refer to appropriate SYSTEM WIRING DIAGRAMS article** .

THEORY OF OPERATION

The Exhaust Temperature Sensors are used by the Powertrain Control Module (PCM) to monitor the engine exhaust temperatures in the aftertreatment system. The Exhaust Temperature Sensors are thermistors and change resistance based on the temperature being measured. The Exhaust Temperature Sensors receive a 5-Volt

signal from the PCM and share a sensor ground. The PCM monitors the change in signal voltage and converts this to a temperature value. The PCM illuminates the MIL lamp when the monitor runs and fails in two consecutive trips. A default value will be used for the Exhaust Temperature Sensor 1/3 and active regeneration of the Diesel Particulate Filter will be disabled. The PCM will turn off the MIL lamp immediately after the diagnostic runs and passes. The PCM will turn off the MIL light immediately after the diagnostic runs and passes in four consecutive drive cycles.

WHEN MONITORED:

With the ignition on.

SET CONDITION:

The Powertrain Control Module (PCM) will set the fault if it detects that the Exhaust Temperature Sensor 1/3 Signal voltage is above 4.88 Volts for two seconds.

POSSIBLE CAUSES

Possible Causes
(K186) EXHAUST GAS TEMPERATURE SENSOR 1/3 SIGNAL CIRCUIT SHORTED TO VOLTAGE
(K186) EXHAUST GAS TEMPERATURE SENSOR 1/3 SIGNAL CIRCUIT OPEN/HIGH RESISTANCE
(K900) SENSOR GROUND CIRCUIT OPEN/HIGH RESISTANCE
EXHAUST GAS TEMPERATURE SENSOR
EXTREME COLD AMBIENT TEMPERATURE AT ENGINE START UP
POWERTRAIN CONTROL MODULE (PCM)

Always perform the Pre-Diagnostic Troubleshooting procedure before proceeding. Refer to PRE-DIAGNOSTIC TROUBLESHOOTING PROCEDURE - 6.7L .

DIAGNOSTIC TEST

1. **ACTIVE DTC**
    1. Turn the ignition on.
    2. With the scan tool, record all Freeze frame data.
    3. With the scan tool, erase DTCs.
    4. Turn the ignition off for 75 seconds.
    5. Turn the ignition on.
    6. With the scan tool, read DTCs.

    Did the DTC reset?

    Yes

- Go To 2.

No

- Perform the INTERMITTENT CONDITION diagnostic procedure. Refer to **INTERMITTENT CONDITION - 6.7L** .

2. **CHECK THE (K186) EXHAUST GAS TEMPERATURE 1/3 SIGNAL CIRCUIT FOR A SHORT TO VOLTAGE**

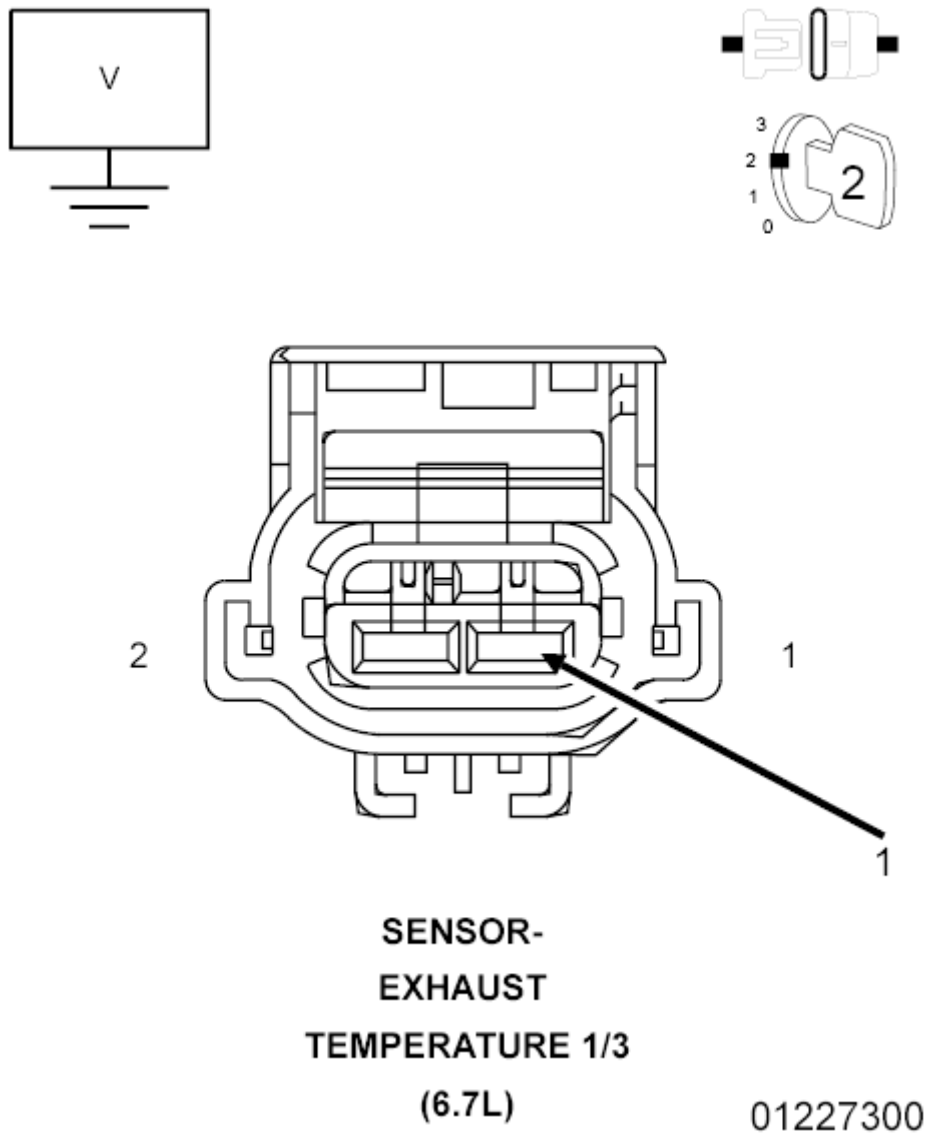

Fig. 29: Checking Exhaust Gas Temperature 1/3 Signal Circuit For Short To Voltage
Courtesy of CHRYSLER GROUP, LLC

1. Ignition on.
2. Disconnect the Exhaust Temperature Sensor 1/3 harness connector.

NOTE: Check connectors - Clean/repair as necessary.

3. Measure the voltage on the (K186) Exhaust Gas Temperature Sensor 1/3 Signal circuit at the Exhaust Temperature Sensor 1/3 harness connector.

   Is the voltage reading above 5.2 volts?

   Yes

   - Repair the (K186) Exhaust Gas Temperature Sensor 1/3 Signal circuit for a short to voltage.
   - Perform the POWERTRAIN VERIFICATION TEST. Refer to **POWERTRAIN VERIFICATION TEST - 6.7L** .

   No

   - Go To 3.

3. **CHECK THE (K186) EXHAUST GAS TEMPERATURE 1/3 SIGNAL CIRCUIT FOR AN OPEN/HIGH RESISTANCE**

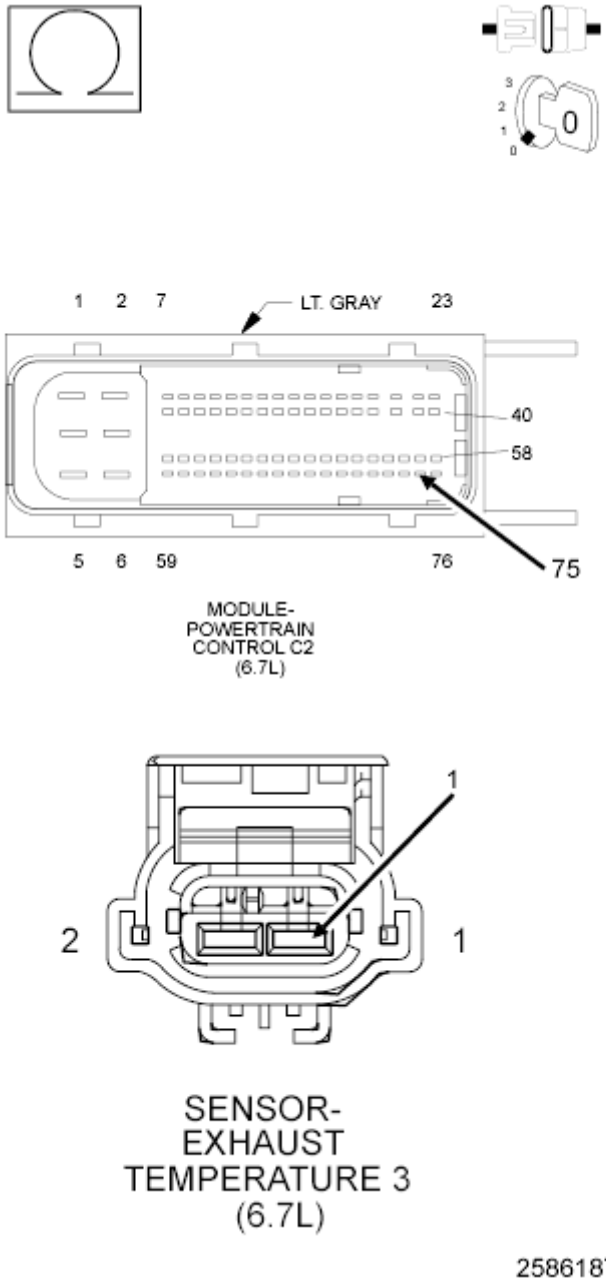

Fig. 30: Checking Exhaust Gas Temperature 1/3 Signal Circuit For Open Or High Resistance
Courtesy of CHRYSLER GROUP, LLC

1. Turn the ignition off.
2. Disconnect the PCM C2 harness connector.
3. Measure the resistance of the (K186) Exhaust Gas Temperature Sensor 1/3 Signal circuit between the Exhaust Gas Temperature Sensor 1/3 harness connector and the PCM C2 harness connector.

   Is the resistance below 5.0 Ohms?

   Yes

- Go To 4.

No

- Repair the (K186) Exhaust Temperature 1/3 Signal circuit for an open or high resistance.
- Perform the POWERTRAIN VERIFICATION TEST. Refer to **POWERTRAIN VERIFICATION TEST - 6.7L** .

4. **CHECK THE (K900) SENSOR GROUND CIRCUIT FOR AN OPEN/HIGH RESISTANCE**

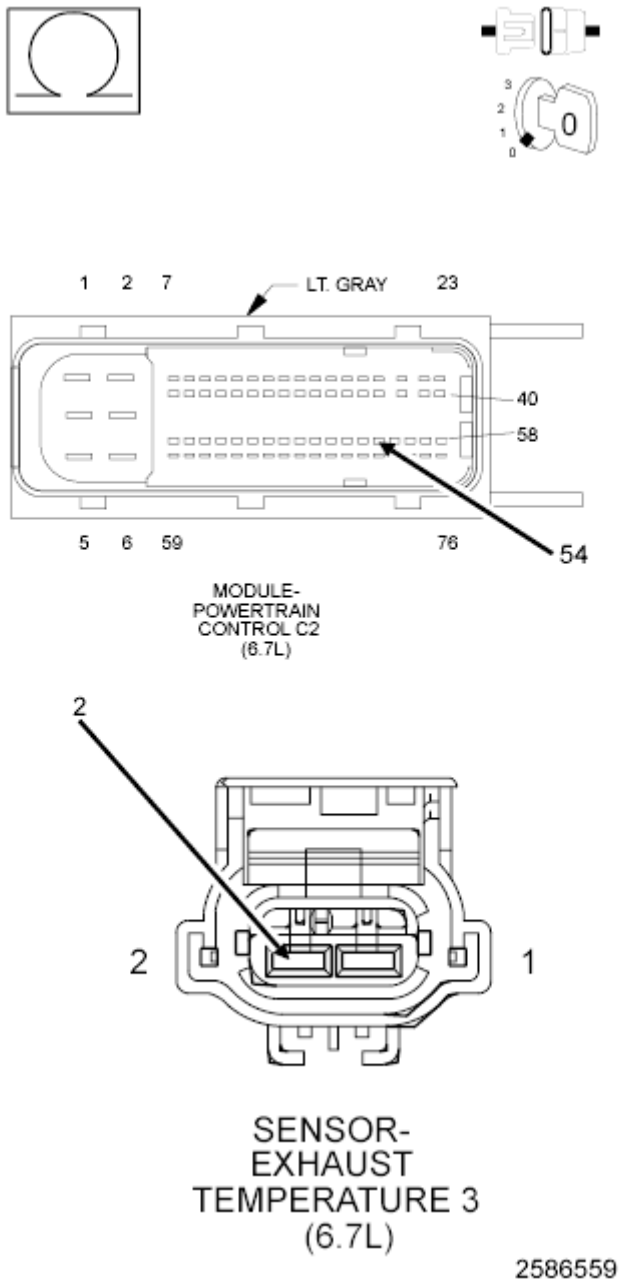

Fig. 31: Checking Exhaust Gas Temperature Sensor Ground Circuit For Open Or High Resistance
Courtesy of CHRYSLER GROUP, LLC

1. Measure the resistance of the (K900) Sensor ground circuit between the Exhaust Gas Temperature Sensor 1/3 harness connector and the PCM C2 harness connector.

   Is the resistance below 5.0 Ohms?

   Yes

   - Go To 5.

   No

   - Repair the (K900) Sensor ground circuit for an open or high resistance.
   - Perform the POWERTRAIN VERIFICATION TEST. Refer to **POWERTRAIN VERIFICATION TEST - 6.7L** .

5. **CHECK THE EXHAUST GAS TEMPERATURE SENSOR**
   1. Turn the ignition on.
   2. While monitoring the scan tool, connect a jumper across the Exhaust Gas Temperature Sensor 1/3 connector for at least five seconds.

      Does the DTC P242C become active?

      Yes

      - Replace the Exhaust Gas Temperature Sensor 1/3 in accordance with the service information.
      - Perform the POWERTRAIN VERIFICATION TEST. Refer to **POWERTRAIN VERIFICATION TEST - 6.7L** .

      No

      - Replace the Powertrain Control Module (PCM) in accordance with the service information.
      - Perform the POWERTRAIN VERIFICATION TEST. Refer to **POWERTRAIN VERIFICATION TEST - 6.7L** .

P242F-DIESEL PARTICULATE FILTER RESTRICTION - ASH ACCUMULATION

For a complete wiring diagram, **refer to appropriate SYSTEM WIRING DIAGRAMS article** .

THEORY OF OPERATION

The engine aftertreatment system monitors the soot load in the Diesel Particulate Filter. Under normal operating conditions, the Diesel Particulate Filter is self-cleaning, where soot is converted to ash. Under light load operating conditions, the driver may be notified via the vehicle's EVIC message center that it may be necessary to modify the vehicles driving routine in order to allow the Diesel Particulate Filter system to self clean. If the vehicle's EVIC message center notification is ignored, the vehicle will eventually de-rate the engine and set a DTC and MIL lamp, requiring service. The soot load in the Diesel Particulate Filter is estimated using the Exhaust Differential Pressure Sensor and the calculated soot output of the engine. This fault code can be

triggered if the application is not operating at a duty cycle high enough to actively regenerate the Diesel Particulate Filter. This fault code indicates that the exhaust temperatures exiting the Turbocharger are not high enough to actively regenerate the soot that is trapped in the Diesel Particulate Filter. It may be necessary to increase the duty cycle of the application in order to prevent plugging of the Diesel Particulate Filter. This fault will be triggered if the Powertrain Control Module (PCM) detects that the soot load of the Diesel Particulate Filter has surpassed the most severe level threshold. The PCM will illuminate the MIL lamp immediately when the diagnostic runs and fails. The driver will be notified via the vehicle's EVIC Message Center (CATALYST FULL: SERVICE REQD). The Powertrain Control Module (PCM) will also initiate a de-rate of engine power output in an effort to protect the vehicle aftertreatment system. The PCM will turn off the MIL lamp immediately after the soot load in the Diesel Particulate Filter has dropped below the severe level threshold and the DTC has been cleared.

WHEN MONITORED:

The diagnostic runs continuously when the engine is running.

SET CONDITION:

The Powertrain Control Module (PCM) detects that the ash load of the Diesel Particulate Filter has surpassed the most severe level threshold.

POSSIBLE CAUSES

Possible Causes
PROGRESSIVE DAMAGE TO THE AFTERTREATMENT SYSTEM FROM AN ENGINE FAILURE, INCLUDING BUT NOT LIMITED TO EXCESSIVE FUEL, OIL OR COOLANT IN THE AFTERTREATMENT SYSTEM MAY CONTRIBUTE TO A HIGH PRESSURE RELATED FAULT.
DIESEL PARTICULATE FILTER COULD BE PLUGGED WITH ACCUMULATED ASH.
OPERATING IN LIGHT LOAD CONDITIONS THAT PREVENT EXHAUST TEMPERATURES FROM BEING HIGH ENOUGH TO ACTIVELY REGENERATE THE DIESEL PARTICULATE FILTER.
TEMPERATURE SENSOR(S) FAILED IN-RANGE

Always perform the Pre-Diagnostic Troubleshooting procedure before proceeding. Refer to PRE-DIAGNOSTIC TROUBLESHOOTING PROCEDURE - 6.7L .

DIAGNOSTIC TEST

1. **INSPECT THE AFTERTREATMENT SYSTEM**

NOTE: **If there are any DTCs present for the Exhaust Temperature Sensors or Exhaust Differential Pressure Sensor, diagnose those DTCs before proceeding with this test procedure.**

NOTE: **DTC P242F is usually the result of a driveability or fuel system failure. This DTC indicates that the Diesel Particulate Filter may either be face plugged**

or filled with ash. If there are any other DTCs or driveability concerns present with this DTC, diagnose and repair those concerns before continuing with this test procedure. Not repairing the cause of the excess soot being generated will cause the Diesel Particulate Filter to fill with soot too often and fail prematurely.

1. Perform the AFTERTREATMENT INSPECTION GUIDELINE - 6.7L procedure. Refer to **DIAGNOSIS AND TESTING, 6.7L** .

   Was any internal damage found in the Diesel Particulate Filter?

   Yes

   - Replace the Diesel Particulate Filter and reset the regenerative timers with the scan tool. Remove and clean the EGR Valve. Refer to **VALVE, EXHAUST GAS RECIRCULATION (EGR), 6.7L DIESEL, CLEANING** . Perform the CHECKING ENGINE MISFIRE / RUNS ROUGH / PERFORMANCE test procedure. Refer to **DIAGNOSIS AND TESTING, 6.7L** .
   - Perform the DIESEL AFTERTREATMENT VALIDATION - 6.7L. Refer to **DIESEL AFTERTREATMENT VALIDATION- 6.7L** .

   No

   - Go To 2.

2. **VERIFY THE ESTIMATED SOOT LOAD**
   1. Ignition on, engine not running.
   2. With the scan tool, navigate to Data Display and read the Estimated Soot Load.

      Is the Estimated Soot Load Based on Delta Pressure above 37.0 grams (pick-up) 57.0 grams (cab chassis)?

      Yes

      - Go To 3.

      No

      - Erase DTCs and reset the regenerative timers with the scan tool.
      - Perform the DIESEL AFTERTREATMENT VALIDATION - 6.7L. Refer to **DIESEL AFTERTREATMENT VALIDATION- 6.7L** .

3. **CHECK FOR THE ESTIMATED SOOT LOAD ABOVE MAX SOOT LOAD**
   1. Ignition on, engine not running.
   2. With the scan tool, navigate to Data Display and read the Estimated Soot Load.

      Is the Estimated Soot Load Based on Delta Pressure above 75.0 grams (pick-up) 92.0 grams (cab

chassis)?

Yes

- Replace the Diesel Particulate Filter.
- Perform the DIESEL AFTERTREATMENT VALIDATION - 6.7L. Refer to **DIESEL AFTERTREATMENT VALIDATION- 6.7L** .

No

- Go To 4.

4. **STATIONERY REGENERATION**
   1. With the scan tool, erase DTCs, reset regenerative filter timers, and drive vehicle until P1451 resets (this will allow you to perform a stationary Desoot).

      NOTE: The vehicle will not allow the Stationery Desoot to run if the P242F DTC sets. For this reason, test drive the vehicle as close to the shop as possible in order to get back to the shop before the P242F DTC can set.

   2. Perform the scan tool initiated Stationary Desoot.
   3. After the Stationary Desoot is completed, erase the DTCs with the scan tool.
   4. Perform the DIESEL AFTERTREATMENT VALIDATION - 6.7L. Refer to **DIESEL AFTERTREATMENT VALIDATION- 6.7L** .

      Did a P1451, P2463, or P242F DTC set during the validation?

      Yes

      - Perform the CHECKING ENGINE MISFIRE / RUNS ROUGH / POOR PERFORMANCE test procedure. Refer to **DIAGNOSIS AND TESTING, 6.7L** .

      No

      - Repair complete.

P244A-DIESEL PARTICULATE FILTER DIFFERENTIAL PRESSURE TOO LOW

For a complete wiring diagram, **refer to appropriate SYSTEM WIRING DIAGRAMS article** .

THEORY OF OPERATION

This diagnostic checks to make sure that the Diesel Particulate Filter is present and functioning correctly. The Powertrain Control Module (PCM) uses the Exhaust Differential Pressure Sensor to monitor the pressure differential through the Diesel Particulate Filter. The PCM will set the fault if it detects that the Diesel Particulate Filter is not present in the aftertreatment/exhaust system. This DTC is a two trip fault. Active

regeneration of the Diesel Particulate Filter will be disabled. The PCM will turn off the MIL lamp immediately after the diagnostic runs and passes.

WHEN MONITORED:

This diagnostic runs when the engine is running, but not during active regeneration of the Diesel Particulate Filter.

SET CONDITION:

The Powertrain Control Module (PCM) will set the fault if it detects that the Diesel Particulate Filter is not present in the aftertreatment/exhaust system.

POSSIBLE CAUSES

Possible Causes
DIESEL PARTICULATE FILTER HAS BEEN REMOVED FROM THE VEHICLE
EXHAUST DIFFERENTIAL PRESSURE SENSOR TUBES ARE REVERSED AT THE DIESEL PARTICULATE FILTER
EXHAUST SYSTEM LEAK
DIESEL PARTICULATE FILTER IS CRACKED OR BROKEN INTERNALLY
EXHAUST DIFFERENTIAL PRESSURE SENSOR FAILED IN-RANGE

Always perform the Pre-Diagnostic Troubleshooting procedure before proceeding. Refer to PRE-DIAGNOSTIC TROUBLESHOOTING PROCEDURE - 6.7L .

DIAGNOSTIC TEST

1. **VISUAL INSPECTION**
    1. Inspect that the Diesel Particulate Filter has not been tampered with or removed.

       Tampering or removal of the aftertreatment system has been detected?

       Yes

       - Install the correct aftertreatment system for the vehicle.
       - Perform the DIESEL AFTERTREATMENT VALIDATION - 6.7L procedure. Refer to **DIESEL AFTERTREATMENT VALIDATION- 6.7L** .

       No

       - Go To 2.
2. **CHECK FOR THE DIESEL PARTICULATE FILTER DIFFERENTIAL PRESSURE HOSES REVERSED**
    1. Start the engine.

2. With the scan tool, monitor the soot filter delta pressure reading.
3. The delta pressure should have a positive pressure reading. A negative reading indicates the hoses are reversed.

   Is the Exhaust Differential Pressure Sensor reading a positive value?

   Yes

   - Go To 3.

   No

   - Reverse the Exhaust Differential Pressure Sensor hoses.
   - Perform the DIESEL AFTERTREATMENT VALIDATION - 6.7L procedure. Refer to **DIESEL AFTERTREATMENT VALIDATION- 6.7L** .

3. **CHECK FOR AN EXHAUST SYSTEM LEAK**
   1. Turn the ignition off.
   2. Perform the CHECKING THE EXHAUST SYSTEM FOR LEAKS diagnostic procedure. Refer to **DIAGNOSIS AND TESTING, 6.7L** .

      Were any exhaust leaks found?

      Yes

      - Repair the Exhaust System leak.
      - Perform the DIESEL AFTERTREATMENT VALIDATION - 6.7L procedure. Refer to **DIESEL AFTERTREATMENT VALIDATION- 6.7L** .

      No

      - Go To 4.

4. **PERFORM THE AFTERTREATMENT SYSTEM INSPECTION**
   1. Perform the AFTERTREATMENT INSPECTION GUIDELINE - 6.7L procedure. Refer to **DIAGNOSIS AND TESTING, 6.7L** .

      Does aftertreatment Diesel Particulate Filter show evidence of failure?

      Yes

      - Replace the Diesel Particulate Filter in accordance with the service information.
      - Perform the DIESEL AFTERTREATMENT VALIDATION - 6.7L procedure. Refer to **DIESEL AFTERTREATMENT VALIDATION- 6.7L** .

      No

- Replace the Exhaust Differential Pressure Sensor in accordance with the service information.
- Perform the DIESEL AFTERTREATMENT VALIDATION - 6.7L procedure. Refer to **DIESEL AFTERTREATMENT VALIDATION- 6.7L** .

P244D-EXHAUST TEMPERATURE TOO HIGH FOR PARTICULATE FILTER REGENERATION

For a complete wiring diagram, **refer to appropriate SYSTEM WIRING DIAGRAMS article** .

THEORY OF OPERATION

The Exhaust Temperature Sensors are used by the Powertrain Control Module (PCM) to monitor the engine exhaust temperatures in the aftertreatment system. The Exhaust Temperature Sensors are thermistors and change resistance based on the temperature being measured. The PCM provides a 5-Volt reference voltage to the sensor. The PCM monitors the voltage on the signal pin and converts this to a temperature value. When the exhaust gas temperature is cold, the sensor or thermistor resistance is high. The PCM signal voltage only pulls down a small amount through the sensor to ground. Therefore, the PCM senses a high signal voltage or low temperature. When the exhaust gas temperature is hot, the sensor resistance is low. The signal voltage pulls down a large amount. Therefore, the PCM senses a low signal voltage, or a high temperature. The PCM will illuminate the MIL lamp immediately when the diagnostic runs and fails. Active regeneration of the aftertreatment particulate filter will be disabled. This DTC fault is latched when set and can only be cleared by a scan tool.

WHEN MONITORED:

The monitor runs continuously when the engine is running.

SET CONDITION:

The Powertrain Control Module (PCM) detects that the Exhaust Temperature is greater than a calibrated temperature for a calibrated period of time.

POSSIBLE CAUSES

Possible Causes
EXCESSIVE FUEL ENTERING THE AFTERTREATMENT/EXHAUST SYSTEM
EXHAUST TEMPERATURE SENSOR FAILED IN-RANGE
EXCESSIVE ENGINE OIL BEING INTRODUCED INTO THE AFTERTREATMENT SYSTEM FROM THE ENGINE

Always perform the Pre-Diagnostic Troubleshooting procedure before proceeding. Refer to PRE-DIAGNOSTIC TROUBLESHOOTING PROCEDURE - 6.7L .

DIAGNOSTIC TEST

1. **FUEL INJECTOR**
    1. Ignition on, engine not running.

2. With the scan tool, read DTCs.

   Are any fuel injector DTCs Active?

   Yes

   - Repair any fuel injector DTCs before continuing.
   - Perform the POWERTRAIN VERIFICATION TEST. Refer to **POWERTRAIN VERIFICATION TEST - 6.7L** .

   No

   - Go To 2.

2. **EXHAUST TEMPERATURE**
   1. With the scan tool, read the Exhaust Temperature Sensors to determine the exhaust temperature.

      Is the temperature reading above 225°F?

      Yes

      - Go To 3.

      No

      - Go To 4.

3. **EXHAUST TEMPERATURE SENSORS**
   1. Start the engine.
   2. Raise the engine speed to 2500 RPMs for two minutes.

      Do the temperature readings of the Exhaust Temperature Sensors change in value at least 5°F?

      Yes

      - Go To 5.

      No

      - Replace the Exhaust Temperature Sensor that did not change in value by at least 5°F or is not updating.
      - Perform the POWERTRAIN VERIFICATION TEST. Refer to **POWERTRAIN VERIFICATION TEST - 6.7L** .

4. **EXHAUST TEMPERATURE SENSORS**
   1. Start the engine and allow it to idle for 10 minutes.
   2. With the scan tool, read the values of the Exhaust Temperature Sensors.

Do both temperature sensors read above 150°F and are the values of the temperature sensors updating?

Yes

- Go To 5.

No

- Replace the Exhaust Temperature Sensor that is not above 150°F or is not updating on the scan tool.
- Perform the POWERTRAIN VERIFICATION TEST. Refer to **POWERTRAIN VERIFICATION TEST - 6.7L** .

5. **INJECTOR RETURN FLOW TEST**
   1. Perform the INJECTOR RETURN FLOW TEST. Refer to **DIAGNOSIS AND TESTING, 6.7L** .

      Did the fuel injectors pass the test?

      Yes

      - Repair as necessary.
      - Perform the POWERTRAIN VERIFICATION TEST. Refer to **POWERTRAIN VERIFICATION TEST - 6.7L** .

      No

      - Go To 6.
6. **CHECK FOR EXCESSIVE ENGINE OIL BEING INTRODUCED INTO THE AFTERTREATMENT SYSTEM FROM THE ENGINE**
   1. Remove the turbocharger outlet and inspect for signs of oil, fuel or moisture being introduced into the aftertreatment system from the engine.

      Was engine oil, fuel or moisture found in the turbocharger exhaust outlet?

      Yes

      - Locate the cause of possible diesel fuel or engine oil being carried from the engine into the aftertreatment system. Inspect the aftertreatment for possible damage.
      - Perform the POWERTRAIN VERIFICATION TEST. Refer to **POWERTRAIN VERIFICATION TEST - 6.7L** .

      No

      - Go To 7.
7. **CHECK THE AFTERTREATMENT DIESEL PARTICULATE FILTER**

1. Remove and inspect the aftertreatment Diesel Particulate Filter.

   Does the Aftertreatment Diesel Particulate Filter show evidence of failure?

   Yes

   - Replace the aftertreatment Diesel Particulate Filter in accordance with the service information.
   - Perform the POWERTRAIN VERIFICATION TEST. Refer to **POWERTRAIN VERIFICATION TEST - 6.7L** .

   No

   - Perform the INTERMITTENT CONDITION diagnostic procedure. Refer to **INTERMITTENT CONDITION - 6.7L** .

P2453-DIESEL PARTICULATE FILTER PRESSURE SENSOR A CIRCUIT PERFORMANCE

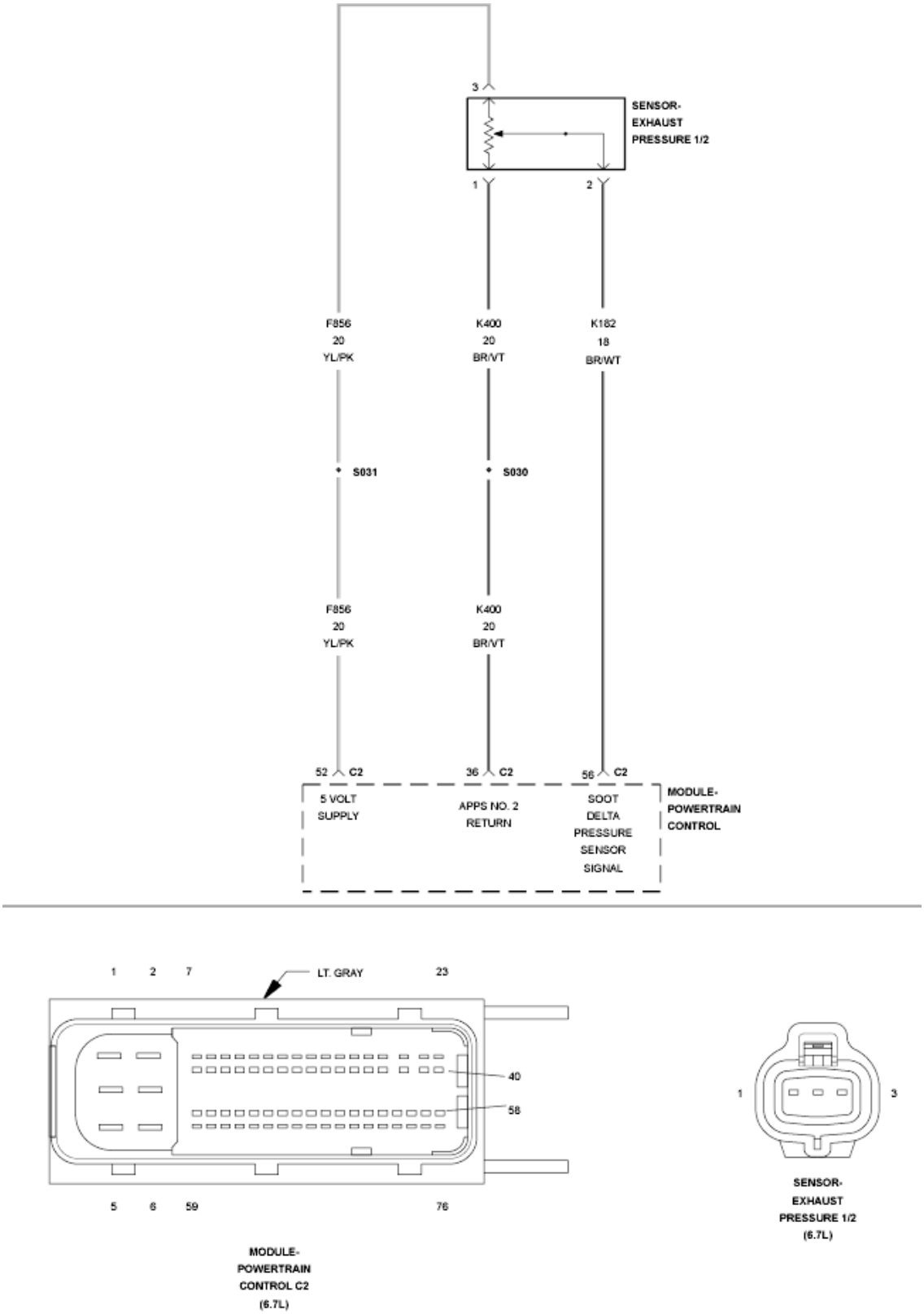

Fig. 32: Exhaust Pressure Sensor Circuit Schematic
Courtesy of CHRYSLER GROUP, LLC

For a complete wiring diagram, **refer to appropriate SYSTEM WIRING DIAGRAMS article** .

THEORY OF OPERATION

The Exhaust Differential Pressure Sensor (Exhaust Pressure Sensor 1/2) is used to detect the amount of soot and ash buildup inside the Diesel Particulate Filter. The Powertrain Control Module (PCM) provides a 5-Volt supply to the Exhaust Differential Pressure Sensor on the sensor supply circuit. The PCM also supplies a ground on the sensor return circuit. The Exhaust Differential Pressure Sensor provides a signal to the PCM. This sensor signal voltage changes based on the differential pressure across the Aftertreatment Diesel Particulate Filter. The PCM illuminates the MIL lamp immediately when the diagnostic runs and fails. A default value is used for the aftertreatment differential pressure reading when the fault is active. The PCM will turn off the MIL lamp immediately after the diagnostic runs and passes in four consecutive drive cycles.

WHEN MONITORED:

When the key is turned on.

SET CONDITION:

The Powertrain Control Module (PCM) does not see a change in pressure between key on and engine running.

POSSIBLE CAUSES

Possible Causes
AFTERTREATMENT DIESEL PARTICULATE FILTER IS CRACKED OR BROKEN
AFTERTREATMENT DIESEL PARTICULATE FILTER EXHAUST TUBES OR HOSES BROKEN
AFTERTREATMENT DIESEL PARTICULATE FILTER EXHAUST TUBES ARE REVERSED
EXHAUST SYSTEM LEAK
EXHAUST DIFFERENTIAL PRESSURE SENSOR FAILED IN-RANGE

Always perform the Pre-Diagnostic Troubleshooting procedure before proceeding. Refer to PRE-DIAGNOSTIC TROUBLESHOOTING PROCEDURE - 6.7L .

DIAGNOSTIC TEST

1. **OTHER DTCS**
    1. Ignition on, engine not running.
    2. With the scan tool, read DTCs.

    Is DTC P2454 or 2455 Active?

    Yes

    - Repair those DTCs before proceeding.

    No

- Go To 2.

2. **CHECK FOR AFTERTREATMENT SYSTEM LEAKS**
    1. Turn the ignition off.
    2. Visually inspect the Aftertreatment Diesel Particulate Filter system for leaks.

    Were any leaks found?

    Yes

    - Repair as necessary.
    - Perform the POWERTRAIN VERIFICATION TEST. Refer to **POWERTRAIN VERIFICATION TEST - 6.7L** .

    No

    - Go To 3.

3. **CHECK THE EXHAUST DIFFERENTIAL PRESSURE SENSOR LINES**
    1. Inspect the Exhaust Differential Pressure Sensor tubes and hoses.

    Were any leaks or blockages found?

    Yes

    - Repair as necessary.
    - Perform the POWERTRAIN VERIFICATION TEST. Refer to **POWERTRAIN VERIFICATION TEST - 6.7L** .

    No

    - Go To 4.

4. **CHECK FOR EXHAUST SYSTEM LEAK**
    1. Perform the CHECKING THE EXHAUST SYSTEM FOR LEAKS diagnostic procedure. Refer to **DIAGNOSIS AND TESTING, 6.7L** .

    Were any exhaust leaks found?

    Yes

    - Repair the Exhaust System leak.
    - Perform the POWERTRAIN VERIFICATION TEST. Refer to **POWERTRAIN VERIFICATION TEST - 6.7L** .

    No

- Replace the Exhaust Differential Pressure Sensor in accordance with the service information.
- Perform the POWERTRAIN VERIFICATION TEST. Refer to **POWERTRAIN VERIFICATION TEST - 6.7L** .

P2454-DIESEL PARTICULATE FILTER PRESSURE SENSOR A CIRCUIT LOW

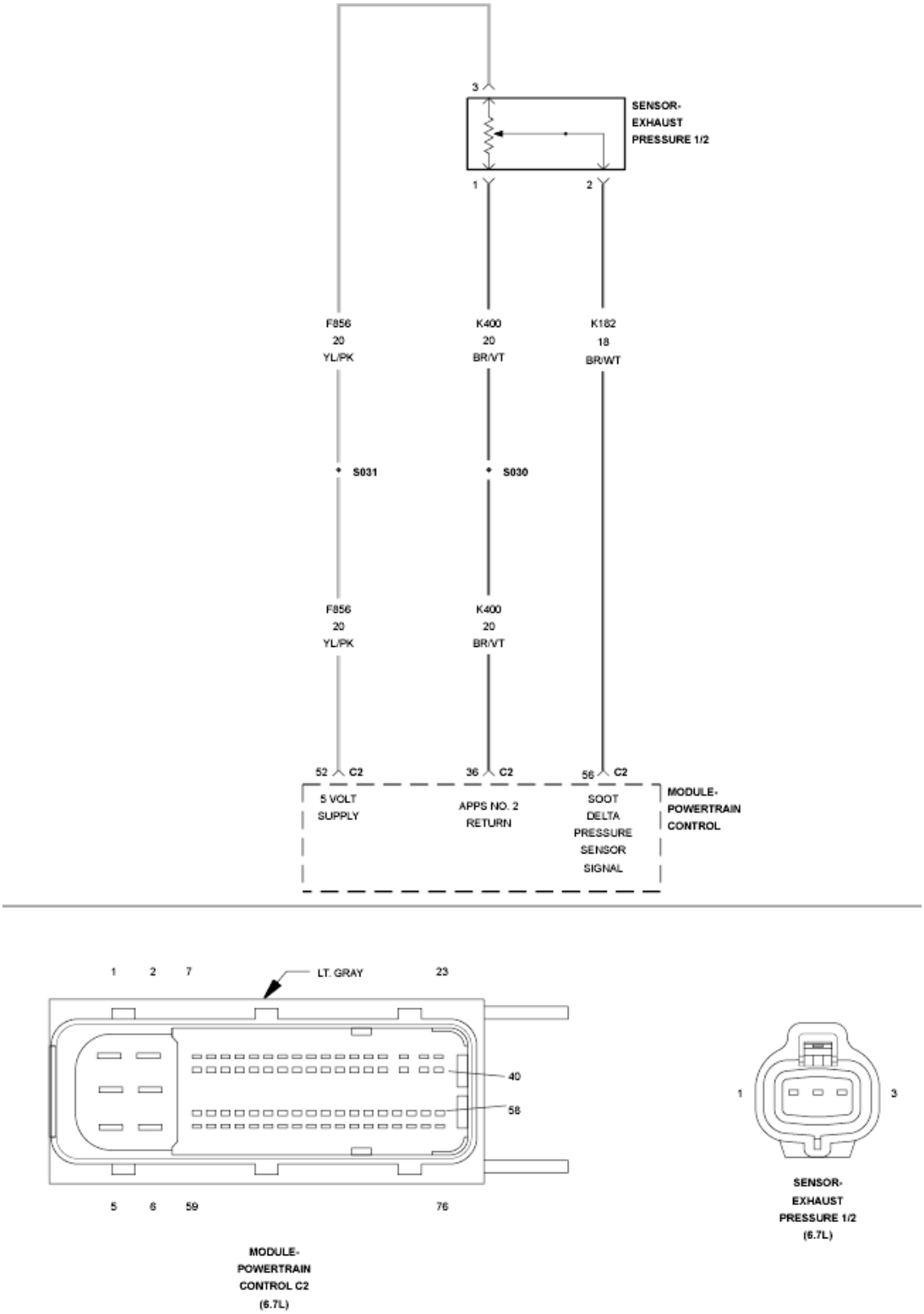

Fig. 33: Exhaust Pressure Sensor Circuit Schematic
Courtesy of CHRYSLER GROUP, LLC

For a complete wiring diagram, **refer to appropriate SYSTEM WIRING DIAGRAMS article** .

THEORY OF OPERATION

The Exhaust Differential Pressure Sensor (Exhaust Pressure Sensor 1/2) is used to detect the amount of soot and ash buildup inside the Diesel Particulate Filter. The Powertrain Control Module (PCM) provides a 5-Volt supply to the Exhaust Differential Pressure Sensor on the sensor supply circuit. The PCM also supplies a ground on the sensor return circuit. The Exhaust Differential Pressure Sensor provides a signal to the PCM on the Exhaust Differential Pressure Sensor Signal circuit. This sensor signal voltage changes based on the pressure differential across the Aftertreatment Diesel Particulate Filter. The PCM illuminates the MIL lamp immediately when the diagnostic runs and fails. A default value is used for the Aftertreatment Diesel Particulate Filter differential pressure reading. Active aftertreatment regeneration will be disabled. The PCM will turn off the MIL lamp immediately after the monitor runs and passes in four consecutive drive cycles.

WHEN MONITORED:

The monitor runs any time the PCM is powered up.

SET CONDITION:

The Powertrain Control Module (PCM) detects that the Exhaust Pressure Sensor 1/2 Signal voltage is less than 0.25 Volt for more than two seconds.

POSSIBLE CAUSES

Possible Causes
(K854) 5-VOLT SUPPLY CIRCUIT OPEN OR SHORTED TO GROUND
(K182) EXHAUST DIFFERENTIAL PRESSURE SENSOR SIGNAL CIRCUIT SHORTED TO GROUND
(K182) EXHAUST DIFFERENTIAL PRESSURE SENSOR SIGNAL CIRCUIT SHORTED TO THE (K400) APPS RETURN
EXHAUST DIFFERENTIAL PRESSURE SENSOR
POWERTRAIN CONTROL MODULE (PCM)

Always perform the Pre-Diagnostic Troubleshooting procedure before proceeding. Refer to PRE-DIAGNOSTIC TROUBLESHOOTING PROCEDURE - 6.7L .

DIAGNOSTIC TEST

1. **ACTIVE DTC**

NOTE: **If there are any 5-Volt supply DTCs present, repair those DTCs before proceeding with this test.**

1. Turn the ignition on.
2. With the scan tool, record all Freeze frame data.

3. With the scan tool, erase DTCs.
4. Turn the ignition off for 75 seconds.
5. Turn the ignition on.
6. With the scan tool, read DTCs.

   Did the DTC reset?

   Yes

   - Go To 2.

   No

   - Perform the INTERMITTENT CONDITION diagnostic procedure. Refer to **INTERMITTENT CONDITION - 6.7L** .

2. **CHECK THE (K182) EXHAUST DIFFERENTIAL PRESSURE SENSOR SIGNAL CIRCUIT FOR A SHORT TO GROUND**

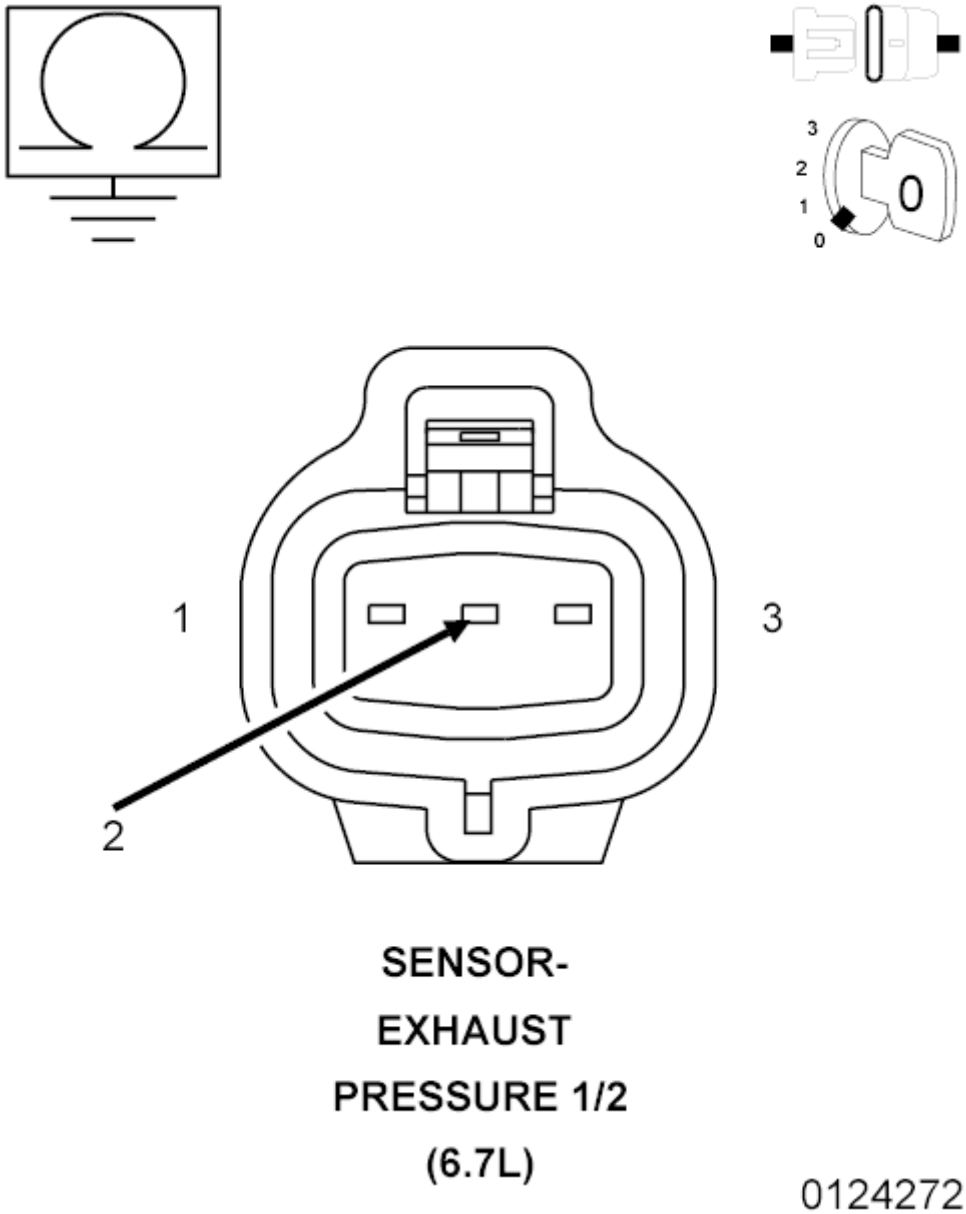

Fig. 34: Checking Exhaust Pressure Sensor 1/2 Signal Circuit For Short To Ground
Courtesy of CHRYSLER GROUP, LLC

1. Turn the ignition off.
2. Disconnect the Exhaust Differential Pressure Sensor harness connector.

NOTE: Check connectors - Clean/repair as necessary.

3. Measure the resistance between ground and the (K182) Exhaust Differential Pressure Sensor Signal circuit at the Exhaust Differential Pressure Sensor harness connector.

   Is the resistance below 10k Ohms?

Yes

- Repair the (K182) Exhaust Differential Pressure Sensor Signal circuit for a short to ground.
- Perform the POWERTRAIN VERIFICATION TEST. Refer to **POWERTRAIN VERIFICATION TEST - 6.7L** .

No

- Go To 3.

3. **CHECK FOR THE (K182) EXHAUST DIFFERENTIAL PRESSURE SENSOR SIGNAL CIRCUIT SHORTED TO THE (K400) APPS RETURN CIRCUIT**

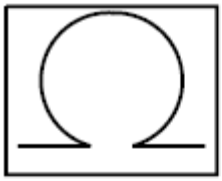

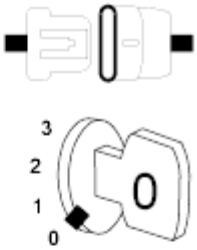

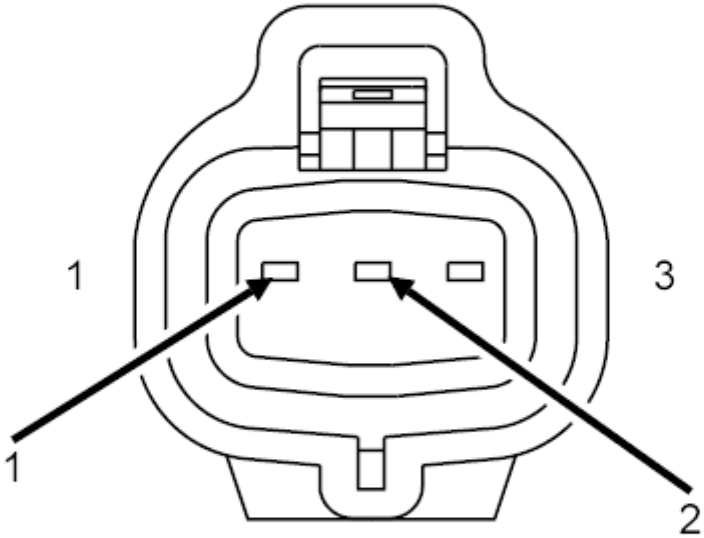

SENSOR-
EXHAUST
PRESSURE 1/2
(6.7L)

01242733

Fig. 35: Checking Exhaust Pressure Sensor 1/2 Signal Circuit For Short To APPS Return
Courtesy of CHRYSLER GROUP, LLC

1. Measure the resistance between the (K182) Exhaust Differential Pressure Sensor Signal circuit and the (K400) APPS Return circuit at the Exhaust Differential Pressure Sensor harness connector.

   Is the resistance below 10k Ohms?

   Yes

   - Repair the short between the (K182) Exhaust Differential Pressure Sensor Signal circuit and the (K400) APPS Return circuit.
   - Perform the POWERTRAIN VERIFICATION TEST. Refer to **POWERTRAIN VERIFICATION TEST - 6.7L** .

   No

   - Go To 4.

4. **CHECK THE EXHAUST DIFFERENTIAL PRESSURE SENSOR**
   1. Reconnect the Exhaust Differential Pressure Sensor harness connector.
   2. Ignition on, engine not running.
   3. With the scan tool, erase DTCs.
   4. While monitoring the scan tool, disconnect the Exhaust Differential Pressure Sensor harness connector.

      Did the DTC P2455 become active?

      Yes

      - Replace the Exhaust Differential Pressure Sensor in accordance with the service information.
      - Perform the POWERTRAIN VERIFICATION TEST. Refer to **POWERTRAIN VERIFICATION TEST - 6.7L** .

      No

      - Replace the Powertrain Control Module in accordance with the service information.
      - Perform the POWERTRAIN VERIFICATION TEST. Refer to **POWERTRAIN VERIFICATION TEST - 6.7L** .

P2455-DIESEL PARTICULATE FILTER PRESSURE SENSOR A CIRCUIT HIGH

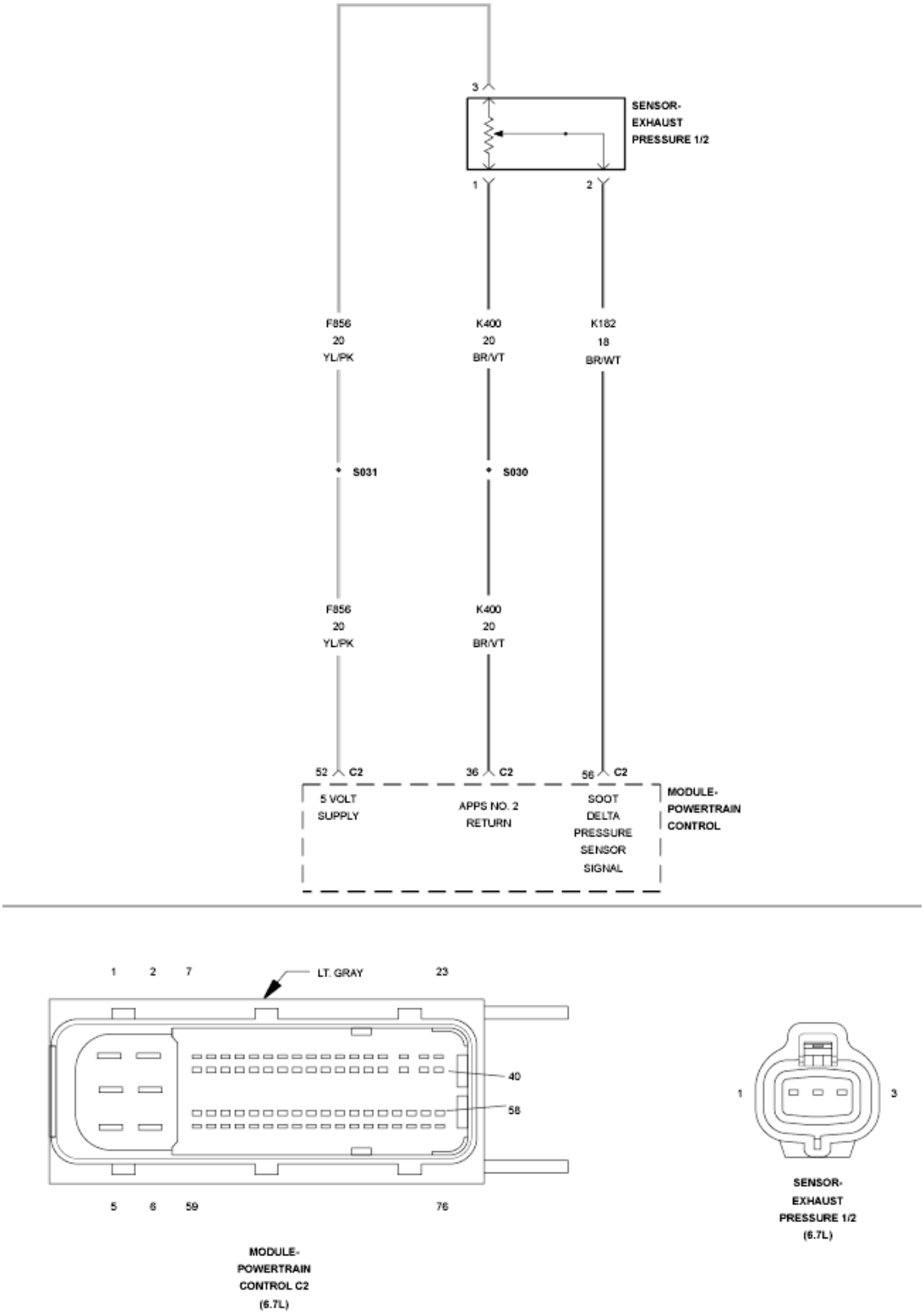

Fig. 36: Exhaust Pressure Sensor Circuit Schematic
Courtesy of CHRYSLER GROUP, LLC

For a complete wiring diagram, **refer to appropriate SYSTEM WIRING DIAGRAMS article** .

THEORY OF OPERATION

The Exhaust Differential Pressure Sensor (Exhaust Pressure Sensor 1/2) is used to detect the amount of soot and ash buildup inside the Diesel Particulate Filter. The Powertrain Control Module (PCM) provides a 5-Volt Supply to the Exhaust Differential Pressure Sensor. The PCM also supplies a ground on the sensor return circuit. The Exhaust Differential Pressure Sensor provides a signal to the PCM on the Exhaust Differential Pressure Sensor Signal circuit. This sensor signal voltage changes based on the pressure differential across the aftertreatment Diesel Particulate Filter. The PCM illuminates the MIL lamp immediately when the diagnostic runs and fails. A default value is used for the aftertreatment Diesel Particulate Filter differential pressure reading. Active aftertreatment regeneration will be disabled. The PCM will turn off the MIL lamp immediately after the diagnostic runs and passes.

WHEN MONITORED:

with the ignition on.

SET CONDITION:

The Powertrain Control Module (PCM) detects that the Exhaust Differential Pressure Sensor Signal voltage is greater than calibrated voltage for more than a calibrated duration.

POSSIBLE CAUSES

Possible Causes
(K854) 5-VOLT SUPPLY CIRCUIT SHORTED TO VOLTAGE
(K182) EXHAUST DIFFERENTIAL PRESSURE SENSOR SIGNAL CIRCUIT SHORTED TO VOLTAGE
(K182) EXHAUST DIFFERENTIAL PRESSURE SENSOR SIGNAL CIRCUIT SHORTED TO THE (K854) 5-VOLT SUPPLY CIRCUIT
(K182) EXHAUST DIFFERENTIAL PRESSURE SENSOR SIGNAL CIRCUIT OPEN
(K400) APPS RETURN CIRCUIT OPEN
EXHAUST DIFFERENTIAL PRESSURE SENSOR
POWERTRAIN CONTROL MODULE (PCM)

Always perform the Pre-Diagnostic Troubleshooting procedure before proceeding. Refer to PRE-DIAGNOSTIC TROUBLESHOOTING PROCEDURE - 6.7L .

DIAGNOSTIC TEST

1. **ACTIVE DTC**

NOTE: **If there are any 5-Volt supply DTCs present, repair those DTCs before proceeding with this test.**

1. Turn the ignition on.
2. With the scan tool, record all Freeze frame data.
3. With the scan tool, erase DTCs.
4. Turn the ignition off for 75 seconds.
5. Turn the ignition on.
6. With the scan tool, read DTCs.

Did the DTC reset?

Yes

- Go To 2.

No

- Perform the INTERMITTENT CONDITION diagnostic procedure. Refer to **INTERMITTENT CONDITION - 6.7L** .

2. **CHECK THE (K182) EXHAUST DIFFERENTIAL PRESSURE SENSOR SIGNAL CIRCUIT FOR A SHORT TO VOLTAGE**

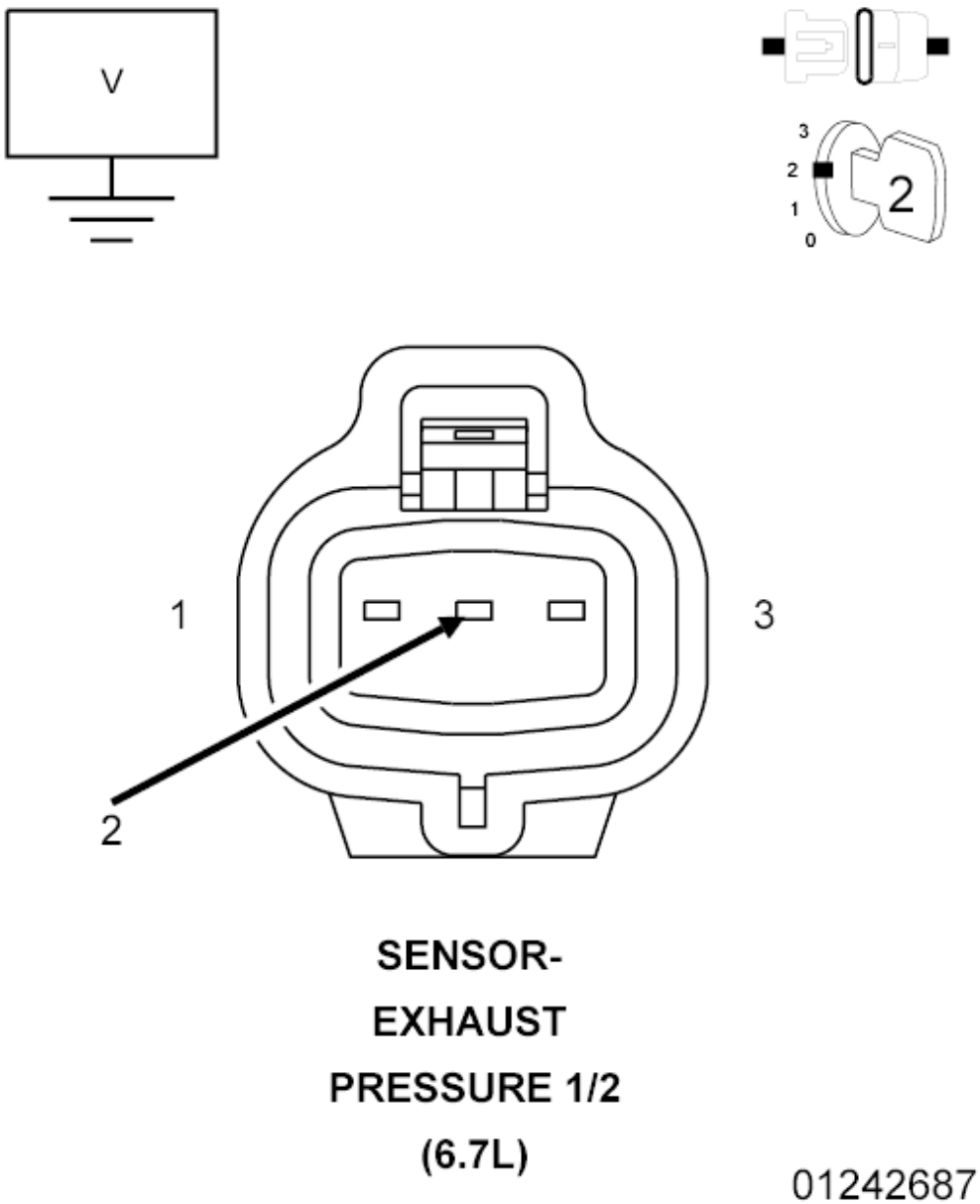

Fig. 37: Checking Exhaust Pressure Sensor 1/2 Signal Circuit For Short To Voltage
Courtesy of CHRYSLER GROUP, LLC

1. Turn the ignition off.
2. Disconnect the Exhaust Differential Pressure Sensor harness connector.

NOTE: Check connectors - Clean/repair as necessary.

3. Turn the ignition on.
4. Measure the voltage on the (K182) Exhaust Differential Pressure Sensor Signal circuit at the Exhaust Differential Pressure Sensor harness connector.

Is the voltage reading above 5.1 Volts?

Yes

- Repair the (K182) Exhaust Differential Pressure Sensor Signal circuit for a short to voltage.
- Perform the POWERTRAIN VERIFICATION TEST. Refer to **POWERTRAIN VERIFICATION TEST - 6.7L** .

No

- Go To 3.

3. **CHECK FOR THE (K182) EXHAUST DIFFERENTIAL PRESSURE SENSOR SIGNAL CIRCUIT SHORTED TO THE (K854) 5-VOLT SUPPLY CIRCUIT**

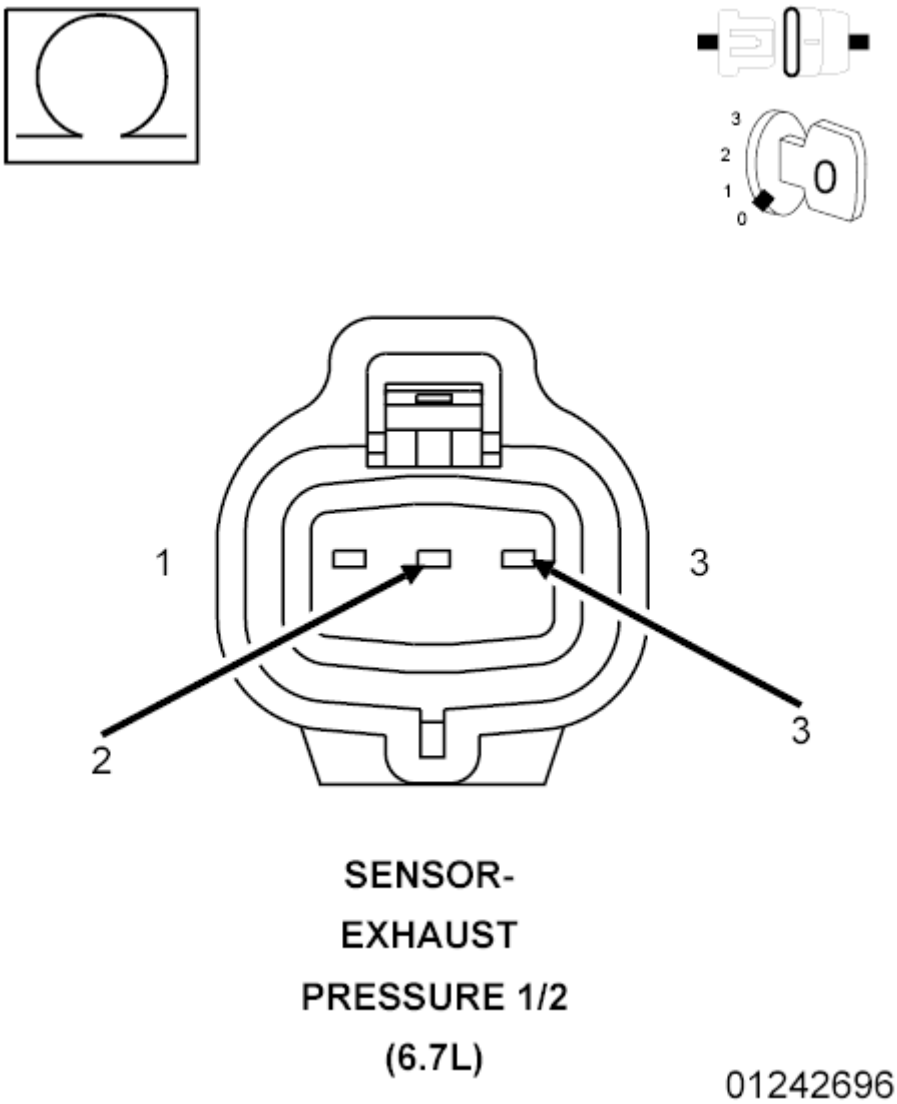

Fig. 38: Checking Exhaust Pressure Sensor 1/2 Signal Circuit For Short To 5-Volt Supply Circuit

1. Turn the ignition off.
2. Disconnect the PCM C2 harness connector.
3. Measure the resistance between the (K182) Exhaust Differential Pressure Sensor Signal circuit and the (K854) 5-Volt Supply circuit at the Exhaust Differential Pressure Sensor harness connector.

   Is the resistance below 10k Ohms?

   Yes

   - Repair the short between the (K182) Exhaust Differential Pressure Sensor Signal circuit and the (K854) 5-Volt Supply circuit.
   - Perform the POWERTRAIN VERIFICATION TEST. Refer to **POWERTRAIN VERIFICATION TEST - 6.7L** .

   No

   - Go To 4.

4. **CHECK THE (K182) EXHAUST DIFFERENTIAL PRESSURE SENSOR SIGNAL CIRCUIT FOR AN OPEN/HIGH RESISTANCE**
   1. Measure the resistance of the (K182) Exhaust Differential Pressure Sensor Signal circuit between the PCM C2 harness connector to the Exhaust Differential Pressure Sensor harness connector.

      Is the resistance below 5.0 Ohms?

      Yes

      - Repair the (K182) Exhaust Differential Pressure Sensor Signal circuit for an open or high resistance.
      - Perform the POWERTRAIN VERIFICATION TEST. Refer to **POWERTRAIN VERIFICATION TEST - 6.7L** .

      No

      - Go To 5.

5. **CHECK THE (K400) APPS RETURN CIRCUIT FOR AN OPEN/HIGH RESISTANCE**
   1. Measure the resistance of the (K400) APPS Return circuit between the PCM C2 harness connector to the Exhaust Differential Pressure Sensor harness connector.

      Is the resistance below 5.0 Ohms?

      Yes

      - Repair the (K400) APPS Return circuit for an open or high resistance.

- Perform the POWERTRAIN VERIFICATION TEST. Refer to **POWERTRAIN VERIFICATION TEST - 6.7L** .

No

- Go To 6.

6. **CHECK THE EXHAUST DIFFERENTIAL PRESSURE SENSOR**
   1. Reconnect the PCM C2 harness connector.
   2. Ignition on, engine not running.
   3. Leave the Exhaust Differential Pressure Sensor harness connector disconnected.
   4. While monitoring the scan tool, connect a jumper between the (K182) Exhaust Differential Pressure Sensor Signal circuit and the (K400) APPS Return circuit in the Exhaust Pressure Sensor 1/2 harness connector.

      Did the DTC P2454 Pressure Sensor Low become active?

      Yes

      - Replace the Exhaust Differential Pressure Sensor in accordance with the service information.
      - Perform the POWERTRAIN VERIFICATION TEST. Refer to **POWERTRAIN VERIFICATION TEST - 6.7L** .

      No

      - Replace the Powertrain Control Module in accordance with the service information.
      - Perform the POWERTRAIN VERIFICATION TEST. Refer to **POWERTRAIN VERIFICATION TEST - 6.7L** .

P2457-EXHAUST GAS RECIRCULATION COOLING SYSTEM PERFORMANCE

For a complete wiring diagram, **refer to appropriate SYSTEM WIRING DIAGRAMS article** .

THEORY OF OPERATION

This test will fail if the EGR Temperature is greater than a calibrated threshold for a calibrated period of time. This monitor protects the system from a failed EGR Cooler.

WHEN MONITORED:

With the engine running.

SET CONDITION:

Exhaust gas recirculation temperature sensor is reading higher than a calibrated value for more than five seconds.

POSSIBLE CAUSES

Possible Causes
COOLANT TEMP DTCS
EGR VALVE DTCS
ENGINE OR FUEL MODIFICATIONS THAT EXCEED OEM SPECIFICATIONS
FUEL SYSTEM DTCS
EGR TEMPERATURE SENSOR
EGR COOLER FOULING

Always perform the Pre-Diagnostic Troubleshooting procedure before proceeding. Refer to PRE-DIAGNOSTIC TROUBLESHOOTING PROCEDURE - 6.7L .

DIAGNOSTIC TEST

1. **OTHER DTCS**
   1. Ignition on, engine not running.
   2. With the scan tool, read DTCs.

      Are there any coolant temperature, fuel system or EGR Valve DTCs?

      Yes

      - Repair other DTCs before proceeding.
      - Perform the POWERTRAIN VERIFICATION TEST. Refer to **POWERTRAIN VERIFICATION TEST - 6.7L** .

      No

      - Go To 2.
2. **ACTIVE DTC**

   NOTE: If there are any 5-Volt supply DTCs present, repair those DTCs before proceeding with this test.

   1. Turn the ignition on.
   2. With the scan tool, record all Freeze frame data.
   3. With the scan tool, erase DTCs.
   4. Turn the ignition off for 30 seconds.
   5. Start the engine. It may be necessary to test drive the vehicle.
   6. With the scan tool, read DTCs.

      Did the DTC reset?

Yes

- Go To 3.

No

- Perform the INTERMITTENT CONDITION diagnostic procedure. Refer to **INTERMITTENT CONDITION - 6.7L** .

3. **CHECK FOR ENGINE OR FUEL MODIFICATIONS THAT EXCEED OEM SPECIFICATIONS**
   1. Inspect vehicle/engine for signs of Engine or Fuel modifications that exceed OEM specifications.

      Are there signs the customer installed a modification kit that exceed OEM specifications?

      Yes

      - Return vehicle to customer. Explain that modifying the engine hardware/software may cause the engine to run outside of its normal operating limits.

      No

      - Go To 4.

4. **CHECK THE EXHAUST GAS RECIRCULATION TEMPERATURE SENSOR**
   1. Turn the ignition off.
   2. Disconnect the EGR Temperature Sensor harness connector.

      NOTE: Check connectors - Clean/repair as necessary.

   3. Remove the Temperature Sensor and reconnect the wiring harness connector to the sensor.
   4. Turn the Ignition on, engine off.
   5. Monitor scan tool, while heating the sensor with an external heat source (DO NOT USE OPEN FLAME).

      Does the reading from the sensor increase at least 2.78° C (5° F) on the scan tool?

      Yes

      - Go To 5.

      No

      - Replace the EGR Temperature Sensor in accordance with the service information.
      - Perform the POWERTRAIN VERIFICATION TEST. Refer to **POWERTRAIN VERIFICATION TEST - 6.7L** .

5. **EGR COOLER**

1. Remove and clean the EGR Cooler with approved Mopar EGR system cleaner.
2. Reinstall the EGR Cooler.
3. With the scan tool, erase DTCs.
4. Turn the ignition off for 75 seconds.
5. Start the engine. It may be necessary to test drive the vehicle.
6. With the scan tool, read DTCs.

   Did the DTC reset?

   Yes

   - Replace the EGR Cooler in accordance with the service information.
   - Perform the POWERTRAIN VERIFICATION TEST. Refer to **POWERTRAIN VERIFICATION TEST - 6.7L** .

   No

   - Repair complete.

P2459-DIESEL PARTICULATE FILTER REGENERATION TOO FREQUENT

For a complete wiring diagram, **refer to appropriate SYSTEM WIRING DIAGRAMS article** .

THEORY OF OPERATION

The engine aftertreatment system monitors the soot load in the Diesel Particulate Filter. Under normal operating conditions the Diesel Particulate Filter is self-cleaning, where soot is converted to ash. The soot load in the aftertreatment Diesel Particulate Filter is estimated using the Exhaust Differential Pressure Sensor and the calculated soot output of the engine. The Powertrain Control Module (PCM) will set this fault if it detects that the time between two regeneration events is less than the calibrated time threshold. The PCM will illuminate the MIL lamp immediately when the diagnostic runs and fails. The driver will be notified via the vehicle's EVIC Message Center. The PCM will turn off the MIL lamp immediately after the soot load has dropped below the Moderately Severe Level Threshold.

WHEN MONITORED:

The diagnostic runs continuously when the engine is running.

SET CONDITION:

If between two Diesel Particular Filter regeneration events, the DPF soot loading rate is faster than the threshold or if the time between two regeneration events is less than the calibrated time threshold.

POSSIBLE CAUSES

Possible Causes

FUEL SYSTEM OR AIR HANDLING SYSTEM SENSOR FAILURE
BASE ENGINE FAILURE
FUEL SYSTEM FAILURE
AIR HANDLING SYSTEM FAILURE
DIESEL PARTICULATE FILTER RESTRICTED

Always perform the Pre-Diagnostic Troubleshooting procedure before proceeding. Refer to PRE-DIAGNOSTIC TROUBLESHOOTING PROCEDURE - 6.7L .

DIAGNOSTIC TEST

1. **OTHER RELATED DTCS**
   1. Turn the ignition on.
   2. With the scan tool, read DTCs.

      Were there any fuel system or air handling sensor DTCs present?

      Yes

      - If this DTC is present along with any fuel system or air handling system sensor DTCs, repair those DTCs before proceeding.
      - Perform the POWERTRAIN VERIFICATION TEST. Refer to **POWERTRAIN VERIFICATION TEST - 6.7L** .

      No

      - Go To 2.
2. **CHECK THE ENGINE PERFORMANCE**
   1. Perform the CHECKING ENGINE MISFIRE / RUNS ROUGH / PERFORMANCE TEST diagnostic procedure. Refer to **DIAGNOSIS AND TESTING, 6.7L** .

      Were any problems found?

      Yes

      - Perform the appropriate repair.
      - Perform the DIESEL AFTERTREATMENT VALIDATION - 6.7L procedure. Refer to **DIESEL AFTERTREATMENT VALIDATION- 6.7L** .

      No

      - Go To 3.
3. **CHECK FOR THE DIESEL PARTICULATE FILTER DAMAGED**
   1. Perform the AFTERTREATMENT INSPECTION GUIDELINE - 6.7L procedure. Refer to

DIAGNOSIS AND TESTING, 6.7L .

Was any internal damage found in the Diesel Particulate Filter?

Yes

- Replace the Diesel Particulate Filter in accordance with the service information.
- Perform the DIESEL AFTERTREATMENT VALIDATION - 6.7L procedure. Refer to **DIESEL AFTERTREATMENT VALIDATION- 6.7L** .

No

- Reinstall the exhaust and perform the INTERMITTENT CONDITION - 6.7L. Refer to **INTERMITTENT CONDITION - 6.7L** .

P2463-DIESEL PARTICULATE FILTER - SOOT ACCUMULATION

For a complete wiring diagram, **refer to appropriate SYSTEM WIRING DIAGRAMS article** .

THEORY OF OPERATION

The engine aftertreatment system monitors the soot load in the Diesel Particulate Filter. Under normal operating conditions the Diesel Particulate Filter is self-cleaning, where soot is converted to ash. The soot load in the Diesel Particulate Filter is estimated using the Exhaust Differential Pressure Sensor and the calculated soot output of the engine. This fault code can be triggered if the application is not operating at a duty cycle high enough to actively regenerate the Diesel Particulate Filter. It may be necessary to increase the duty cycle of the application in order to prevent excessive soot accumulation and plugging of the Diesel Particulate Filter. The Powertrain Control Module (PCM) will set this fault if it detects that the Diesel Particulate Filter is above the calibrated moderately severe threshold limit. The PCM will illuminate the MIL lamp immediately when the diagnostic runs and fails. The driver will be notified via the vehicle's EVIC Message Center. The PCM will turn off the MIL lamp immediately after the soot load has dropped below the Moderately Severe Level Threshold.

WHEN MONITORED:

The diagnostic runs continuously when the engine is running.

SET CONDITION:

The Powertrain Control Module (PCM) will set this fault if it detects that the soot load in the Diesel Particulate Filter is above the moderately severe level threshold limit.

POSSIBLE CAUSES

Possible Causes
DIESEL PARTICULATE FILTER PLUGGED
EXHAUST TEMPERATURES NOT HIGH ENOUGH TO ACTIVELY REGENERATE THE DIESEL PARTICULATE FILTER.

DAMAGE TO THE AFTERTREATMENT SYSTEM FROM AN ENGINE FAILURE
EXHAUST TEMPERATURE SENSORS FAILED IN-RANGE LOW
EXHAUST DIFFERENTIAL PRESSURE SENSOR FAILED IN-RANGE HIGH

Always perform the Pre-Diagnostic Troubleshooting procedure before proceeding. Refer to PRE-DIAGNOSTIC TROUBLESHOOTING PROCEDURE - 6.7L .

DIAGNOSTIC TEST

1. **ACTIVE OR STORED DTC**

NOTE: **DTC P2463 is usually the result of a driveability or fuel system failure. This DTC indicates that there is an excessive soot level in the Diesel Particulate Filter, and that the Diesel Particulate Filter needs to be regenerated. This can be caused by the customers driving habits, (not allowing the vehicle to actively regenerate the Diesel Particulate Filter on it's own), or due to a driveability concern causing excessive soot generation in the exhaust system. If there are any other DTCs or driveability concerns present with this DTC, diagnose and repair those concerns before continuing with this test procedure. Not repairing the cause of the excess soot being generated will cause the Diesel Particulate Filter to fill with soot too often, and this DTC to return prematurely.**

1. Ignition on, engine not running.
2. With the scan tool, read DTCs.

Is the DTC Active or Stored?

Active

- Perform a scan tool initiated Stationary Desoot. Refer to **FILTER, DIESEL PARTICULATE, STANDARD PROCEDURE** .

NOTE: **The Mobile Desoot procedure has been replaced by a scan tool initiated Stationary Desoot procedure. The scan tool initiated Stationary Desoot procedure can only be performed if the DTC is active and the PCM is at the latest software version.**

- Go To 2.

Stored

- The Diesel Particulate Filter has been regenerated with an active desoot initiated during normal driving conditions.
- Perform the DIESEL AFTERTREATMENT VALIDATION - 6.7L procedure. Refer to **DIESEL AFTERTREATMENT VALIDATION- 6.7L** .

2. **AFTERTREATMENT INSPECTION**
    1. Perform the AFTERTREATMENT INSPECTION GUIDELINE - 6.7L procedure. Refer to **DIAGNOSIS AND TESTING, 6.7L** .

       Did the Diesel Particulate Filter pass inspection?

       Yes

       - Repair complete. Reset DPF timer, ensure all other fault codes have been addressed.
       - Perform the DIESEL AFTERTREATMENT VALIDATION - 6.7L procedure. Refer to **DIESEL AFTERTREATMENT VALIDATION- 6.7L** .

       No

       - Replace the Diesel Particulate Filter in accordance with the service information.
       - Perform the DIESEL AFTERTREATMENT VALIDATION - 6.7L procedure. Refer to **DIESEL AFTERTREATMENT VALIDATION- 6.7L** .

P246F-EXHAUST GAS TEMP SENSOR CIRCUIT PERFORMANCE - BANK 1 SENSOR 4

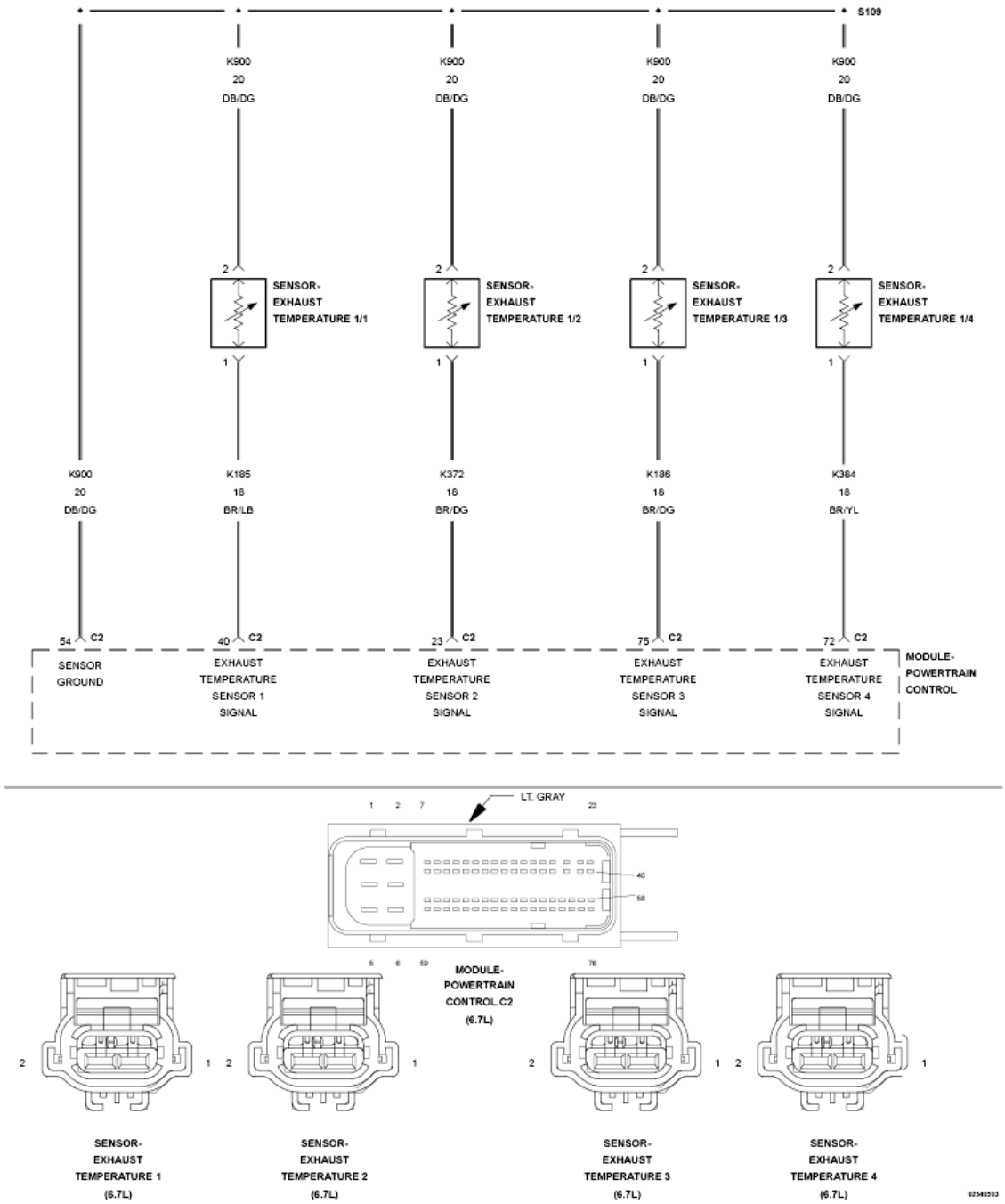

Fig. 39: Exhaust Gas Temperature Sensor Circuit Schematic
Courtesy of CHRYSLER GROUP, LLC

For a complete wiring diagram, **refer to appropriate SYSTEM WIRING DIAGRAMS article** .

THEORY OF OPERATION

The Exhaust Temperature Sensors are used by the Powertrain Control Module (PCM) to monitor the engine exhaust temperatures in the aftertreatment system. The Exhaust Temperature Sensors are thermistors and change resistance based on the temperature being measured. The Exhaust Temperature Sensors receive a 5-Volt

signal from the PCM and share a sensor ground. The PCM monitors the change in signal voltage and converts this to a temperature value. The PCM illuminates the MIL lamp immediately when the diagnostic runs and fails. A default value will be used for the Exhaust Temperature Sensor 1/3 and active regeneration of the diesel particulate filter will be disabled. The PCM will turn off the MIL lamp immediately after the diagnostic runs and passes.

WHEN MONITORED:

With the engine running.

SET CONDITION:

The Powertrain Control Module (PCM) detects that the Exhaust Temperature Sensor 1/4 reading is not increasing with engine operating temperature after engine startup.

POSSIBLE CAUSES

Possible Causes
EXHAUST TEMPERATURE SENSOR 1/4
WIRING HARNESS OR CONNECTION

Always perform the Pre-Diagnostic Troubleshooting procedure before proceeding. Refer to PRE-DIAGNOSTIC TROUBLESHOOTING PROCEDURE - 6.7L .

DIAGNOSTIC TEST

1. **OTHER DTCS PRESENT**
    1. Turn the ignition on.
    2. With the scan tool, read DTCs.

       Are either of the Exhaust Temperature Sensor 1/4 Low or High DTCs present?

       Yes

       - Repair the other DTCs before proceeding.
       - Perform the POWERTRAIN VERIFICATION TEST. Refer to **POWERTRAIN VERIFICATION TEST - 6.7L** .

       No

       - Go To 2.
2. **EXHAUST TEMPERATURE SENSOR 1/4**
    1. Remove the Exhaust Temperature Sensor 1/4 and reconnect the harness connector to the sensor. Monitor the scan tool, while heating the sensor with an external heat source (DO NOT USE OPEN FLAME).

Does the reading from the sensor increase at least 5°F on the scan tool?

Yes

- Perform the INTERMITTENT CONDITION diagnostic procedure. Refer to **INTERMITTENT CONDITION - 6.7L** .

No

- Replace the Exhaust Temperature Sensor 1/4 in accordance with the service information.
- Perform the POWERTRAIN VERIFICATION TEST. Refer to **POWERTRAIN VERIFICATION TEST - 6.7L** .

P2470-EXHAUST GAS TEMPERATURE SENSOR CIRCUIT LOW - BANK 1 SENSOR 4

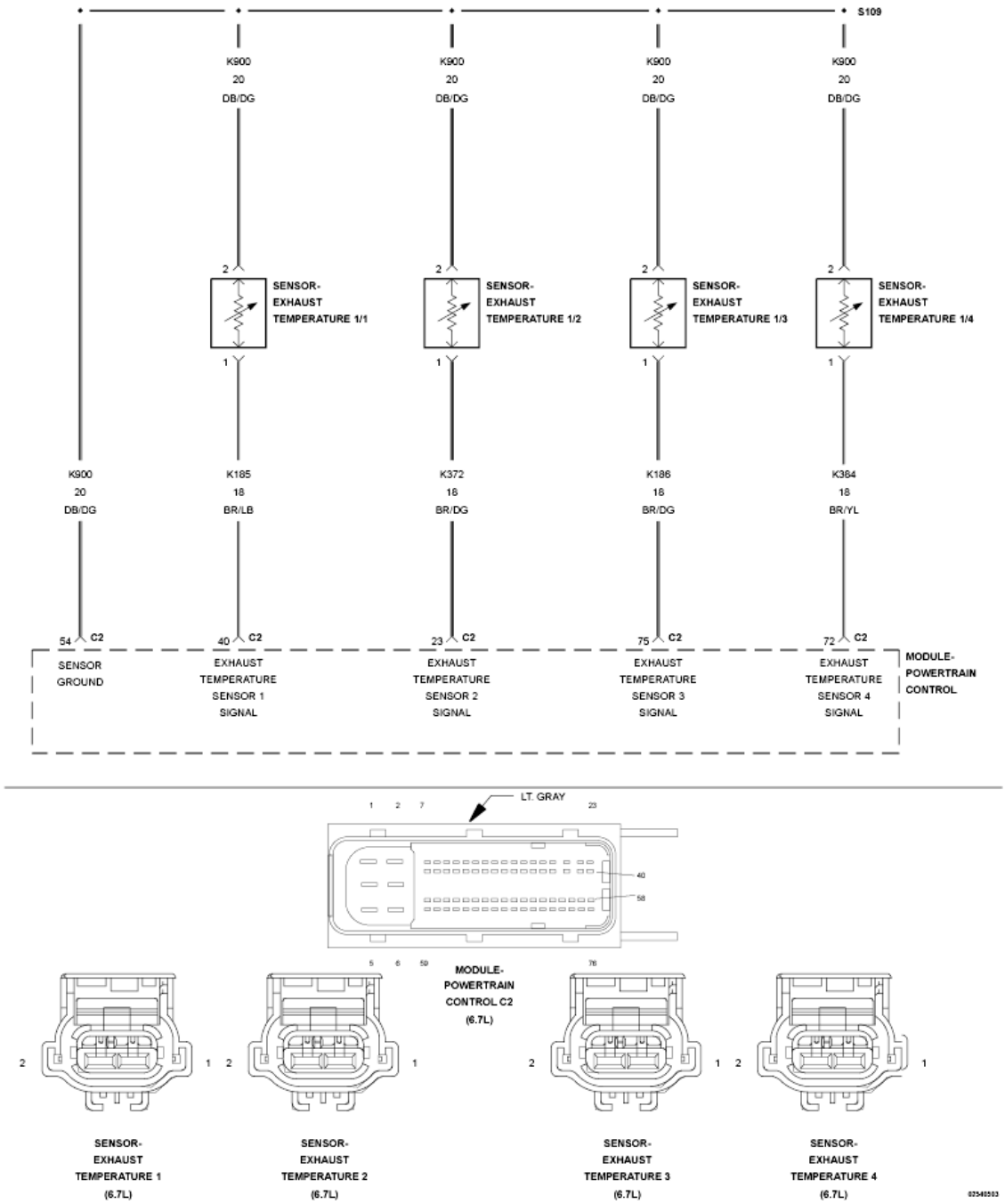

Fig. 40: Exhaust Gas Temperature Sensor Circuit Schematic
Courtesy of CHRYSLER GROUP, LLC

For a complete wiring diagram, **refer to appropriate SYSTEM WIRING DIAGRAMS article** .

THEORY OF OPERATION

The Exhaust Temperature Sensors are used by the Powertrain Control Module (PCM) to monitor the engine exhaust temperatures in the aftertreatment system. The Exhaust Temperature Sensors are thermistors and change resistance based on the temperature being measured. The Exhaust Temperature Sensors receive a 5-Volt

signal from the PCM and share a sensor ground. The PCM monitors the change in signal voltage and converts this to a temperature value. The PCM illuminates the MIL lamp immediately when the diagnostic runs and fails. A default value will be used for the Exhaust Temperature Sensor 1/4 and active regeneration of the diesel particulate filter will be disabled. The PCM will turn off the MIL lamp immediately after the diagnostic runs and passes.

WHEN MONITORED:

With the ignition on.

SET CONDITION:

The Exhaust Temperature Sensor Signal 1/4 circuit is below 0.25 of a Volt for 15.0 seconds.

POSSIBLE CAUSES

Possible Causes
(K384) EXHAUST GAS TEMPERATURE 1/4 SENSOR SIGNAL CIRCUIT SHORTED TO GROUND
(K384) EXHAUST GAS TEMPERATURE 1/4 SENSOR SIGNAL CIRCUIT SHORTED TO THE (K900) SENSOR GROUND CIRCUIT
EXHAUST GAS TEMPERATURE 1/4 SENSOR
POWERTRAIN CONTROL MODULE (PCM)

Always perform the Pre-Diagnostic Troubleshooting procedure before proceeding. Refer to PRE-DIAGNOSTIC TROUBLESHOOTING PROCEDURE - 6.7L .

DIAGNOSTIC TEST

1. **ACTIVE DTC**
    1. Turn the ignition on.
    2. With the scan tool, record all Freeze frame data.
    3. With the scan tool, erase DTCs.
    4. Turn the ignition off for 75 seconds.
    5. Turn the ignition on.
    6. With the scan tool, read DTCs.

    Did the DTC reset?

    Yes

    - Go To 2.

    No

    - Perform the INTERMITTENT CONDITION diagnostic procedure. Refer to

INTERMITTENT CONDITION - 6.7L .

2. **CHECK THE (K384) EXHAUST TEMPERATURE 1/4 SIGNAL CIRCUIT FOR A SHORT TO GROUND**

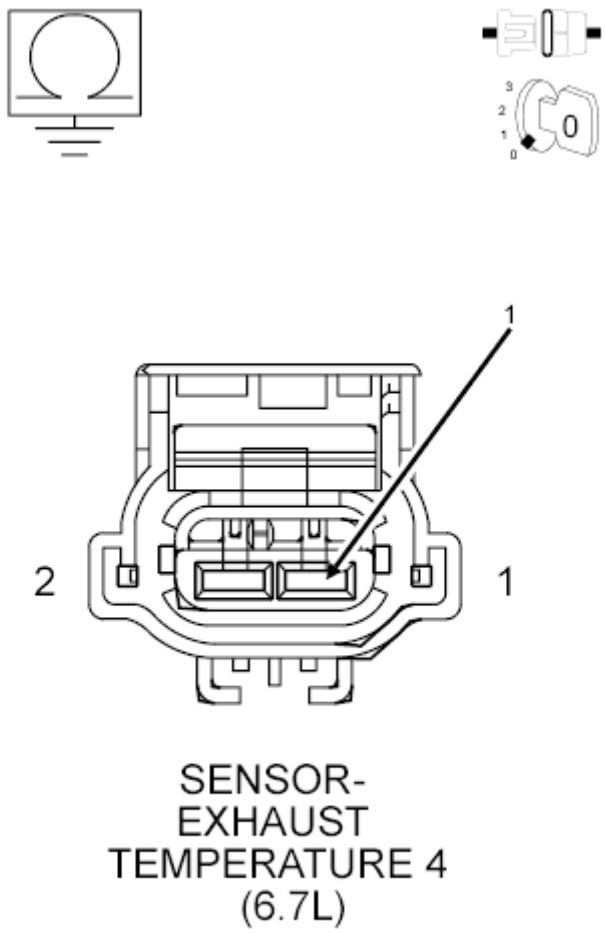

Fig. 41: Checking Exhaust Temperature 1/4 Signal Circuit For Short To Ground
Courtesy of CHRYSLER GROUP, LLC

1. Turn the ignition off.
2. Disconnect the Exhaust Gas Temperature Sensor 1/4 harness connector.
3. Disconnect the PCM C2 harness connector.
4. Measure the resistance between ground and the (K384) Exhaust Gas Temperature Sensor 1/4 Signal circuit at the sensor Exhaust Gas Temperature 1/4 harness connector.

   Is the resistance below 10k Ohms?

   Yes

   - Go To 3.

No

- Repair the short to ground in the (K384) Exhaust Gas Temperature Sensor 1/4 Signal circuit.
- Perform the POWERTRAIN VERIFICATION TEST. Refer to **POWERTRAIN VERIFICATION TEST - 6.7L** .

3. **CHECK FOR THE (K384) EXHAUST TEMPERATURE 1/4 SIGNAL CIRCUIT SHORTED TO THE (K900) SENSOR GROUND**

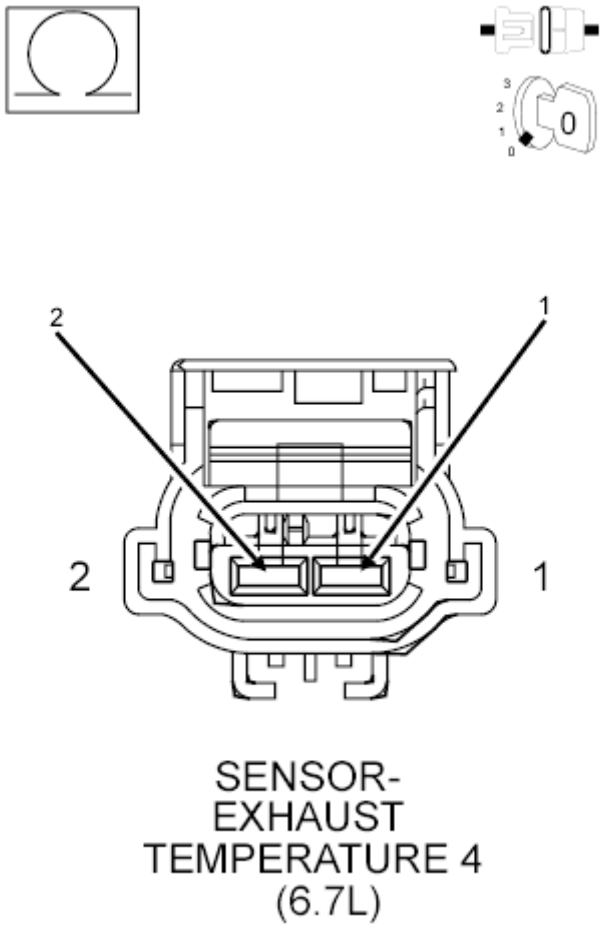

Fig. 42: Checking For Exhaust Temperature 1/4 Signal Circuit Shorted To Sensor Ground
Courtesy of CHRYSLER GROUP, LLC

1. Measure the resistance between the (K384) Exhaust Gas Temperature Sensor 1/4 Signal circuit and (K900) Sensor Ground circuit at the Exhaust Gas Temperature Sensor 1/4 harness connector.

   Is the resistance below 10k Ohms?

   Yes

   - Repair the short between the (K384) Exhaust Gas Temperature Sensor 1/4 Signal circuit and

(K900) Sensor Ground circuit.

- Perform the POWERTRAIN VERIFICATION TEST. Refer to **POWERTRAIN VERIFICATION TEST - 6.7L** .

No

- Go To 4.

4. **CHECK THE EXHAUST GAS TEMPERATURE SENSOR**
    1. Reconnect the Exhaust Gas Temperature Sensor 1/4 harness connector.
    2. Reconnect the PCM C2 harness connector.
    3. Turn the ignition on.
    4. With the scan tool, erase DTCs.
    5. Turn the ignition off for 75 seconds.
    6. Disconnect the Exhaust Gas Temperature Sensor 1/4 harness connector.
    7. Turn the ignition on.
    8. With the scan tool, read DTCs.

    Does the DTC P2471 become active?

    Yes

    - Replace the Exhaust Gas Temperature Sensor 1/4 in accordance with the service information.
    - Perform the POWERTRAIN VERIFICATION TEST. Refer to **POWERTRAIN VERIFICATION TEST - 6.7L** .

    No

    - Replace the Powertrain Control Module in accordance with the service information.
    - Perform the POWERTRAIN VERIFICATION TEST. Refer to **POWERTRAIN VERIFICATION TEST - 6.7L** .

P242D-EXHAUST GAS TEMPERATURE SENSOR CIRCUIT HIGH - BANK 1 SENSOR 4

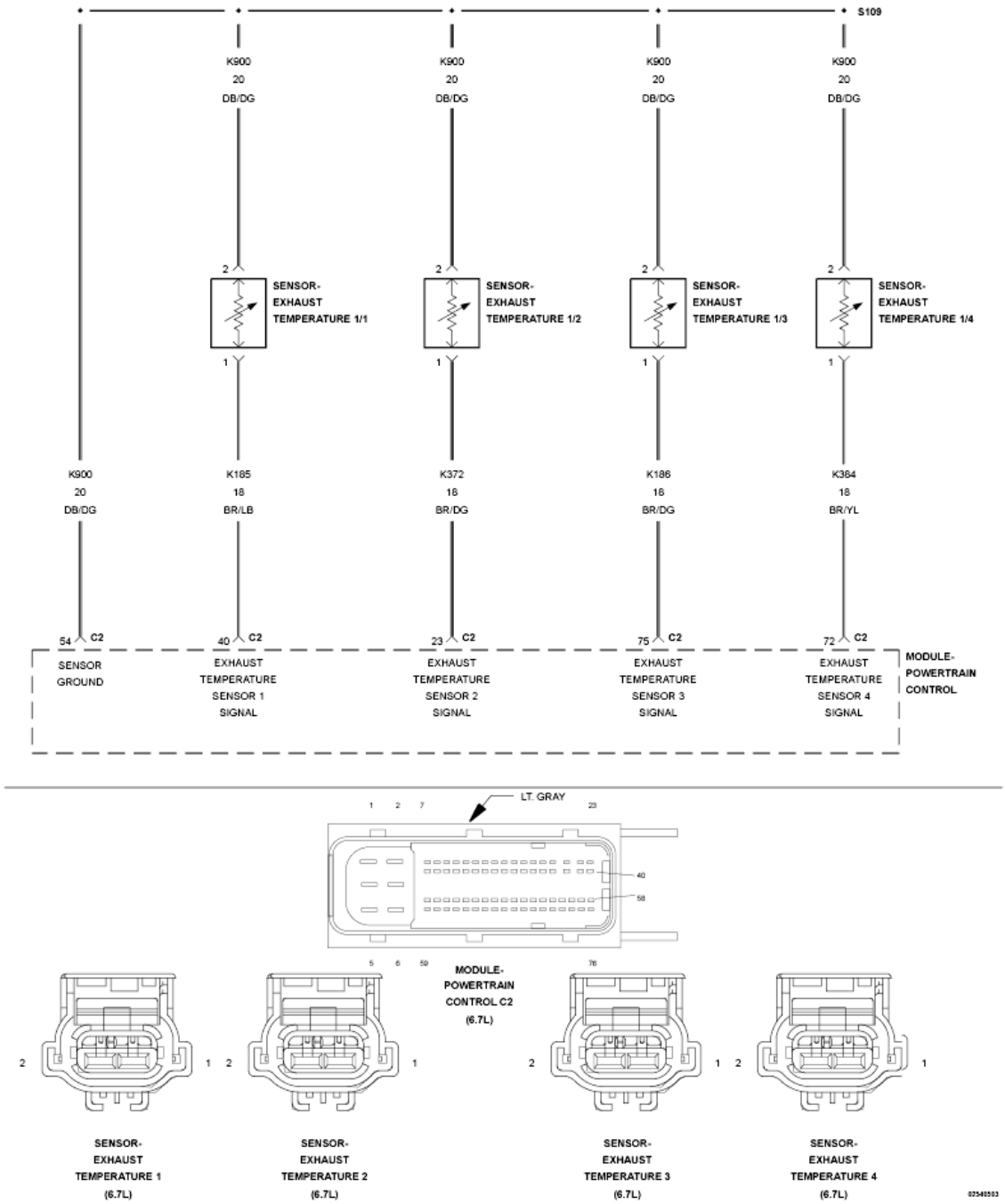

Fig. 43: Exhaust Gas Temperature Sensor Circuit Schematic
Courtesy of CHRYSLER GROUP, LLC

For a complete wiring diagram, **refer to appropriate SYSTEM WIRING DIAGRAMS article** .

THEORY OF OPERATION

The Exhaust Temperature Sensors are used by the Powertrain Control Module (PCM) to monitor the engine exhaust temperatures in the aftertreatment system. The Exhaust Temperature Sensors are thermistors and change resistance based on the temperature being measured. The Exhaust Temperature Sensors receive a 5-Volt

signal from the PCM and share a sensor ground. The PCM monitors the change in signal voltage and converts this to a temperature value. The PCM illuminates the MIL lamp immediately when the diagnostic runs and fails. A default value will be used for the Exhaust Temperature Sensor 1/4 and active regeneration of the Diesel Particulate Filter will be disabled. The PCM will turn off the MIL lamp immediately after the diagnostic runs and passes.

WHEN MONITORED:

With the ignition on.

SET CONDITION:

The Powertrain Control Module (PCM) will set the fault if it detects that the Exhaust Temperature Sensor 1/4 Signal voltage is greater than a calibrated voltage for more than a calibrated time.

POSSIBLE CAUSES

Possible Causes
(K384) EXHAUST GAS TEMPERATURE SENSOR 1/4 SIGNAL CIRCUIT SHORTED TO VOLTAGE
(K384) EXHAUST GAS TEMPERATURE SENSOR 1/4 SIGNAL CIRCUIT OPEN/HIGH RESISTANCE
(K900) SENSOR GROUND CIRCUIT OPEN/HIGH RESISTANCE
EXHAUST GAS TEMPERATURE SENSOR
POWERTRAIN CONTROL MODULE (PCM)

Always perform the Pre-Diagnostic Troubleshooting procedure before proceeding. Refer to PRE-DIAGNOSTIC TROUBLESHOOTING PROCEDURE - 6.7L .

DIAGNOSTIC TEST

1. **ACTIVE DTC**
    1. Turn the ignition on.
    2. With the scan tool, record all Freeze frame data.
    3. With the scan tool, erase DTCs.
    4. Turn the ignition off for 30 seconds.
    5. Turn the ignition on.
    6. With the scan tool, read DTCs.

    Did the DTC return?

    Yes

    - Go To 2.

No

- Perform the INTERMITTENT CONDITION diagnostic procedure. Refer to **INTERMITTENT CONDITION - 6.7L** .

2. **CHECK THE (K384) EXHAUST GAS TEMPERATURE 1/4 SIGNAL CIRCUIT FOR A SHORT TO VOLTAGE**
   1. Ignition on.
   2. Disconnect the Exhaust Temperature Sensor 1/4 harness connector.

      NOTE: Check connectors - Clean/repair as necessary.

   3. Measure the voltage on the (K384) Exhaust Gas Temperature Sensor 1/4 Signal circuit at the Exhaust Temperature Sensor 1/4 harness connector.

      Is the voltage reading above 5.2 Volts?

      Yes

      - Repair the short to voltage in the (K384) Exhaust Gas Temperature Sensor 1/4 Signal circuit.
      - Perform the POWERTRAIN VERIFICATION TEST. Refer to **POWERTRAIN VERIFICATION TEST - 6.7L** .

      No

      - Go To 3.

3. **CHECK THE (K384) EXHAUST GAS TEMPERATURE 1/4 SIGNAL CIRCUIT FOR AN OPEN/HIGH RESISTANCE**

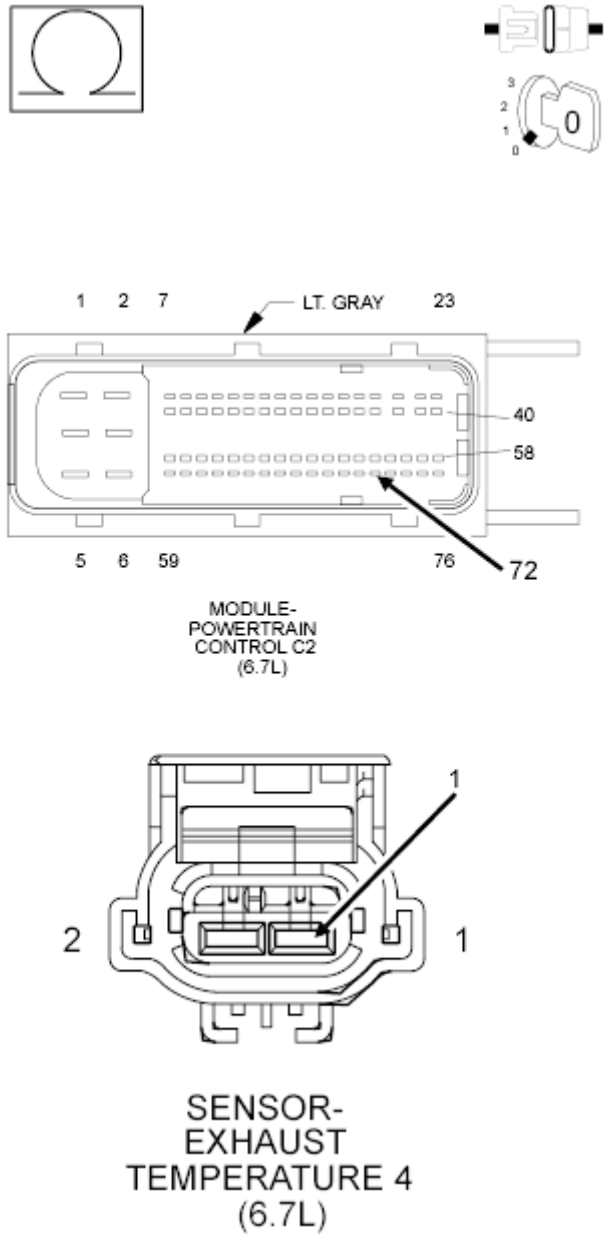

Fig. 44: Checking Exhaust Gas Temperature 1/4 Signal Circuit For Open Or High Resistance
Courtesy of CHRYSLER GROUP, LLC

1. Turn the ignition off.
2. Measure the resistance of the (K384) Exhaust Gas Temperature Sensor 1/4 Signal circuit between the Exhaust Gas Temperature Sensor 1/4 harness connector and the PCM C2 harness connector.

   Is the resistance below 5.0 Ohms?

   Yes

   - Go To 4.

No

- Repair the (K384) Exhaust Temperature 1/4 Signal circuit for an open or high resistance.
- Perform the POWERTRAIN VERIFICATION TEST. Refer to **POWERTRAIN VERIFICATION TEST - 6.7L** .

4. **CHECK THE (K900) SENSOR GROUND CIRCUIT FOR AN OPEN/HIGH RESISTANCE**

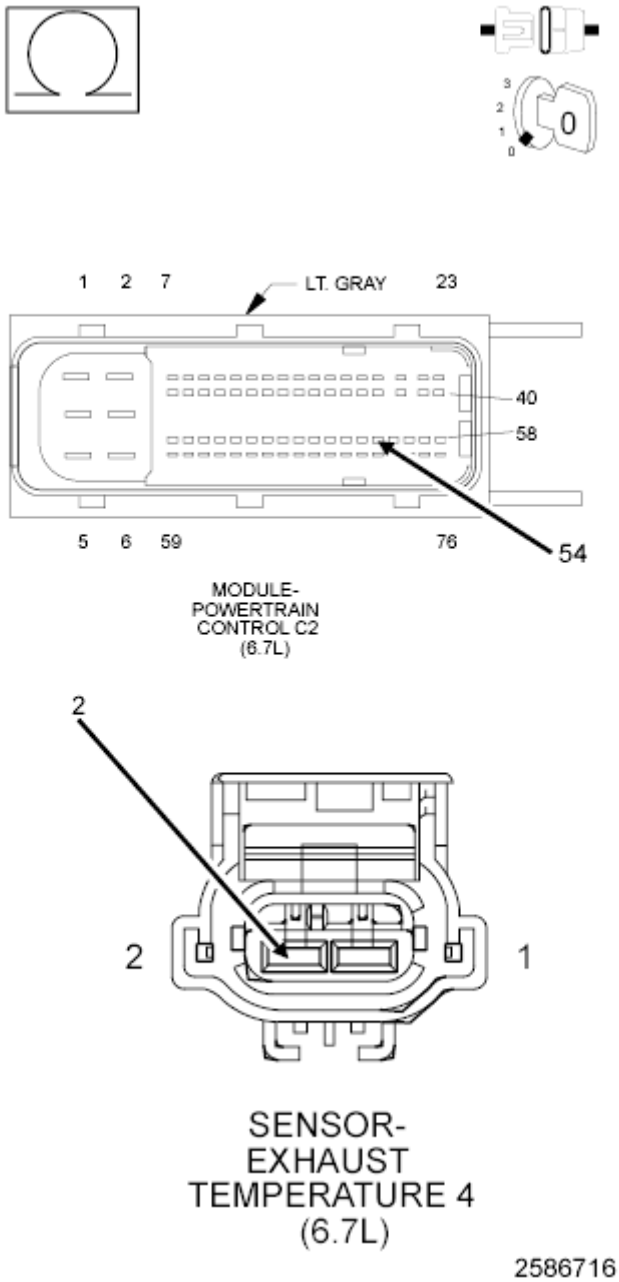

Fig. 45: Checking Exhaust Gas Temperature Sensor Ground Circuit For Open/High Resistance
Courtesy of CHRYSLER GROUP, LLC

1. Measure the resistance of the (K900) Sensor ground circuit between the Exhaust Gas Temperature

Sensor 1/4 harness connector and the PCM C2 harness connector.

Is the resistance below 5.0 Ohms?

Yes

- Go To 5.

No

- Repair the (K900) Sensor ground circuit for an open or high resistance.
- Perform the POWERTRAIN VERIFICATION TEST. Refer to **POWERTRAIN VERIFICATION TEST - 6.7L** .

5. **CHECK THE EXHAUST GAS TEMPERATURE SENSOR**
   1. Turn the ignition on.
   2. While monitoring the scan tool, connect a jumper across the Exhaust Gas Temperature Sensor 1/4 connector for at least five seconds.

      Does the DTC P2470 become active?

      Yes

      - Replace the Exhaust Gas Temperature Sensor 1/4 in accordance with the service information.
      - Perform the POWERTRAIN VERIFICATION TEST. Refer to **POWERTRAIN VERIFICATION TEST - 6.7L** .

      No

      - Replace the Powertrain Control Module in accordance with the service information.
      - Perform the POWERTRAIN VERIFICATION TEST. Refer to **POWERTRAIN VERIFICATION TEST - 6.7L** .

P249C-EXCESSIVE TIME TO ENTER CLOSED LOOP SCR REDUCTANT INJECTION CONTROL

For a complete wiring diagram, **refer to appropriate SYSTEM WIRING DIAGRAMS article** .

THEORY OF OPERATION

The engine aftertreatment system monitors the soot load in the aftertreatment DOC/DPF Catalyst. Under normal operating conditions the aftertreatment DOC/DPF Catalyst is self-cleaning, where soot is converted to ash. The soot load in the DOC/DPF Catalyst is estimated using the Exhaust Pressure Sensor and the calculated soot output of the engine. The Powertrain Control Module (PCM) will set this fault if it detects that the aftertreatment DOC/DPF Catalyst is plugged or that the differential pressure across the DOC/DPF Catalyst is above the calibrated moderately severe threshold limit. The PCM will illuminate the MIL lamp immediately when the diagnostic runs and fails. The driver will be notified via the vehicle's EVIC Message Center. The PCM will turn off the MIL lamp immediately after the soot load has dropped below the Moderately Severe Level

Threshold.

WHEN MONITORED:

The diagnostic runs when an active soot regeneration is requested, ambient air temperature is above a calibrated threshold, and engine speed and fueling are in the operating window where soot regeneration is allowed.

SET CONDITION:

If the time duration after an active soot regeneration is requested exceeds a calibrated threshold and the DOC/DPF Catalyst inlet temperature has not reached the lightoff temperature threshold to begin closed loop control.

POSSIBLE CAUSES

Possible Causes
EXHAUST TEMPERATURES NOT HIGH ENOUGH TO ACTIVELY REGENERATE THE AFTERTREATMENT DIESEL PARTICULATE FILTER SUE TO OPERATING IN LIGHT LOAD CONDITIONS
FUEL SYSTEM OR AIR HANDLING SYSTEM SENSOR FAILURE
EXHAUST TEMPERATURE SENSORS FAILED IN-RANGE LOW
BASE ENGINE FAILURE
FUEL SYSTEM FAILURE
AIR HANDLING SYSTEM FAILURE
DOC/DPF CATALYST PLUGGED

Always perform the Pre-Diagnostic Troubleshooting procedure before proceeding. Refer to PRE-DIAGNOSTIC TROUBLESHOOTING PROCEDURE - 6.7L .

DIAGNOSTIC TEST

1. **OTHER RELATED DTCS**
    1. Turn the ignition on.
    2. With the scan tool, read DTCs.

    Were there any fuel system or air handling sensor DTCs present?

    Yes

    - If this DTC is present along with any fuel system or air handling system sensor DTCs, repair those DTCs before proceeding.
    - Perform the POWERTRAIN VERIFICATION TEST. Refer to **POWERTRAIN VERIFICATION TEST - 6.7L** .

    No

- Go To 2.

2. **CHECK THE EXHAUST TEMPERATURE SENSORS**
    1. Turn the ignition off for 10 minutes to allow the Exhaust Temperature Sensors to stabilize.
    2. Turn the ignition on, engine not running.
    3. With the scan tool check the temperature values of the Exhaust Temperature Sensors.

    Are the Exhaust Temperature Sensors reading within 43°F of each other?

    Yes

    - Go To 3.

    No

    - Replace the Exhaust Temperature Sensor that is out of range as compared to the others.
    - Perform the POWERTRAIN VERIFICATION TEST. Refer to **POWERTRAIN VERIFICATION TEST - 6.7L** .

3. **CHECK THE ENGINE PERFORMANCE**
    1. Perform the CHECKING ENGINE MISFIRE / RUNS ROUGH / PERFORMANCE TEST diagnostic procedure. Refer to **DIAGNOSIS AND TESTING, 6.7L** .

    Were any problems found?

    Yes

    - Perform the appropriate repair.
    - Perform the POWERTRAIN VERIFICATION TEST. Refer to **POWERTRAIN VERIFICATION TEST - 6.7L** .

    No

    - If DTC P1451 is present, perform a scan tool initiated regeneration of the aftertreatment system. If DTC P1451 is not present, replace the DOC/DPF assembly in accordance with the service information.
    - Perform the POWERTRAIN VERIFICATION TEST. Refer to **POWERTRAIN VERIFICATION TEST - 6.7L** .

P249E-CLOSED LOOP SCR REDUCTANT INJECTION CONTROL AT LIMIT - FLOW TOO HIGH

For a complete wiring diagram, **refer to appropriate SYSTEM WIRING DIAGRAMS article** .

THEORY OF OPERATION

The Powertrain Control Module (PCM) uses the NOx Sensor 1/1 feedback along with engine operating and environmental conditions to calculate the diesel exhaust fluid dosing rate. The DEF Dosing Control Unit will

turn on the MIL Lamp via the PCM immediately after the monitor runs and fails. The DEF Dosing Control Unit will turn off the MIL Lamp via the PCM immediately after the monitor runs and passes.

WHEN MONITORED:

This monitor runs when the engine is running and diesel exhaust fluid dosing is being commanded.

SET CONDITION:

The DEF Dosing Control Unit detects that the NOx Sensor levels are higher than expected.

POSSIBLE CAUSES

Possible Causes
EGR SYSTEM LEAKS
ENGINE MISFIRE
AIR HANDLING SYSTEM FAILURE
FUEL SYSTEM FAILURE
DEF INJECTOR

Always perform the Pre-Diagnostic Troubleshooting procedure before proceeding. Refer to PRE-DIAGNOSTIC TROUBLESHOOTING PROCEDURE - 6.7L .

DIAGNOSTIC TEST

1. **OTHER RELATED DTCS**
    1. Turn the ignition on.
    2. With the scan tool, read DTCs.

       Were there any DTCs present for the EGR System, DEF Injector, NOx Sensors, DEF Pump Assembly or DEF Dosing Control Unit?

       Yes

       - If this DTC is present along with any DEF Injector, NOx Sensors, DEF Pump Assembly or DEF Dosing Control Unit, repair those DTCs before proceeding.
       - Perform the POWERTRAIN VERIFICATION TEST. Refer to **POWERTRAIN VERIFICATION TEST - 6.7L** .

       No

       - Go To 2.
2. **CHECK THE EGR SYSTEM FOR LEAKS**
    1. Turn the ignition off.
    2. Visually inspect the entire EGR system for soot streaking indicating a leak.

Were there any leaks found in the EGR system?

Yes

- Repair the EGR system in accordance with the service information.
- Perform the POWERTRAIN VERIFICATION TEST. Refer to **POWERTRAIN VERIFICATION TEST - 6.7L** .

No

- Go To 3.

3. **CHECK FOR CYLINDER MISFIRE**
   1. Start the engine.
   2. With the scan tool, navigate to Systems Tests, and perform the Injector Kill system test.

   Were any cylinders found to be faulty or low?

   Yes

   - Perform the CHECKING ENGINE MISFIRE / RUNS ROUGH / PERFORMANCE TEST diagnostic procedure. Refer to **DIAGNOSIS AND TESTING, 6.7L** .
   - Perform the POWERTRAIN VERIFICATION TEST. Refer to **POWERTRAIN VERIFICATION TEST - 6.7L** .

   No

   - Go To 4.

4. **CHECK THE ENGINE PERFORMANCE**
   1. Perform the CHECKING ENGINE MISFIRE / RUNS ROUGH / PERFORMANCE TEST diagnostic procedure. Refer to **DIAGNOSIS AND TESTING, 6.7L** .

   Were any problems found?

   Yes

   - Perform the appropriate repair.
   - Perform the POWERTRAIN VERIFICATION TEST. Refer to **POWERTRAIN VERIFICATION TEST - 6.7L** .

   No

   - Replace the DEF Injector in accordance with the service information. Refer to **INJECTOR, DIESEL EXHAUST FLUID, REMOVAL** .
   - Perform the POWERTRAIN VERIFICATION TEST. Refer to **POWERTRAIN VERIFICATION TEST - 6.7L** .

P249F-EXCESSIVE TIME TO ENTER CLOSED LOOP DPF REGENERATION CONTROL

For a complete wiring diagram, **refer to appropriate SYSTEM WIRING DIAGRAMS article** .

THEORY OF OPERATION

The engine aftertreatment system monitors the soot load in the DOC/DPF Catalyst. Under normal operating conditions the aftertreatment Diesel Particulate Filter is self-cleaning, where soot is converted to ash. The soot load in the aftertreatment DOC/DPF Catalyst is estimated using the Exhaust Pressure Sensor and the calculated soot output of the engine. The Powertrain Control Module (PCM) will set this fault if it detects that the aftertreatment DOC/DPF Catalyst is plugged or that the differential pressure across the DOC/DPF Catalyst is above the calibrated moderately severe threshold limit. The PCM will illuminate the MIL lamp immediately when the diagnostic runs and fails. The driver will be notified via the vehicle's EVIC Message Center. The PCM will turn off the MIL lamp immediately after the soot load has dropped below the Moderately Severe Level Threshold.

WHEN MONITORED:

This monitor runs when an active soot regeneration is requested, ambient air temperature is above a calibrated threshold, and engine speed and fueling are in the operating window where soot regeneration is allowed.

SET CONDITION:

If the time duration after an active soot regeneration is requested exceeds a calibrated threshold and the Diesel Oxidation Catalyst inlet temperature has not reached the lightoff temperature threshold to begin closed loop control.

POSSIBLE CAUSES

Possible Causes
EXHAUST TEMPERATURES NOT HIGH ENOUGH TO ACTIVELY REGENERATE THE AFTERTREATMENT DIESEL PARTICULATE FILTER DUE TO OPERATING IN LIGHT LOAD CONDITIONS
FUEL SYSTEM OR AIR HANDLING SYSTEM SENSOR FAILURE
EXHAUST TEMPERATURE SENSORS FAILED IN-RANGE LOW
ENGINE MISFIRES
FUEL SYSTEM FAILURE
AIR HANDLING SYSTEM FAILURE
DOC/DPF CATALYST PLUGGED

Always perform the Pre-Diagnostic Troubleshooting procedure before proceeding. Refer to PRE-DIAGNOSTIC TROUBLESHOOTING PROCEDURE - 6.7L .

DIAGNOSTIC TEST

1. **OTHER RELATED DTCS**

1. Turn the ignition on.
2. With the scan tool, read DTCs.

   Were there any fuel system or air handling sensor DTCs present?

   Yes

   - If this DTC is present along with any fuel system or air handling system sensor DTCs, repair those DTCs before proceeding.
   - Perform the POWERTRAIN VERIFICATION TEST. Refer to **POWERTRAIN VERIFICATION TEST - 6.7L** .

   No

   - Go To 2.

2. **CHECK THE EXHAUST TEMPERATURE SENSORS**
   1. Turn the ignition off for 10 minutes to allow the Exhaust Temperature Sensors to stabilize.
   2. Turn the ignition on, engine not running.
   3. With the scan tool check the temperature values of the Exhaust Temperature Sensors.

      Are the Exhaust Temperature Sensors reading within 43°F of each other?

      Yes

      - Go To 3.

      No

      - Replace the Exhaust Temperature Sensor that is out of range as compared to the others. Refer to **SENSOR, EXHAUST TEMPERATURE, REMOVAL** .
      - Perform the POWERTRAIN VERIFICATION TEST. Refer to **POWERTRAIN VERIFICATION TEST - 6.7L** .

3. **CHECK THE ENGINE PERFORMANCE**
   1. Perform the CHECKING ENGINE MISFIRE / RUNS ROUGH / PERFORMANCE TEST diagnostic procedure. Refer to **DIAGNOSIS AND TESTING, 6.7L** .

      Were any problems found?

      Yes

      - Perform the appropriate repair.
      - Perform the POWERTRAIN VERIFICATION TEST. Refer to **POWERTRAIN VERIFICATION TEST - 6.7L** .

No

- Go To 4.

4. **CHECK FOR THE DOC/DPF CATALYST DAMAGED**
   1. Separate the exhaust and inspect the DOC/DPF Catalyst for internal damage or signs of face plugging.

      Was any internal damage found in the DOC/DPF Catalyst?

      Yes

      - Replace the DOC/DPF Catalyst in accordance with the service information. Refer to **CATALYST, SELECTIVE CATALYTIC REDUCTION (SCR), REMOVAL** .
      - Perform the POWERTRAIN VERIFICATION TEST. Refer to **POWERTRAIN VERIFICATION TEST - 6.7L** .

      No

      - Replace the DOC/DPF Catalyst inlet temperature sensor.
      - Perform the POWERTRAIN VERIFICATION TEST. Refer to **POWERTRAIN VERIFICATION TEST - 6.7L** .

P24A0-CLOSED LOOP DPF REGENERATION CONTROL AT LIMIT - TEMPERATURE TOO LOW

For a complete wiring diagram, **refer to appropriate SYSTEM WIRING DIAGRAMS article** .

WHEN MONITORED:

The monitor runs when the DOC/DPF Catalyst temperature closed loop control is active and ambient air temperature is above a calibrated threshold.

SET CONDITION:

The Powertrain Control Module (PCM) will set this fault if it detects that the DOC/DPF Catalyst closed loop control fueling adjustment has reached it's maximum allowable fueling but is unable to reach the target regeneration temperature.

POSSIBLE CAUSES

Possible Causes
EXHAUST TEMPERATURES NOT HIGH ENOUGH TO ACTIVELY REGENERATE THE AFTERTREATMENT DIESEL PARTICULATE FILTER SUE TO OPERATING IN LIGHT LOAD CONDITIONS
FUEL OR EMISSION RELATED FAULTS
EXHAUST TEMPERATURE SENSORS FAILED IN-RANGE LOW

DOC/DPF CATALYST MISSING
DOC/DPF CATALYST DAMAGED

Always perform the Pre-Diagnostic Troubleshooting procedure before proceeding. Refer to PRE-DIAGNOSTIC TROUBLESHOOTING PROCEDURE - 6.7L .

DIAGNOSTIC TEST

1. **OTHER DTCS**
   1. Ignition on, engine not running.
   2. With the scan tool, read DTCs.

      Were there any fuel system or air handling sensor DTCs present?

      Yes

      - Repair other DTCs before proceeding.

      No

      - Go To 2.
2. **CHECK THE EXHAUST TEMPERATURE SENSORS**
   1. Turn the ignition off for 10 minutes to allow the Exhaust Temperature Sensors to stabilize.
   2. Turn the ignition on.
   3. With the scan tool check the temperature values of the Exhaust Temperature Sensors.

      Are the Exhaust Temperature Sensors reading within 43°F of each other?

      Yes

      - Go To 3.

      No

      - Replace the Exhaust Temperature Sensor that is out of range as compared to the others.
      - Perform the POWERTRAIN VERIFICATION TEST. Refer to **POWERTRAIN VERIFICATION TEST - 6.7L** .
3. **CHECK FOR THE DOC/DPF CATALYST MISSING**
   1. Visually inspect the aftertreatment exhaust system.

      Is the DOC/DPF Catalyst installed on the vehicle?

      Yes

- Go To 4.

No

- Replace the DOC/DPF Catalyst in accordance with the service information.
- Perform the POWERTRAIN VERIFICATION TEST. Refer to **POWERTRAIN VERIFICATION TEST - 6.7L** .

4. **CHECK FOR THE DOC/DPF CATALYST DAMAGED**
   1. Separate the exhaust and inspect the DOC/DPF Catalyst for internal damage or signs of face plugging.

      Was any internal damage found in the DOC/DPF Catalyst?

      Yes

      - Replace the aftertreatment DOC/DPF Catalyst in accordance with the service information. Refer to **CATALYST, SELECTIVE CATALYTIC REDUCTION (SCR), REMOVAL** .
      - Perform the POWERTRAIN VERIFICATION TEST. Refer to **POWERTRAIN VERIFICATION TEST - 6.7L** .

      No

      - Replace the DOC/DPF Catalyst outlet temperature sensor. Refer to **SENSOR, EXHAUST TEMPERATURE, REMOVAL** .
      - Perform the POWERTRAIN VERIFICATION TEST. Refer to **POWERTRAIN VERIFICATION TEST - 6.7L** .

P2503-CHARGING SYSTEM OUTPUT LOW

For a complete wiring diagram, **refer to appropriate SYSTEM WIRING DIAGRAMS article** .

THEORY OF OPERATION

There are two communication lines between the Powertrain Control Module (PCM) and Generator. Based on sensed battery voltage, the PCM commands the alternator to charge the batteries to a desired voltage. The max voltage the PCM will command the Generator to charge is 14.75 Volts. The PCM then receives feedback from the Generator on the voltage level it is charging the batteries. The PCM will not light a MIL lamp for this fault.

WHEN MONITORED:

While the engine is running.

SET CONDITION:

Battery voltage is less than 11.5 Volts for more than eight seconds. Battery voltage must exceed 12.0 Volts for more than five seconds for fault to become inactive.

POSSIBLE CAUSES

Possible Causes
GENERATOR (K20) GENERATOR FIELD CONTROL CIRCUIT SHORTED TO GROUND (K20) GENERATOR FIELD CONTROL CIRCUIT OPEN
POWERTRAIN CONTROL MODULE (PCM)

Always perform the Pre-Diagnostic Troubleshooting procedure before proceeding. Refer to PRE-DIAGNOSTIC TROUBLESHOOTING PROCEDURE - 6.7L .

DIAGNOSTIC TEST

1. **ACTIVE DTC**
   1. With the scan tool, read DTCs.

      Is DTC P065A active?

      Yes

      - Go To 2.

      No

      - Perform the INTERMITTENT CONDITION diagnostic procedure. Refer to **INTERMITTENT CONDITION - 6.7L** .
2. **CHECK THE GENERATOR**
   1. Turn the ignition off.
   2. Disconnect the Generator field harness connector.

      NOTE: Check connectors - Clean/repair as necessary.

   3. Measure the resistance between the Generator field terminals at the Generator.

      Is the resistance between 0.5 and 15.0 Ohms?

      Yes

      - Go To 3.

      No

      - Replace the Generator in accordance with the service information.
      - Perform the POWERTRAIN VERIFICATION TEST. Refer to **POWERTRAIN VERIFICATION TEST - 6.7L** .

3. **CHECK THE (K20) GENERATOR FIELD CONTROL CIRCUIT FOR A SHORT TO GROUND**
   1. Disconnect the PCM C1 harness connector.

      NOTE: Check connectors - Clean/repair as necessary.

   2. Measure the resistance between ground and the (K20) Generator Field Control circuit at the Generator field harness connector.

      Is the resistance below 10k Ohms?

      Yes

      - Repair the (K20) Generator Field Control circuit for a short to ground.
      - Perform the POWERTRAIN VERIFICATION TEST. Refer to **POWERTRAIN VERIFICATION TEST - 6.7L** .

      No

      - Go To 4.
4. **CHECK THE (K20) GENERATOR FIELD CONTROL CIRCUIT FOR AN OPEN/HIGH RESISTANCE**
   1. Measure the resistance between of the (K20) Generator Field Control circuit between the Generator field harness connector and the PCM C1 harness connector.

      Is the resistance below 5.0 Ohms?

      Yes

      - Go To 5.

      No

      - Repair the (K20) Generator Field Control circuit for an open or high resistance.
      - Perform the POWERTRAIN VERIFICATION TEST. Refer to **POWERTRAIN VERIFICATION TEST - 6.7L** .
5. **POWERTRAIN CONTROL MODULE**
   1. Measure and record the voltage between battery positive circuit of the PCM harness connector and the battery negative circuits of the PCM harness connector.
   2. Reconnect the PCM connectors.
   3. Using the scan tool, read battery voltage.
   4. Compare the voltage reading from the voltmeter with that of the scan tool.

      Are the readings within 3.0 Volts of each other?

Yes

- Perform the INTERMITTENT CONDITION diagnostic procedure. Refer to **INTERMITTENT CONDITION - 6.7L** .

No

- Replace and program the Powertrain Control Module in accordance with the service information. Refer to **PCM - REMOVAL** , also see **PCM/ECM / TCM PROGRAMMING** .
- Perform the POWERTRAIN VERIFICATION TEST. Refer to **POWERTRAIN VERIFICATION TEST - 6.7L** .

P2504-CHARGING SYSTEM OUTPUT HIGH

For a complete wiring diagram, **refer to appropriate SYSTEM WIRING DIAGRAMS article** .

THEORY OF OPERATION

There are two communication lines between the Powertrain Control Module (PCM) and Generator. Based on sensed battery voltage, the PCM commands the alternator to charge the batteries to a desired voltage. The max voltage the PCM will command the Generator to charge is 14.75 Volts. The PCM then receives feedback from the alternator on the voltage level it is charging the batteries. The PCM will not light a MIL lamp for this fault.

WHEN MONITORED:

While the engine is running.

SET CONDITION:

Battery voltage is less than 11.5 Volts for more than eight seconds. Battery voltage must exceed 12 Volts for more than five seconds for fault to become inactive.

POSSIBLE CAUSES

Possible Causes
DIRTY OR LOOSE CONNECTIONS
ADD-ON OR ACCESSORY WIRES AT BATTERY TERMINAL
HIGH RESISTANCE IN THE B+ CIRCUIT
HIGH RESISTANCE IN THE B+ CROSS OVER CABLE
HIGH RESISTANCE IN THE GROUND CIRCUIT
GENERATOR
POWERTRAIN CONTROL MODULE (PCM)

Always perform the Pre-Diagnostic Troubleshooting procedure before proceeding. Refer to PRE-DIAGNOSTIC TROUBLESHOOTING PROCEDURE - 6.7L .

DIAGNOSTIC TEST

1. **ACTIVE DTC**
    1. With the scan tool, read DTCs.

       Is DTC P065A active

       Yes

       - Go To 2.

       No

       - Perform the INTERMITTENT CONDITION diagnostic procedure. Refer to **INTERMITTENT CONDITION - 6.7L** .
2. **CHECK FOR DIRTY OR LOOSE CONNECTIONS**
    1. Visually inspect the positive and negative connections at the battery.
    2. Visually inspect the battery negative connections at the engine block.

       Are the connections tight and free of corrosion?

       Yes

       - Go To 3.

       No

       - Clean and/or tighten the connections.
       - Perform the POWERTRAIN VERIFICATION TEST. Refer to **POWERTRAIN VERIFICATION TEST - 6.7L** .
3. **CHECK FOR ADD-ON OR ACCESSORY WIRES AT BATTERY TERMINAL**
    1. Check for add-on or accessory wiring at positive (+) terminal of the battery.

       Are there any damaged wires at the battery?

       Yes

       - Remove defective or miss wired add-on or accessory wiring from battery.
       - Perform the POWERTRAIN VERIFICATION TEST. Refer to **POWERTRAIN VERIFICATION TEST - 6.7L** .

       No

       - Go To 4.
4. **CHECK FOR HIGH RESISTANCE IN THE B+ CIRCUIT**

1. Measure the voltage between the B+ post of the generator and the B+ post of the battery while the engine is running.

   Is the voltage above 0.4 Volts?

   Yes

   - Repair the high resistance in the B+ circuit from battery to the generator.
   - Perform the POWERTRAIN VERIFICATION TEST. Refer to **POWERTRAIN VERIFICATION TEST - 6.7L** .

   No

   - Go To 5.

5. **CHECK FOR HIGH RESISTANCE IN THE B+ CROSS OVER CABLE**
   1. Measure the voltage between the B+ post of the generator and the B+ post of the right side battery to the left side battery while the engine is running.

      Is the voltage above 0.4 Volts?

      Yes

      - Repair the high resistance in the B+ cross over cable from right side battery to left side battery.
      - Perform the POWERTRAIN VERIFICATION TEST. Refer to **POWERTRAIN VERIFICATION TEST - 6.7L** .

      No

      - Go To 6.

6. **CHECK FOR HIGH RESISTANCE IN THE GROUND CIRCUIT**
   1. Measure the voltage between the generator case and the B- post of the battery.

      Is the voltage above 0.1 Volts?

      Yes

      - Repair the high resistance in the ground circuit.
      - Perform the POWERTRAIN VERIFICATION TEST. Refer to **POWERTRAIN VERIFICATION TEST - 6.7L** .

      No

      - Go To 7.

7. **GENERATOR**

1. Turn the ignition off.
2. Disconnect the Generator field harness connector.

   NOTE: Check connectors - Clean/repair as necessary.

3. Measure the resistance between the generator field terminals at the generator.

   Is the resistance between 0.5 and 15.0 Ohms?

   Yes

   - Go To 8.

   No

   - Replace the Generator in accordance with the service information.
   - Perform the POWERTRAIN VERIFICATION TEST. Refer to **POWERTRAIN VERIFICATION TEST - 6.7L** .

8. **POWERTRAIN CONTROL MODULE (PCM)**
   1. Disconnect the PCM connectors.
   2. Measure and record the voltage between battery positive circuit of the PCM harness connector and the battery negative circuits of the PCM harness connector.
   3. Reconnect the PCM connectors.
   4. Use the scan tool to measure and record battery voltage.
   5. Compare the voltage reading from the voltmeter with that of the scan tool.

      Are the readings within 3.0 Volts of each other?

      Yes

      - Perform the INTERMITTENT CONDITION diagnostic procedure. Refer to **INTERMITTENT CONDITION - 6.7L** .

      No

      - Replace and program the Powertrain Control Module in accordance with the service information. Refer to **PCM - REMOVAL** , also see **PCM/ECM / TCM PROGRAMMING** .
      - Perform the POWERTRAIN VERIFICATION TEST. Refer to **POWERTRAIN VERIFICATION TEST - 6.7L** .

P2509-PCM/PCM POWER INPUT SIGNAL INTERMITTENT

For a complete wiring diagram, **refer to appropriate SYSTEM WIRING DIAGRAMS article** .

THEORY OF OPERATION

The Powertrain Control Module (PCM) receives a constant voltage from the batteries through the battery wires that are connected directly to the positive (+) battery post. The PCM receives switched battery input through the vehicle Ignition Switch wire when the vehicle is turned on. The PCM will illuminate the ETC lamp immediately after the diagnostic runs and fails. During the time the customer may experience some performance effects such as engine dying or hard starting. Fault information, trip information could be inaccurate.

WHEN MONITORED:

Continuous - key on or key off.

SET CONDITION:

Battery voltage was removed from the Powertrain Control Module (PCM) while it was powered on. This could be during engine operation, or after key off while the PCM was powering down. This powering down condition can last up to 10 minutes.

POSSIBLE CAUSES

Possible Causes
POOR CONNECTIONS AT THE BATTERIES BATTERIES DISCONNECTED WITHIN TEN MINUTES AFTER KEY OFF
LOW BATTERY VOLTAGE OPEN FUSED B+ TO PCM OPEN GROUND CIRCUIT BATTERY POSITIVE SHORTED TO OTHER CIRCUITS RETURN CIRCUIT SHORTED BATTERY POSITIVE SHORTED TO GROUND DEFECTIVE BATTERY

Always perform the Pre-Diagnostic Troubleshooting procedure before proceeding. Refer to PRE-DIAGNOSTIC TROUBLESHOOTING PROCEDURE - 6.7L .

DIAGNOSTIC TEST

NOTE: **It can take up to 10 minutes for the PCM to power down after the ignition is turned off. Disconnecting the batteries during this time will cause this DTC to set.**

1. **CHECK FOR POOR CONNECTIONS AT THE BATTERIES**
    1. Visually inspect the wiring at the battery for damaged wires, or corrosion.

       Are the connections tight and free of corrosion?

       Yes

- Go To 2.

No

- Repair the poor connections at the batteries.
- Perform the POWERTRAIN VERIFICATION TEST. Refer to **POWERTRAIN VERIFICATION TEST - 6.7L** .

2. **CHECK FOR LOW BATTERY VOLTAGE / DEFECTIVE BATTERY**
   1. Disconnect both batteries.

      NOTE: Keep the batteries disconnected through the entire test procedure.

   2. Perform a battery test using the midtronics battery tester.

      Do both batteries pass the midtronics battery test?

      Yes

      - Go To 3.

      No

      - Recharge or replace the battery(s).
      - Perform the POWERTRAIN VERIFICATION TEST. Refer to **POWERTRAIN VERIFICATION TEST - 6.7L** .

3. **CHECK THE PCM FUSED B+ CIRCUITS**
   1. Turn the ignition off.
   2. Disconnect the PCM harness connectors.
   3. Measure the resistance between the positive battery post and the three PCM supply circuits.

      Is the resistance below 5.0 Ohms?

      Yes

      - Go To 4.

      No

      - Repair the open fused B+ circuit to PCM.
      - Perform the POWERTRAIN VERIFICATION TEST. Refer to **POWERTRAIN VERIFICATION TEST - 6.7L** .

4. **CHECK THE PCM GROUND CIRCUITS**
   1. Measure the resistance between the negative battery post and the three PCM ground circuits.

Is the resistance less than 5.0 Ohms?

Yes

- Go To 5.

No

- Repair the open ground circuit.
- Perform the POWERTRAIN VERIFICATION TEST. Refer to **POWERTRAIN VERIFICATION TEST - 6.7L** .

5. **BATTERY POSITIVE SHORTED TO OTHER CIRCUITS**
    1. Measure the resistance between the three PCM supply circuits and all other circuits in the PCM harness connector, except other supply circuits.

       Is the resistance greater than 10k Ohms?

       Yes

       - Go To 6.

       No

       - Repair the battery circuit short to other circuits in engine harness.
       - Perform the POWERTRAIN VERIFICATION TEST. Refer to **POWERTRAIN VERIFICATION TEST - 6.7L** .
6. **RETURN CIRCUIT SHORTED**
    1. Measure the resistance between the three PCM return circuits and all other circuits in the PCM harness connector, except other return circuits.

       Is the resistance greater than 10k Ohms?

       Yes

       - Go To 7.

       No

       - Repair or replace the engine harness.
       - Perform the POWERTRAIN VERIFICATION TEST. Refer to **POWERTRAIN VERIFICATION TEST - 6.7L** .
7. **BATTERY POSITIVE SHORTED TO GROUND**
    1. Measure the resistance between the PCM B+ supply circuits and ground.

       Is the resistance greater than 10k Ohms?

Yes

- Perform the INTERMITTENT CONDITION diagnostic procedure. Refer to **INTERMITTENT CONDITION - 6.7L** .

No

- Repair Battery Positive circuit that is shorted to ground.
- Perform the POWERTRAIN VERIFICATION TEST. Refer to **POWERTRAIN VERIFICATION TEST - 6.7L** .

P2563-TURBOCHARGER BOOST CONTROL POSITION SENSOR PERFORMANCE

For a complete wiring diagram, **refer to appropriate SYSTEM WIRING DIAGRAMS article** .

THEORY OF OPERATION

The Variable Geometry Turbocharger (VGT) is electronically activated by the Turbo Actuator. The Turbo Actuator is a smart device that receives information via the CAN BUS from the Powertrain Control Module (PCM). The Turbo Actuator performs it's own diagnostics and reports failures back to the PCM using the CAN BUS. The PCM then decodes the error message and converts it to a fault code. This monitor is a two trip fault. The MIL lamp will turn off once the diagnostic runs and passes in four consecutive drive cycles.

WHEN MONITORED:

Key on, at initial start up. If the monitor fails at start up, it will run again after five minutes. One time per key cycle.

SET CONDITION:

Actual position not found.

POSSIBLE CAUSES

Possible Causes
SOOT BUILD UP ON THE TURBOCHARGER
TURBOCHARGER ASSEMBLY

Always perform the Pre-Diagnostic Troubleshooting procedure before proceeding. Refer to PRE-DIAGNOSTIC TROUBLESHOOTING PROCEDURE - 6.7L .

NOTE: **If there are DTCs present with P2262, P226B, P226C, or P2563, address P2262, P226B, P226C, or P2563 before attempting to repair the other fault codes. If however, these DTCs are accompanied by DTC P0471, both DTCs should be addressed and repaired.**

DIAGNOSTIC TEST

1. **VEHICLE CONFIGURATION**
    1. The repair procedure is different depending on whether the vehicle is a Pick Up or Chassis Cab.

       Is the vehicle a Pick Up or Chassis Cab?

       Pick Up

       - Go To 2.

       Chassis Cab

       - Go To 4.
2. **OTHER DTCS PRESENT**
    1. Turn ignition on.
    2. With the scan tool, read DTCs.

       Are there any communication DTCs related to the J1939 Datalink present?

       Yes

       - Diagnose and repair the communication DTCs before proceeding.
       - Perform the POWERTRAIN VERIFICATION TEST. Refer to **POWERTRAIN VERIFICATION TEST - 6.7L** .

       No

       - Go To 3.
3. **TURBOCHARGER CLEANING**

   NOTE: Do not erase the DTC before attempting to run the VG Turbocharger Cleaning procedure. The procedure can only run if the P2262, P226B, P226C, or P2563 are present (active, pending or stored).

    1. Reconnect the Turbo Actuator harness connector.
    2. Turn ignition on.
    3. With the scan tool, navigate to miscellaneous functions and initialize the VG Turbocharger Cleaning Procedure. Follow the directions on the scan tool completely.

       NOTE: When the procedure is initialized you will see one of two messages on the screen.

       Which message displayed on the tool?

       Turbo does not need to be cleaned;

- The Turbocharger does not need cleaning, or cleaning of the Turbocharger will not fix the stick condition. If DTC P2262, P226B, P226C, or P2563 are **active or pending** , replace the Turbocharger assembly. If the DTC is **stored** , erase the DTC. Perform the DIESEL AFTERTREATMENT VALIDATION - 6.7L procedure. Refer to **DIESEL AFTERTREATMENT VALIDATION- 6.7L** .

The engine must idle at 1, 500 RPM for 5 minutes prior to injecting the cleaner;

- The Turbocharger cleaning has initiated. Fasten the cleaning tool to the vehicle and follow the instructions on the screen completely. After the first attempt at cleaning is completed the test will run again automatically and determine if the Turbocharger has been cleaned. The scan tool can make up to three attempts to clean the Turbocharger before failing it. After the cleaning procedure has finished, the scan tool will display the results. If the scan tool displays VG Turbocharger cleaning was successful, the repair is complete. If the scan tool displays VG Turbocharger cleaning was unsuccessful, replace the Turbocharger assembly in accordance with the service information.
- Perform the DIESEL AFTERTREATMENT VALIDATION - 6.7L procedure. Refer to **DIESEL AFTERTREATMENT VALIDATION- 6.7L** .

4. **OTHER DTCS PRESENT**
   1. Turn ignition on.
   2. With the scan tool, read DTCs.

      Are there any communication DTCs related to the J1939 Datalink present?

      Yes

      - Diagnose and repair those DTCs before replacing the Turbocharger assembly.

      No

      - Replace the Turbocharger assembly in accordance with the service information.
      - Perform the DIESEL AFTERTREATMENT VALIDATION - 6.7L procedure. Refer to **DIESEL AFTERTREATMENT VALIDATION- 6.7L** .

P2579-TURBOCHARGER SPEED SENSOR CIRCUIT PERFORMANCE

For a complete wiring diagram, **refer to appropriate SYSTEM WIRING DIAGRAMS article** .

THEORY OF OPERATION

The Turbocharger Speed Sensor is a variable reluctance speed sensor. It consists of a coil of wire and an iron core. The target on the turbocharger shaft is a ground flat surface in the center of the shaft. As the flat surface on the turbocharger shaft spins past the speed sensor, a signal is generated. The Powertrain Control Module (PCM) interprets this signal and converts it to a turbocharger speed reading. This monitor is a two trip fault. The MIL lamp will turn off once the diagnostic runs and passes in four consecutive drive cycles.

WHEN MONITORED:

Engine running, turbo speed estimate is greater than a calibrated threshold.

SET CONDITION:

The Powertrain Control Module (PCM) calculates an estimated turbo speed. The fault is activated when the difference of speed between the Turbo Speed Sensor and the turbo speed estimate is greater than a calibrated value. The fault is also activated if the Turbo Speed Sensor reading goes above a calibrated limit.

POSSIBLE CAUSES

Possible Causes
HIGH RESISTANCE IN THE (K540) TURBO SPEED SENSOR SIGNAL CIRCUIT
HIGH RESISTANCE IN THE (K540) TURBO SPEED SENSOR SIGNAL CIRCUIT
INCORRECT BOOST PRESSURE SENSOR INSTALLED
TURBOCHARGER SPEED SENSOR

Always perform the Pre-Diagnostic Troubleshooting procedure before proceeding. Refer to PRE-DIAGNOSTIC TROUBLESHOOTING PROCEDURE - 6.7L .

DIAGNOSTIC TEST

1. **DTC ACTIVE**
    1. With vehicle in park/neutral, use the accelerator pedal to accelerate the engine speed to 3100-3200 RPM and hold the engine speed for at least 60 seconds.
    2. Return to idle for 60 seconds and then repeat.

       Does P2579 become active?

       Yes

       - Go To 2.

       No

       - Perform the INTERMITTENT CONDITION diagnostic procedure. Refer to **INTERMITTENT CONDITION - 6.7L** .
2. **INCORRECT BOOST PRESSURE SENSOR INSTALLED**
    1. The CAC/Boost Pressure Sensor and Intake Air Temperature/Intake Air Pressure Sensors are similar but have different part numbers. If the Boost Pressure Sensor was replaced with the wrong part, this DTC can be set.
    2. Verify the part number of the Boost Pressure Sensor.

       Is the Boost Pressure Sensor part number correct?

Yes

- Go To 3.

No

- Replace the Boost Pressure Sensor with the correct part.
- Perform the POWERTRAIN VERIFICATION TEST. Refer to **POWERTRAIN VERIFICATION TEST - 6.7L** .

3. **TURBOCHARGER SPEED SENSOR**
   1. Turn the ignition off.
   2. Disconnect the Turbocharger Speed Sensor harness connector.

      NOTE: Check connectors - Clean/repair as necessary.

   3. Measure the resistance of the Turbo Speed Sensor by probing (K540) Turbo Speed Sensor Signal circuit and the (K541) Turbo Speed Sensor ground circuit at the Turbocharger Speed Sensor.

      Is the resistance between 600 and 1600 Ohms?

      Yes

      - Go To 4.

      No

      - Replace the Turbocharger Speed Sensor in accordance with the service information.
      - Perform the POWERTRAIN VERIFICATION TEST. Refer to **POWERTRAIN VERIFICATION TEST - 6.7L** .

4. **CHECK FOR HIGH RESISTANCE IN THE (K540) TURBO SPEED SIGNAL CIRCUIT**
   1. Disconnect the PCM C1 harness connector.
   2. Measure the resistance of the (K540) Turbo Speed Sensor Signal circuit between the PCM C1 harness connector and the Turbocharger Speed Sensor harness connector.

      Is the resistance below 5.0 Ohms?

      Yes

      - Repair the (K540) Turbo Speed Sensor Signal circuit for an open or high resistance.
      - Perform the POWERTRAIN VERIFICATION TEST. Refer to **POWERTRAIN VERIFICATION TEST - 6.7L** .

      No

      - Go To 5.

5. **CHECK FOR HIGH RESISTANCE IN THE (K541) TURBO SPEED SENSOR RETURN CIRCUIT**
    1. Measure the resistance of the (K541) Turbo Speed Sensor Return circuit between the Turbo Speed Sensor harness connector and the PCM C1 harness connector.

       Is the resistance below 5.0 Ohms?

       Yes

       - Go To 6.

       No

       - Repair the (K540) Turbo Speed Sensor Signal circuit for an open or high resistance.
       - Perform the POWERTRAIN VERIFICATION TEST. Refer to **POWERTRAIN VERIFICATION TEST - 6.7L** .
6. **POWERTRAIN CONTROL MODULE**
    1. Reconnect the PCM C1 harness connector.
    2. Start the engine.
    3. With vehicle in park/neutral, use the accelerator pedal to accelerate the engine speed to 3100-3200 RPM and hold the engine speed for at least 60 seconds.
    4. Return to idle for 60 seconds and then repeat.

       Does DTC P2579 become active during engine operation?

       Yes

       - Replace the Powertrain Control Module in accordance with the Service Information.
       - Perform the POWERTRAIN VERIFICATION TEST. Refer to **POWERTRAIN VERIFICATION TEST - 6.7L** .

       No

       - The problem may have been corrected when the harness connections were re-connected. Be certain that the PCM and chassis grounds are in good condition.
       - Perform the INTERMITTENT CONDITION diagnostic procedure. Refer to **INTERMITTENT CONDITION - 6.7L** .

P2580-TURBOCHARGER SPEED SENSOR CIRCUIT LOW

For a complete wiring diagram, **refer to appropriate SYSTEM WIRING DIAGRAMS article** .

THEORY OF OPERATION

The Turbocharger Speed Sensor is a variable reluctance speed sensor. It consists of a coil of wire and an iron

core. The target on the turbocharger shaft is a ground flat surface in the center of the shaft. As the flat surface on the turbocharger shaft spins past the speed sensor, a signal is generated. The Powertrain Control Module (PCM) interprets this signal and converts it to a turbocharger speed reading. If this fault becomes active the PCM will light the MIL light immediately. During this time the PCM uses an estimated turbocharger speed. An engine power derate may be experienced. The PCM turns off the MIL when the diagnostic runs and passes in four consecutive drive cycles.

WHEN MONITORED:

While the engine is running, at significantly elevated boost levels.

SET CONDITION:

The Powertrain Control Module (PCM) detects turbocharger speed detected is less than a calibration limit for a calibrated amount of time.

POSSIBLE CAUSES

Possible Causes
(K540) TURBO SPEED SENSOR SIGNAL CIRCUIT SHORTED TO THE (K541) TURBO SPEED SENSOR RETURN CIRCUIT
(K540) TURBO SPEED SIGNAL SENSOR CIRCUIT SHORTED TO GROUND
(K540) TURBO SPEED SENSOR SIGNAL CIRCUIT OPEN/HIGH RESISTANCE
(K541) TURBO SPEED SENSOR RETURN CIRCUIT OPEN/HIGH RESISTANCE
(A209) FUSED B+ CIRCUIT
PCM GROUNDS
INLET AIR PRESSURE SENSOR
INTAKE MANIFOLD PRESSURE SENSOR
TURBOCHARGER SPEED SENSOR

Always perform the Pre-Diagnostic Troubleshooting procedure before proceeding. Refer to PRE-DIAGNOSTIC TROUBLESHOOTING PROCEDURE - 6.7L .

DIAGNOSTIC TEST

1. **OTHER DTCS**
    1. With the scan tool, read DTCs.

       Are any DTCs present for Inlet Air Pressure or Intake Manifold Pressure Sensors?

       Yes

       - Troubleshoot other DTCs first.

       No

- Go To 2.

2. **INTERMITTENT CONDITION**
   1. With vehicle in park/neutral, use the accelerator pedal to accelerate the engine speed to 3100-3200 RPM and hold the engine speed for at least 60 seconds.
   2. Return to idle for 60 seconds and then repeat.

   Does P2580 become active?

   Yes

   - Go To 3.

   No

   - Perform the INTERMITTENT CONDITION diagnostic procedure. Refer to **INTERMITTENT CONDITION - 6.7L** .

3. **CHECK THE TURBOCHARGER SPEED SENSOR**

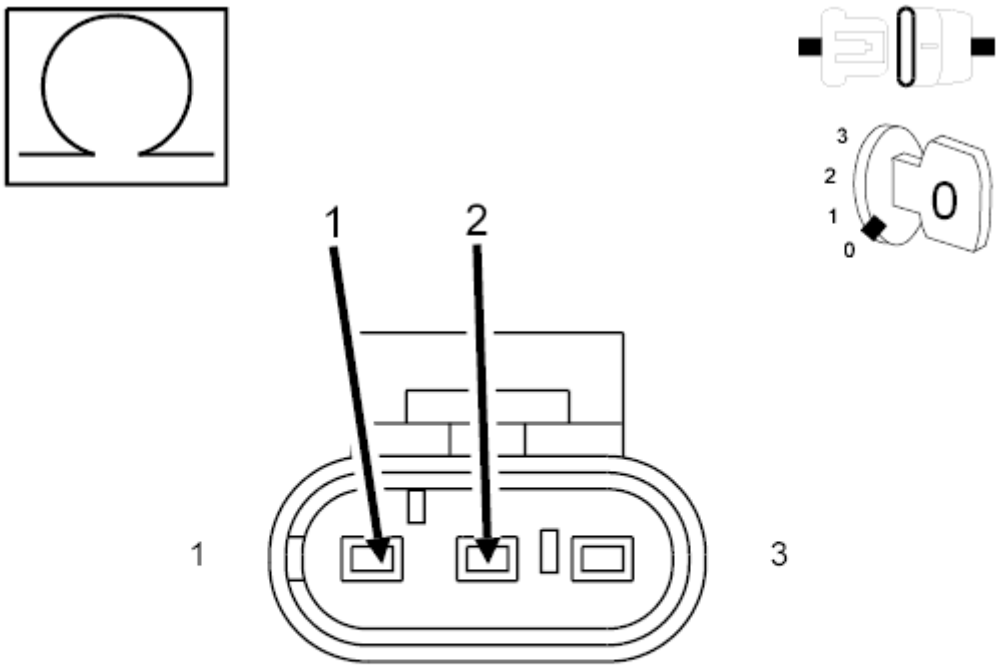

SENSOR-
TURBO SPEED
(6.7L)

Fig. 46: Checking Resistance Of Turbocharger Speed Sensor
Courtesy of CHRYSLER GROUP, LLC

1. Turn Ignition off.
2. Disconnect the Turbocharger Speed Sensor harness connector.

   NOTE: Check connectors - Clean/repair as necessary.

   NOTE: Check harness for cuts and tears - Replace/repair as necessary.

3. Measure the resistance of the Turbo Speed Sensor by probing (K540) Turbo Speed Signal circuit and the (K541) Turbo Speed Sensor Ground circuit at the Turbocharger Speed Sensor.

   Is the resistance between 600 and 1600 Ohms?

   Yes

   - Go To 4.

   No

   - Replace the Turbocharger Speed Sensor in accordance with the service information.
   - Perform the POWERTRAIN VERIFICATION TEST. Refer to **POWERTRAIN VERIFICATION TEST - 6.7L** .

4. **CHECK THE (K540) TURBO SPEED SENSOR SIGNAL CIRCUIT FOR AN OPEN/HIGH RESISTANCE**
   1. Disconnect the PCM C1 harness connector.

      NOTE: Check connectors - Clean/repair as necessary.

   2. Measure the resistance of the (K540) Turbo Speed Sensor Signal circuit between the Turbocharger Speed Sensor harness connector and the PCM C1 harness connector.

      Is the resistance below 5.0 Ohms?

      Yes

      - Go To

      No

      - Repair the (K540) Turbo Speed Sensor Signal circuit for an open or high resistance.
      - Perform the POWERTRAIN VERIFICATION TEST. Refer to **POWERTRAIN VERIFICATION TEST - 6.7L** .

5. **CHECK THE (K541) TURBO SPEED SENSOR RETURN CIRCUIT FOR AN OPEN/HIGH**

RESISTANCE

1. Disconnect the PCM C1 harness connector.

   NOTE: Check connectors - Clean/repair as necessary.

2. Measure the resistance of the (K541) Turbo Speed Sensor Return circuit between the Turbocharger Speed Sensor harness connector and the PCM C1 harness connector.

   Is the resistance below 5.0 Ohms?

   Yes

   - Go To 6.

   No

   - Repair the (K541) Turbo Speed Sensor Ground circuit for an open or high resistance.
   - Perform the POWERTRAIN VERIFICATION TEST. Refer to **POWERTRAIN VERIFICATION TEST - 6.7L** .

6. **CHECK THE (K540) TURBO SPEED SENSOR SIGNAL FOR A SHORT TO GROUND**

   1. Measure the resistance between ground and the (K540) Turbo Speed Signal circuit at the Turbocharger Speed Sensor harness connector.

      Is the resistance below 10k Ohms?

      Yes

      - Go To 7.

      No

      - Repair the short to ground in the (K540) Turbo Speed Signal circuit.
      - Perform the POWERTRAIN VERIFICATION TEST. Refer to **POWERTRAIN VERIFICATION TEST - 6.7L** .

7. **CHECK FOR THE (K540) TURBO SPEED SIGNAL CIRCUIT SHORTED TO THE (K541) TURBO SPEED SENSOR RETURN CIRCUIT**

   1. Measure the resistance between the (K540) Turbo Speed Signal circuit and the (K541) Turbo Speed Sensor Return circuit at the Turbocharger Speed Sensor harness connector.

      Is the resistance below 10k Ohms?

      Yes

      - Go To 8.

No

- Repair the short between the (K540) Turbo Speed Signal circuit and the (K541) Turbo Speed Sensor Return circuit.
- Perform the POWERTRAIN VERIFICATION TEST. Refer to **POWERTRAIN VERIFICATION TEST - 6.7L** .

8. **POWERTRAIN CONTROL MODULE**
    1. Reconnect the PCM C1 harness connector.
    2. Start the engine.
    3. With vehicle in park/neutral, use the accelerator pedal to accelerate the engine speed to 3100-3200 RPM and hold the engine speed for at least 60 seconds.
    4. Return to idle for 60 seconds and then repeat.

    Does DTC P2580 become active during engine operation?

    Yes

    - Replace the Powertrain Control Module in accordance with the service information.
    - Perform the POWERTRAIN VERIFICATION TEST. Refer to **POWERTRAIN VERIFICATION TEST - 6.7L** .

    No

    - The problem may exist in the Turbocharger Speed Sensor circuit or it may exist with other vehicle electronic components. The problem may have been corrected when the harness connections were reconnected. Be certain that the PCM and chassis grounds are in good condition.
    - Perform the INTERMITTENT CONDITION diagnostic procedure. Refer to **INTERMITTENT CONDITION - 6.7L** .

P2609-INTAKE AIR HEATER SYSTEM PERFORMANCE

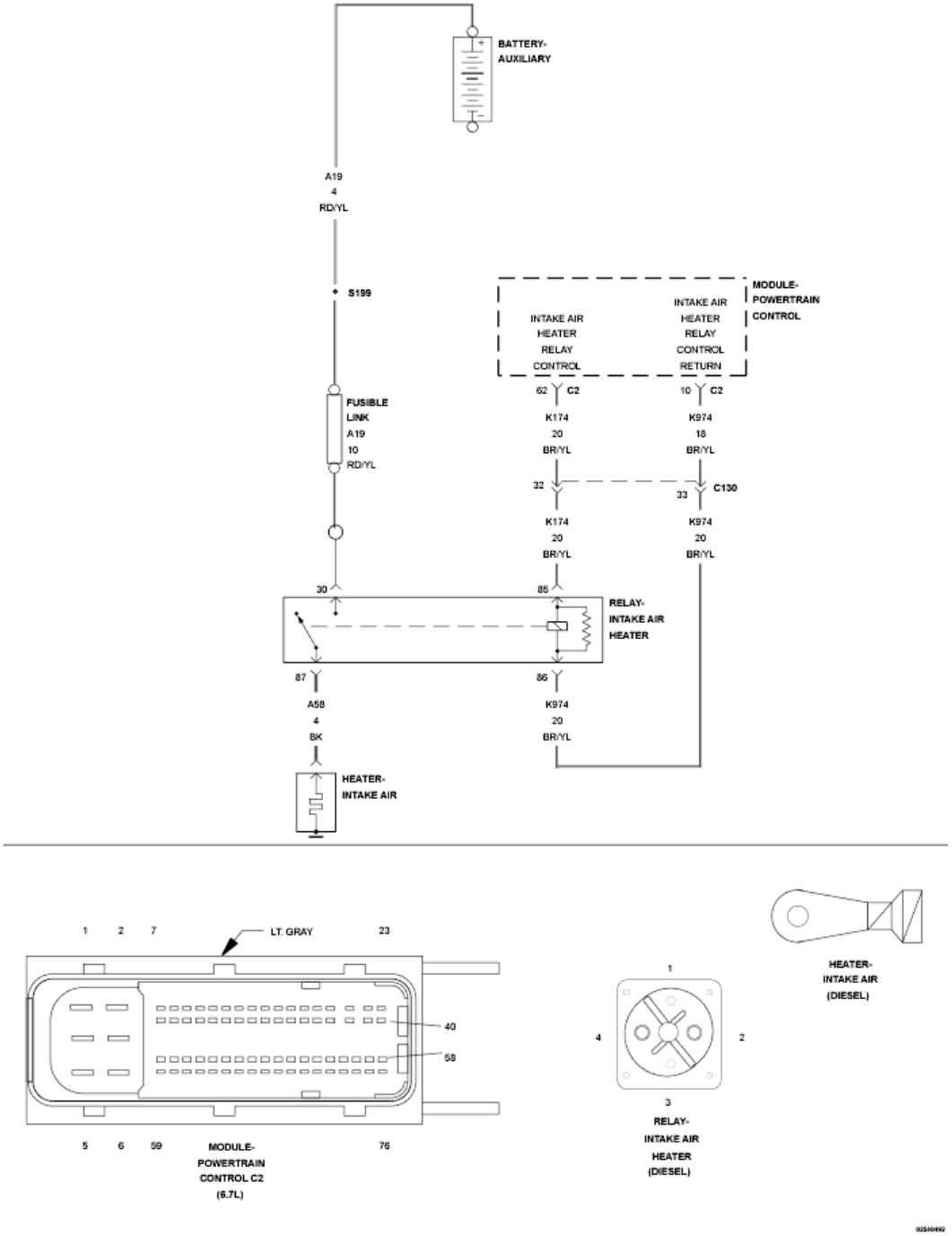

Fig. 47: Intake Air Heater System Circuit Schematic
Courtesy of CHRYSLER GROUP, LLC

For a complete wiring diagram, **refer to appropriate SYSTEM WIRING DIAGRAMS article** .

THEORY OF OPERATION

Heating the inlet air during cold temperatures will increase the fuel efficiency and improves system

performance. An Intake Air Heater is used for this purpose. The Intake Air Heater works in two phases, preheat phase (before engine starts) and post heat phase (after engine starts). Preheat phase typically heats the Intake Air Heater coil during the key-on for about 10 seconds to 30 seconds depending on inlet air temperature. The PCM controls Intake Air Heater operation with the Intake Air Heater Relay, which is located directly behind the air filter box under the fresh air hose. The Intake Air Heater Relay is not a typical type of relay due to the amount of current passing through it. The Intake Air Heater Relay visually resembles a solenoid in appearance. The Intake Air Heater monitor looks for a change in battery voltage as the heater is turned on and off during preheat, to indicate proper operation. The Intake Air Heater performance DTC is a two trip fault. The PCM will turn off the MIL lamp when the monitor runs and passes in 4 consecutive drive cycles.

WHEN MONITORED:

During the preheat cycle, while the wait to start lamp is illuminated.

SET CONDITION:

The Powertrain Control Module (PCM) monitors the battery system voltage and looks for a calibrated drop when the Intake Air Heater is commanded on. The fault is set if the PCM detects a voltage difference below the calibrated value when the Intake Air Heater circuit is commanded on and off during the preheat cycle at key on.

POSSIBLE CAUSES

Possible Causes
VEHICLE BEING JUMP STARTED OR CHARGED WITH AN EXTERNAL VOLTAGE SOURCE
(A19) AUXILIARY BATTERY CABLE OPEN/HIGH RESISTANCE (A58) INTAKE AIR HEATER CIRCUIT OPEN/HIGH RESISTANCE
INTAKE AIR HEATER RELAY INTAKE AIR HEATER

Always perform the Pre-Diagnostic Troubleshooting procedure before proceeding. Refer to PRE-DIAGNOSTIC TROUBLESHOOTING PROCEDURE - 6.7L .

DIAGNOSTIC TEST

1. **ACTIVE DTC**
    1. Ignition on, engine not running.
    2. With the scan tool check for active DTCs.

    Is the DTC active?

    Yes

    - Go To 2.

    No

- Perform the INTERMITTENT CONDITION diagnostic procedure. Refer to **INTERMITTENT CONDITION - 6.7L** .

2. **CHECK THE (A19) AUXILIARY BATTERY CIRCUIT FOR AN OPEN/HIGH RESISTANCE**

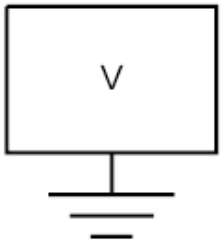

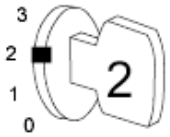

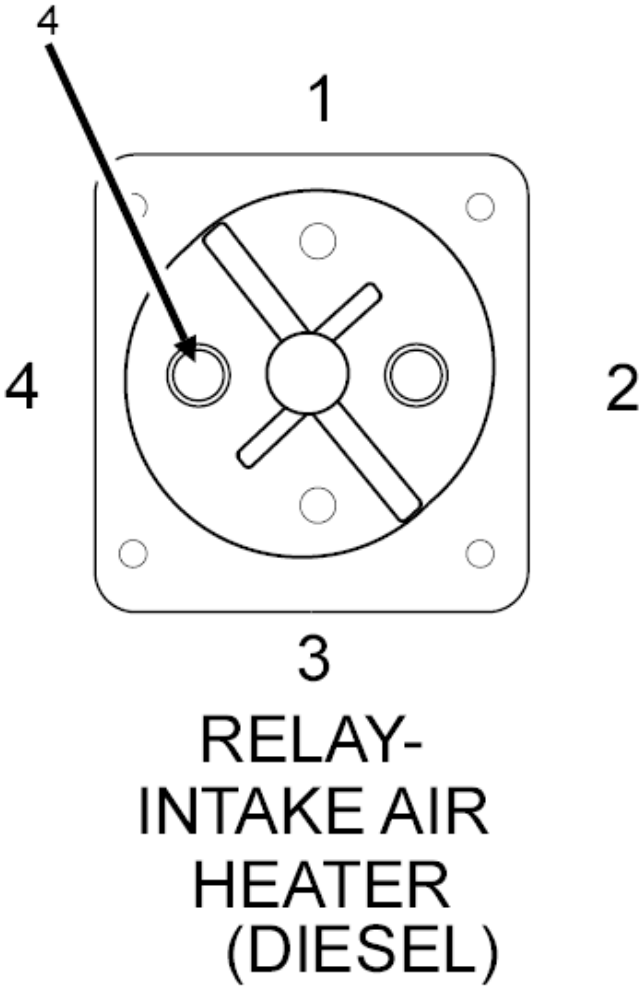

Fig. 48: Using 12-Volt Test Light Connected To Ground To Probe Auxiliary Battery Circuit At Intake Air Heater Relay

NOTE: A loose or poor Battery Ground Cable connection may cause this code to set.

1. Turn ignition on.
2. Using a voltmeter, probe the (A19) Auxiliary Battery circuit at the Intake Air Heater Relay terminal.

   NOTE: It is important for the circuit to be connected and carrying a load during testing. For best results, do not disconnect the circuit at any time during this test procedure.

3. Using a scan tool, actuate the Cold Start Aid Driver 1 Output circuit.

   NOTE: Set the actuation to toggle.

4. Monitor the reading on the voltmeter while the Intake Air Heater circuit is toggling on and off. **Monitor the circuit and let the actuation run until it times out.**

   NOTE: The meter should read equivalent to battery voltage during the entire actuation.

   Does the voltmeter read as described in the note above?

   Yes

   - Go To 3.

   No

   - Repair the (A19) Auxiliary Battery circuit for an open or high resistance. If the Fusible Link is found to be blown, check for a short to ground on the entire (A19) Auxiliary Battery circuit and (A58) Intake Air Heater circuit.
   - Perform the POWERTRAIN VERIFICATION TEST. Refer to **POWERTRAIN VERIFICATION TEST - 6.7L** .

3. **CHECK THE INTAKE AIR HEATER RELAY**

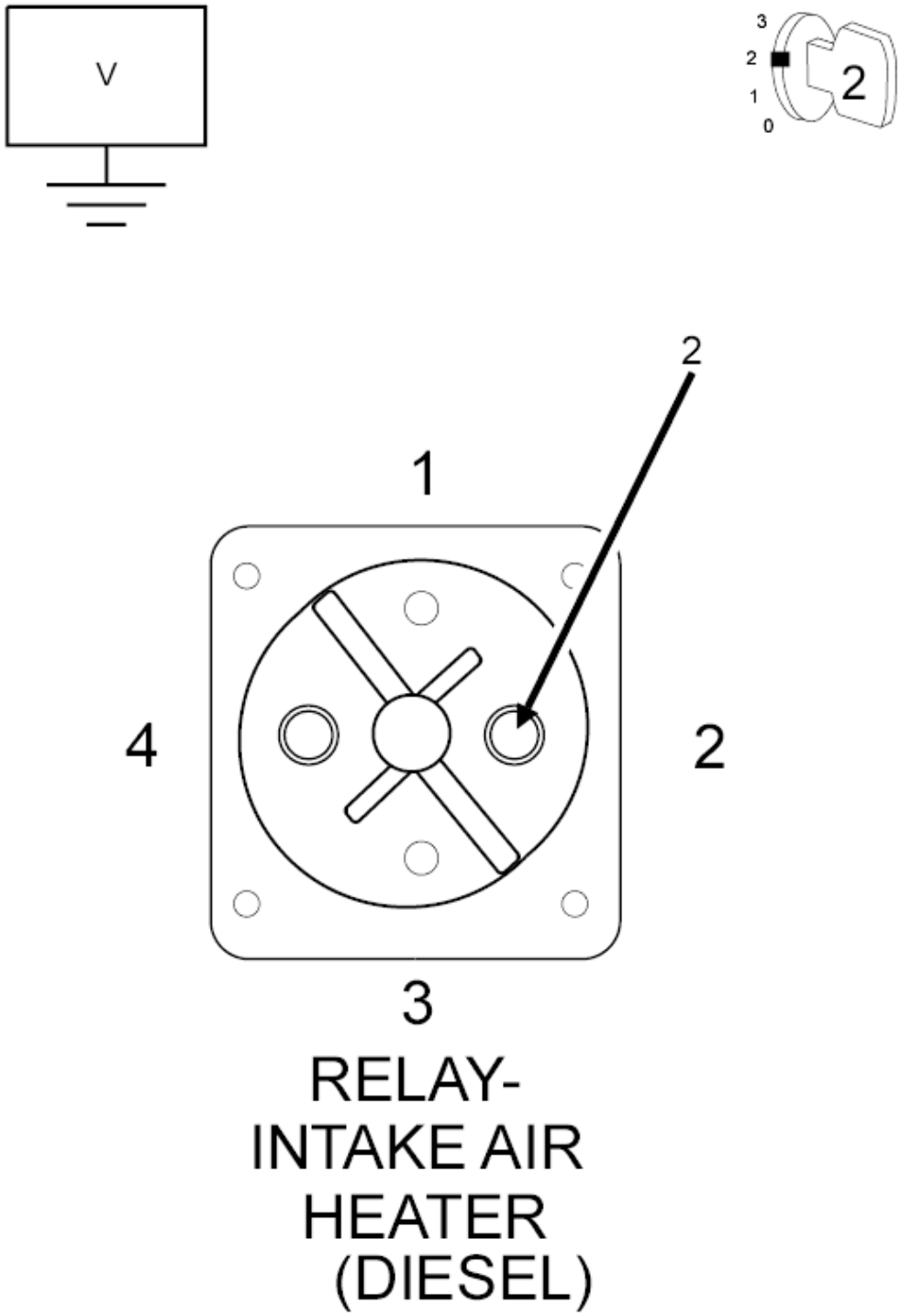

Fig. 49: Using 12-Volt Test Light Connected To Ground To Probe Intake Air Heater Circuit At Intake Air Heater Relay
Courtesy of CHRYSLER GROUP, LLC

CAUTION: Excessive actuation to the Intake Air Heater may overheat and damage the heater assembly. Allow the Intake Air heater to cool for five minutes between each actuation procedure to prevent any possible damage from overheating to occur to the Intake Air Heater.

1. Move the voltmeter to the (A58) Intake Air Heater circuit terminal on the Intake Air Heater Relay terminal.
2. Using a scan tool, actuate the Cold Start Aid Driver 1 Output circuit.

NOTE: Set the actuation to toggle.

3. Monitor the reading on the voltmeter while the Intake Air Heater circuit is toggling on and off. **Monitor the circuit and let the actuation run until it times out.**

NOTE: The meter should read equivalent to battery voltage when the circuit is toggled on, and near zero volts when the circuit is toggled off.

Does the voltmeter read as described in the note above?

Yes

- Go To 4.

No

- Replace the Intake Air Heater Relay in accordance with the service information.
- Perform the POWERTRAIN VERIFICATION TEST. Refer to **POWERTRAIN VERIFICATION TEST - 6.7L** .

4. **CHECK THE (A58) INTAKE AIR HEATER CIRCUIT FOR AN OPEN/HIGH RESISTANCE**

CAUTION: Excessive actuation to the Intake Air Heater may overheat and damage the heater assembly. Allow the Intake Air heater to cool for five minutes between each actuation procedure to prevent any possible damage from overheating to occur to the Intake Air Heater.

1. Move the voltmeter to the (A58) Intake Air Heater circuit connection at the Intake Air Heater.
2. Using a scan tool, actuate the Cold Start Aid Driver 1 Output circuit.

NOTE: Set the actuation to toggle.

3. Monitor the reading on the voltmeter while the Intake Air Heater circuit is toggling on and off. **Monitor the circuit and let the actuation run until it times out.**

NOTE: The meter should read equivalent to battery voltage when the circuit

is toggled on, and near zero volts when the circuit is toggled off.

Does the voltmeter read as described in the note above?

Yes

- Replace the Intake Air Heater in accordance with the service information.
- Perform the POWERTRAIN VERIFICATION TEST. Refer to **POWERTRAIN VERIFICATION TEST - 6.7L** .

No

- Repair the (A58) Intake Air Heater circuit for an open or high resistance.
- Perform the POWERTRAIN VERIFICATION TEST. Refer to **POWERTRAIN VERIFICATION TEST - 6.7L** .

P268C-CYLINDER 1 INJECTOR DATA INCOMPATIBLE

For a complete wiring diagram, **refer to appropriate SYSTEM WIRING DIAGRAMS article** .

THEORY OF OPERATION

Each Fuel Injector has a six digit alphanumeric correction code. The correction code is printed on the intake side of the injector and is used to identify the injector calibration. This code must be entered into the Powertrain Control Module (PCM) using a scan tool.

WHEN MONITORED:

With the ignition on.

SET CONDITION:

The Checksum calculation for the injector correction code failed.

POSSIBLE CAUSES

Possible Causes
INCORRECT FUEL INJECTOR CODE ENTERED FOR THAT CYLINDER

Always perform the Pre-Diagnostic Troubleshooting procedure before proceeding. Refer to PRE-DIAGNOSTIC TROUBLESHOOTING PROCEDURE - 6.7L .

DIAGNOSTIC TEST

1. **INCORRECT INJECTOR CODE ENTERED**
    1. Using the a scan tool view injector correction codes.

NOTE: **See service information for the location of the alphanumeric code on the injector.**

Do the six digits entered into the PCM match the alphanumeric code on the injector?

Yes

- Repair Complete

No

- Read the six digit alphanumeric code on the injector and enter it into the PCM using the scan tool. Key off and wait approximately 75 seconds. Key on, the fault should become stored if entered correctly.
- Perform the POWERTRAIN VERIFICATION TEST. Refer to **POWERTRAIN VERIFICATION TEST - 6.7L** .

P268D-CYLINDER 2 INJECTOR DATA INCOMPATIBLE

For a complete wiring diagram, **refer to appropriate SYSTEM WIRING DIAGRAMS article** .

THEORY OF OPERATION

Each Fuel Injector has a six digit alphanumeric correction code. The correction code is printed on the intake side of the injector and is used to identify the injector calibration. This code must be entered into the Powertrain Control Module (PCM) using a scan tool.

WHEN MONITORED:

With the ignition on.

SET CONDITION:

The Checksum calculation for the injector correction code failed.

POSSIBLE CAUSES

Possible Causes
INCORRECT FUEL INJECTOR CODE ENTERED FOR THAT CYLINDER

Always perform the Pre-Diagnostic Troubleshooting procedure before proceeding. Refer to PRE-DIAGNOSTIC TROUBLESHOOTING PROCEDURE - 6.7L .

DIAGNOSTIC TEST

1. **INCORRECT INJECTOR CODE ENTERED**
    1. Using the a scan tool view injector correction codes.

NOTE: **See service information for the location of the alphanumeric code on the injector.**

Do the six digits entered into the PCM match the alphanumeric code on the injector?

Yes

- Repair Complete.

No

- Read the six digit alphanumeric code on the injector and enter it into the PCM using the scan tool. Key off and wait approximately 75 seconds. Key on, the fault should move to stored if entered correctly.
- Perform the POWERTRAIN VERIFICATION TEST. Refer to **POWERTRAIN VERIFICATION TEST - 6.7L** .

P268E-CYLINDER 3 INJECTOR DATA INCOMPATIBLE

For a complete wiring diagram, **refer to appropriate SYSTEM WIRING DIAGRAMS article** .

THEORY OF OPERATION

Each Fuel Injector has a six digit alphanumeric correction code. The correction code is printed on the intake side of the injector and is used to identify the injector calibration. This code must be entered into the Powertrain Control Module (PCM) using a scan tool.

WHEN MONITORED:

With the ignition on.

SET CONDITION:

The Checksum calculation for the injector correction code failed.

POSSIBLE CAUSES

Possible Causes
INCORRECT FUEL INJECTOR CODE ENTERED FOR THAT CYLINDER

Always perform the Pre-Diagnostic Troubleshooting procedure before proceeding. Refer to PRE-DIAGNOSTIC TROUBLESHOOTING PROCEDURE - 6.7L .

DIAGNOSTIC TEST

1. **INCORRECT INJECTOR CODE ENTERED**
    1. Using the a scan tool view injector correction codes.

NOTE: **See service information for the location of the alphanumeric code on the injector.**

Do the six digits entered into the PCM match the alphanumeric code on the injector?

Yes

- Repair Complete.

No

- Read the six digit alphanumeric code on the injector and enter it into the PCM using the scan tool. Key off and wait approximately 75 seconds. Key on, the fault should move to stored if entered correctly.
- Perform the POWERTRAIN VERIFICATION TEST. Refer to **POWERTRAIN VERIFICATION TEST - 6.7L** .

P268F-CYLINDER 4 INJECTOR DATA INCOMPATIBLE

For a complete wiring diagram, **refer to appropriate SYSTEM WIRING DIAGRAMS article** .

THEORY OF OPERATION

Each Fuel Injector has a six digit alphanumeric correction code. The correction code is printed on the intake side of the injector and is used to identify the injector calibration. This code must be entered into the Powertrain Control Module (PCM) using a scan tool.

WHEN MONITORED:

with the ignition on.

SET CONDITION:

The Checksum calculation for the injector correction code failed.

POSSIBLE CAUSES

Possible Causes
INCORRECT FUEL INJECTOR CODE ENTERED FOR THAT CYLINDER

Always perform the Pre-Diagnostic Troubleshooting procedure before proceeding. Refer to PRE-DIAGNOSTIC TROUBLESHOOTING PROCEDURE - 6.7L .

DIAGNOSTIC TEST

1. **INCORRECT INJECTOR CODE ENTERED**
    1. Using the a scan tool view injector correction codes.

NOTE: **See service information for the location of the alphanumeric code on the injector.**

Do the six digits entered into the PCM match the alphanumeric code on the injector?

Yes

- Repair Complete.

No

- Read the six digit alphanumeric code on the injector and enter it into the PCM using the scan tool. Key off and wait approximately 75 seconds. Key on, the fault should move to stored if entered correctly.
- Perform the POWERTRAIN VERIFICATION TEST. Refer to **POWERTRAIN VERIFICATION TEST - 6.7L** .

P2690-CYLINDER 5 INJECTOR DATA INCOMPATIBLE

For a complete wiring diagram, **refer to appropriate SYSTEM WIRING DIAGRAMS article** .

THEORY OF OPERATION

Each Fuel Injector has a six digit alphanumeric correction code. The correction code is printed on the intake side of the injector and is used to identify the injector calibration. This code must be entered into the Powertrain Control Module (PCM) using a scan tool.

WHEN MONITORED:

With the ignition on.

SET CONDITION:

The Checksum calculation for the injector correction code failed.

POSSIBLE CAUSES

Possible Causes
INCORRECT FUEL INJECTOR CODE ENTERED FOR THAT CYLINDER

Always perform the Pre-Diagnostic Troubleshooting procedure before proceeding. Refer to PRE-DIAGNOSTIC TROUBLESHOOTING PROCEDURE - 6.7L .

DIAGNOSTIC TEST

1. **INCORRECT INJECTOR CODE ENTERED**
    1. Using the a scan tool view injector correction codes.

NOTE: **See service information for the location of the alphanumeric code on the injector.**

Do the six digits entered into the PCM match the alphanumeric code on the injector?

Yes

- Repair Complete.

No

- Read the six digit alphanumeric code on the injector and enter it into the PCM using the scan tool. Key off and wait approximately 75 seconds. Key on, the fault should move to stored if entered correctly.
- Perform the POWERTRAIN VERIFICATION TEST. Refer to **POWERTRAIN VERIFICATION TEST - 6.7L** .

P2691-CYLINDER 6 INJECTOR DATA INCOMPATIBLE

For a complete wiring diagram, **refer to appropriate SYSTEM WIRING DIAGRAMS article** .

THEORY OF OPERATION

Each Fuel Injector has a six digit alphanumeric correction code. The correction code is printed on the intake side of the injector and is used to identify the injector calibration. This code must be entered into the Powertrain Control Module (PCM) using a scan tool.

WHEN MONITORED:

With the ignition on.

SET CONDITION:

The Checksum calculation for the injector correction code failed.

POSSIBLE CAUSES

Possible Causes
INCORRECT FUEL INJECTOR CODE ENTERED FOR THAT CYLINDER

Always perform the Pre-Diagnostic Troubleshooting procedure before proceeding. Refer to PRE-DIAGNOSTIC TROUBLESHOOTING PROCEDURE - 6.7L .

DIAGNOSTIC TEST

1. **INCORRECT INJECTOR CODE ENTERED**
    1. Using the a scan tool view injector correction codes.

NOTE: **See service information for the location of the alphanumeric code on the injector.**

Do the six digits entered into the PCM match the alphanumeric code on the injector?

Yes

- Repair Complete.

No

- Read the six digit alphanumeric code on the injector and enter it into the PCM using the scan tool. Key off and wait approximately 75 seconds. Key on, the fault should move to stored if entered correctly.
- Perform the POWERTRAIN VERIFICATION TEST. Refer to **POWERTRAIN VERIFICATION TEST - 6.7L** .

P2BAC-NOX EXCEEDENCE - DEACTIVATION OF EGR

For a complete wiring diagram, **refer to appropriate SYSTEM WIRING DIAGRAMS article** .

THEORY OF OPERATION

The Powertrain Control Module (PCM) continuously monitors the engine's fault code status to determine if any fault codes critical to successful engine operation are active. The PCM will illuminate the MIL Lamp immediately after the diagnostic runs and fails. The DTC will become inactive as soon as all active critical fault codes have been repaired.

WHEN MONITORED:

Continuous with the engine running.

SET CONDITION:

The PCM detects that certain critical fault codes related to engine operation are active.

POSSIBLE CAUSES

Possible Causes
CRITICAL ENGINE PERFORMANCE DTCS PRESENT

Always perform the Pre-Diagnostic Troubleshooting procedure before proceeding. Refer to PRE-DIAGNOSTIC TROUBLESHOOTING PROCEDURE - 6.7L .

DIAGNOSTIC TEST

1. **CHECK FOR ACTIVE DTCS**

1. Turn the ignition on.
2. With the scan tool, View DTCs.

   Is the DTC active?

   Yes

   - This is an information only DTC and indicates an engine power derate has been implemented. Repair all other active DTCs present and this DTC will become inactive.
   - Perform the POWERTRAIN VERIFICATION TEST. Refer to **POWERTRAIN VERIFICATION TEST - 6.7L** .

   No

   - Perform the INTERMITTENT CONDITION diagnostic procedure. Refer to **INTERMITTENT CONDITION - 6.7L** .

U0001-CAN C BUS

For a complete wiring diagram, **refer to appropriate SYSTEM WIRING DIAGRAMS article** .

WHEN MONITORED:

Continuously with the ignition on. Battery voltage between 9.0 and 16.0 Volts. Engine run time greater than three seconds.

SET CONDITION:

The Powertrain Control Module (PCM) loses communication over the CAN C Bus circuit.

POSSIBLE CAUSES

Possible Causes
CAN C BUS OPEN OR SHORTED CONDITION POWERTRAIN CONTROL MODULE (PCM)

Always perform the Pre-Diagnostic Troubleshooting procedure before proceeding. Refer to PRE-DIAGNOSTIC TROUBLESHOOTING PROCEDURE - 6.7L .

DIAGNOSTIC TEST

1. **ACTIVE DTC**
   1. Ignition on, engine not running.
   2. With a scan tool, read TIPM DTCs.

      Is the DTC active at this time?

Yes

- **Refer to DIAGNOSIS AND TESTING** and perform the U0001 Can C Bus diagnostic procedure.

No

- **Refer to DIAGNOSIS AND TESTING** and perform the Stored Lost Communication DTCs diagnostic procedure.

U0101-LOST COMMUNICATION WITH TCM

For a complete wiring diagram, **refer to appropriate SYSTEM WIRING DIAGRAMS article** .

WHEN MONITORED:

With the ignition on. Battery voltage between 10.0 and 16.0 Volts.

SET CONDITION:

The Powertrain Control Module (PCM) doesn't receive a Bus Message from the Transmission Control Module for approximately two to five seconds.

POSSIBLE CAUSES

Possible Causes
CAN BUS FAILURE OPEN OR SHORTED CONDITION
DTCS RELATED TO BATTERY VOLTAGE, IGNITION, OR VIN MESSAGES
TRANSMISSION CONTROL MODULE
POWERTRAIN CONTROL MODULE

Always perform the Pre-Diagnostic Troubleshooting procedure before proceeding. Refer to PRE-DIAGNOSTIC TROUBLESHOOTING PROCEDURE - 6.7L .

DIAGNOSTIC TEST

1. **ACTIVE DTC**
    1. Ignition on, engine not running.
    2. With a scan tool, read ECM DTCs.

    Is the DTC active at this time?

    Yes

    - Perform the appropriate diagnostic procedure. Refer to **DIAGNOSIS AND TESTING** .

No

- Perform the INTERMITTENT CONDITION diagnostic procedure. Refer to **INTERMITTENT CONDITION - 6.7L** .

U010C-LOST COMMUNICATION WITH TURBOCHARGER/SUPERCHARGER CONTROL MODULE

For a complete wiring diagram, **refer to appropriate SYSTEM WIRING DIAGRAMS article** .

THEORY OF OPERATION

The Variable Geometry Turbocharger (VGT) is electronically activated by the Turbo Actuator. The Turbo Actuator is a smart device that receives information via the J1939 Datalink from the Powertrain Control Module (PCM). The Turbo Actuator performs its own diagnostics and reports failures back to the PCM over the J1939 Datalink.

WHEN MONITORED:

with the ignition on.

SET CONDITION:

The Powertrain Control Module (PCM) does not receive a message from the Turbo Actuator in a calibrated amount of time.

POSSIBLE CAUSES

Possible Causes
POWER SUPPLY TO TURBO ACTUATOR OPEN
POWER SUPPLY TO TURBO ACTUATOR SHORTED TO GROUND
(D130) J1939 DATALINK (+) CIRCUIT OPEN/HIGH RESISTANCE
(D131) J1939 DATALINK (-) CIRCUIT OPEN/HIGH RESISTANCE
(D130) J1939 DATALINK (+) CIRCUIT SHORTED TO BATTERY OR GROUND
(D131) J1939 DATALINK (-) CIRCUIT SHORTED TO BATTERY OR GROUND
J1939 DATALINK (+) CIRCUIT SHORTED TO ANOTHER CIRCUIT
J1939 DATALINK (-) CIRCUIT SHORTED TO ANOTHER CIRCUIT
J1939 DATALINK COMPONENT INTERNALLY SHORTED
TURBOCHARGER
POWERTRAIN CONTROL MODULE (PCM)

Always perform the Pre-Diagnostic Troubleshooting procedure before proceeding. Refer to PRE-DIAGNOSTIC TROUBLESHOOTING PROCEDURE - 6.7L .

DIAGNOSTIC TEST

1. **U010C ACTIVE**

   Is DTC U010C Active?

   Yes

   - Go To 2.

   No

   - Perform the INTERMITTENT CONDITION diagnostic procedure. Refer to **INTERMITTENT CONDITION - 6.7L** .

2. **OTHER DTCS**

   NOTE: Repair any Voltage Low DTCs before proceeding with this test procedure.

   NOTE: The J1939 Datalink is a BUS circuit which the PCM uses to communicate with the Turbo Actuator, DEF Dosing Control Unit, NOx Sensor 1/1 and NOx Sensor 1/2. If the J1939 Datalink is shorted or one of these components is internally shorted, communication will be lost and DTCs will set against ALL of these components.

   Are there lost communication DTCs present against All of the components listed in the note above?

   Yes

   - Go To 5.

   No

   - Go To 3.

3. **CHECK THE POWER SUPPLY TO TURBO ACTUATOR FOR AN OPEN**
   1. Turn the ignition off.
   2. Disconnect the Turbo Actuator harness connector.

      NOTE: Check connectors - Clean/repair as necessary.

   3. Ignition on, engine not running.
   4. Measure the voltage between the Turbo Actuator Power Supply circuit and the Turbo Actuator Return circuit at the Turbo Actuator harness connector.

      NOTE: Check the voltage at key-on and while cranking the engine.

      Is the voltage above 11.0 Volts?

Yes

- Go To 4.

No

- Repair/Replace the Smart Power Relay harness.
- Perform the POWERTRAIN VERIFICATION TEST. Refer to **POWERTRAIN VERIFICATION TEST - 6.7L** .

4. **CHECK THE J1939 DATALINK OPEN/HIGH RESISTANCE**
   1. Turn the ignition off.
   2. Disconnect both NOx Sensor Module harness connectors.
   3. Disconnect the DEF Dosing Control Unit C2 harness connector.
   4. Disconnect the PCM C2 harness connector.

   NOTE: Check connectors - Clean/repair as necessary.

   5. Measure the resistance of the J1939 Datalink (+) circuit between the Turbo Actuator harness connector and the PCM C2 harness connector.
   6. Measure the resistance of the J1939 Datalink (-) circuit between the Turbo Actuator harness connector and the PCM C2 harness connector.

   Is the resistance below 5.0 Ohms for both circuits?

   Yes

   - Replace the Turbocharger Assembly in accordance with the service information.
   - Perform the POWERTRAIN VERIFICATION TEST. Refer to **POWERTRAIN VERIFICATION TEST - 6.7L** .

   No

   - Repair the J1939 circuit that measured above 5.0 Ohms for an open or high resistance.
   - Perform the POWERTRAIN VERIFICATION TEST. Refer to **POWERTRAIN VERIFICATION TEST - 6.7L** .

5. **CHECK THE COMPONENTS ON THE J1939 DATALINK**

NOTE: Disconnect only one component at a time during this next step. If the DTCs for the components that are STILL CONNECTED change from active to stored, the component that was disconnected is faulty. If all of the DTCs remain active, then the disconnected component is not the problem. Reconnect each component before going on to the next one so that only one component is disconnected at a time.

1. Turn the ignition off.
2. Disconnect the Turbo Actuator harness connector. Cycle the ignition key on and off three times ending with the ignition on. Leave the ignition in the off position for 75 seconds each time.

   NOTE: Monitor the status of the DTCs for the remaining connected components with the scan tool.

3. Turn the ignition off and reconnect the Turbo Actuator harness connector.
4. Disconnect the NOx Sensor Module 1/1 harness connector. Cycle the ignition key on and off three times ending with the ignition on. Leave the ignition in the off position for 75 seconds each time.

   NOTE: Monitor the status of the DTCs for the remaining connected components with the scan tool.

5. Turn the ignition off and reconnect the NOx Sensor Module 1/1 harness connector.
6. Disconnect the NOx Sensor Module 1/2 harness connector. Cycle the ignition key on and off three times ending with the ignition on. Leave the ignition in the off position for 75 seconds each time.

   NOTE: Monitor the status of the DTCs for the remaining connected components with the scan tool.

7. Turn the ignition off and reconnect the NOx Sensor Module 1/2 harness connector.
8. Disconnect the DEF Dosing Control Unit C2 harness connector. Cycle the ignition key on and off three times ending with the ignition on. Leave the ignition in the off position for 75 seconds each time.

   NOTE: Monitor the status of the DTCs for the remaining connected components with the scan tool.

   Did the status of the DTCs change to stored for the components STILL CONNECTED when disconnecting any one of the components listed above?

   Yes

   - Replace the component that caused the DTC change from active to stored in accordance with the service information.
   - Perform the POWERTRAIN VERIFICATION TEST. Refer to **POWERTRAIN VERIFICATION TEST - 6.7L** .

   No

   - Go To 6.

6. **CHECK THE J1939 DATALINK FOR A SHORT TO GROUND**
   1. Turn the ignition off.

2. Disconnect the Turbo Actuator, NOx Sensor Modules, DEF Dosing Control Unit, and the PCM C2 harness connectors.
3. Measure the resistance between ground and the J1939 Datalink (+) circuit at the PCM C2 harness connector.
4. Measure the resistance between ground and the J1939 Datalink (-) circuit at the PCM C2 harness connector.

   Is the resistance above 10k Ohms for both circuits?

   Yes

   - Go To 7.

   No

   - Repair the J1939 circuit that measured below 10k Ohms for a short to ground.
   - Perform the POWERTRAIN VERIFICATION TEST. Refer to **POWERTRAIN VERIFICATION TEST - 6.7L** .

7. **CHECK THE J1939 DATALINK FOR A SHORT**
   1. Measure the resistance between the J1939 Datalink (+) circuit at the PCM C2 harness connector and all other circuits in the PCM C2 harness connector.
   2. Measure the resistance between the J1939 Datalink (-) circuit at the PCM C2 harness connector and all other circuits in the PCM C2 harness connector.

      NOTE: Disregard any resistance between 50 and 70 Ohms between the J1939 (+) and the J1939 Datalink (-) pins.

      Is the resistance above 10k Ohms for both measurements?

      Yes

      - Go To 8.

      No

      - Repair the J1939 circuit for a short circuit.
      - Perform the POWERTRAIN VERIFICATION TEST. Refer to **POWERTRAIN VERIFICATION TEST - 6.7L** .

8. **CHECK THE J1939 DATALINK CIRCUITS FOR AN OPEN/HIGH RESISTANCE**
   1. Measure the resistance of the J1939 Datalink (+) circuit between the Turbo Actuator harness connector and the PCM C2 harness connector.
   2. Measure the resistance of the J1939 Datalink (-) circuit between the Turbo Actuator harness connector and the PCM C2 harness connector.

Is the resistance below 5.0 Ohms for both circuits?

Yes

- Replace the Powertrain Control Module in accordance with the service information. Refer to **MODULE, POWERTRAIN CONTROL, 6.7L DIESEL, REMOVAL** .
- Perform the POWERTRAIN VERIFICATION TEST. Refer to **POWERTRAIN VERIFICATION TEST - 6.7L** .

No

- Repair the J1939 circuit for an open or high resistance.
- Perform the POWERTRAIN VERIFICATION TEST. Refer to **POWERTRAIN VERIFICATION TEST - 6.7L** .

U010E-LOST COMMUNICATION WITH DIESEL EXHAUST FLUID CONTROL UNIT

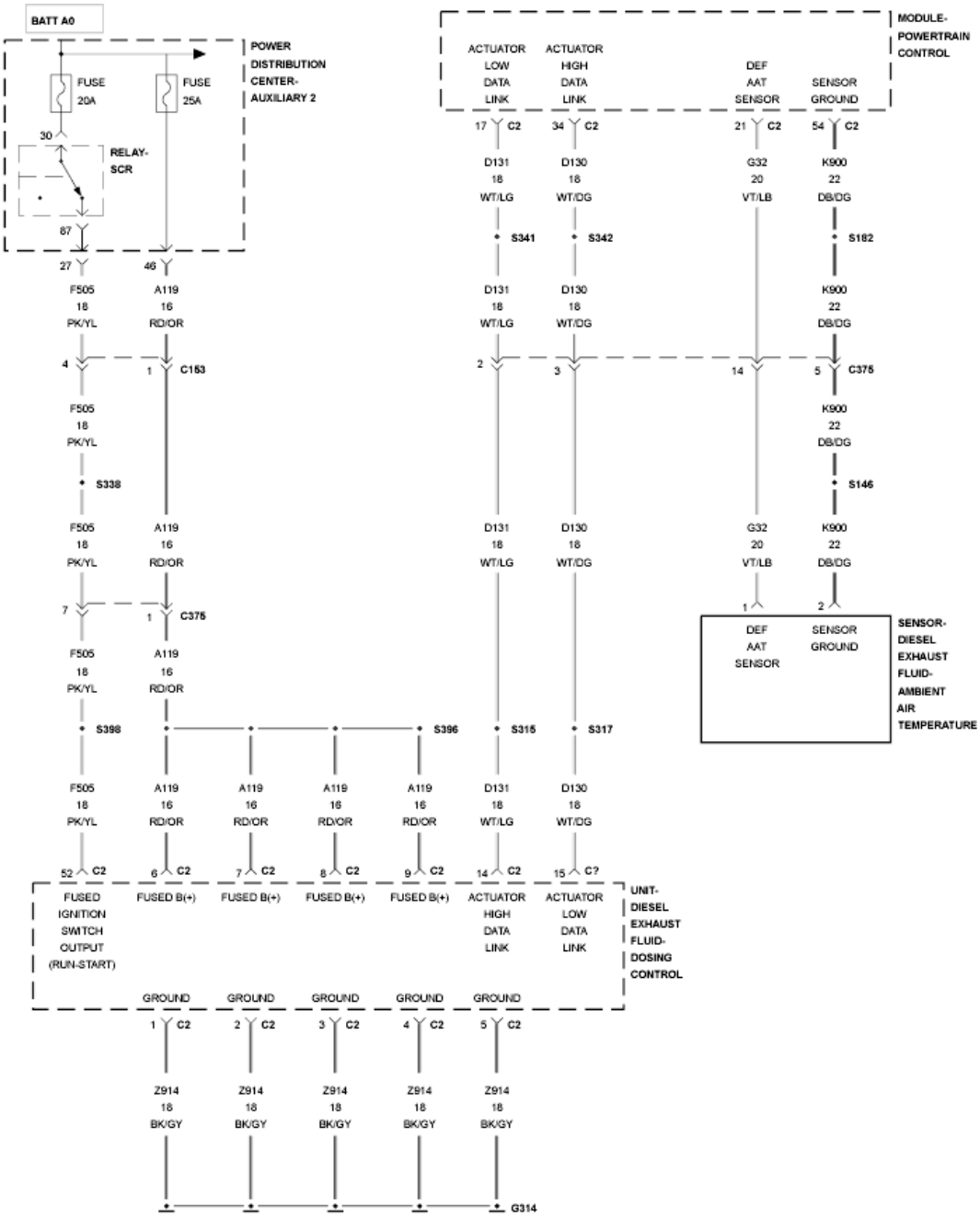

Fig. 50: Diesel Exhaust Fluid (DEF) Dosing Control Unit Wiring Diagram
Courtesy of CHRYSLER GROUP, LLC

For a complete wiring diagram, **refer to appropriate SYSTEM WIRING DIAGRAMS article** .

THEORY OF OPERATION

The Diesel Exhaust Fluid (DEF) Dosing Control Unit is used to control the operation and monitoring of the Diesel Exhaust Fluid system. The DEF Dosing Control Unit shares information with the Powertrain Control Module over the J1939 Data Link. The DEF Dosing Control Unit will illuminate the MIL light via the PCM

immediately after the diagnostics runs and fails. The DEF Dosing Control Unit will turn off the MIL light via the PCM when the monitor runs and passes in three consecutive key cycles.

WHEN MONITORED:

Continuously with the ignition on.

SET CONDITION:

Data link information between the DEF Dosing Control Unit and the Powertrain Control Module has been lost.

POSSIBLE CAUSES

Possible Causes
(A119) DEF DOSING CONTROL UNIT BATTERY SUPPLY CIRCUIT OPEN/HIGH RESISTANCE
(Z914) DEF DOSING CONTROL UNIT GROUND CIRCUIT OPEN/HIGH RESISTANCE
(F505) IGNITION FEED CIRCUIT OPEN/HIGH RESISTANCE
(F505) FUSED IGNITION SWITCH OUTPUT CIRCUIT SHORTED TO GROUND
(D130) J1939 DATALINK (+) CIRCUIT OPEN/HIGH RESISTANCE
(D131) J1939 DATALINK (-) CIRCUIT OPEN/HIGH RESISTANCE
(D130) J1939 DATALINK (+) CIRCUIT SHORTED TO BATTERY OR GROUND
(D131) J1939 DATALINK (-) CIRCUIT SHORTED TO BATTERY OR GROUND
J1939 DATALINK (+) CIRCUIT SHORTED TO ANOTHER CIRCUIT
J1939 DATALINK (-) CIRCUIT SHORTED TO ANOTHER CIRCUIT
J1939 DATALINK COMPONENT INTERNALLY SHORTED
DEF DOSING CONTROL UNIT
POWERTRAIN CONTROL MODULE (PCM)

Always perform the Pre-Diagnostic Troubleshooting procedure before proceeding. Refer to PRE-DIAGNOSTIC TROUBLESHOOTING PROCEDURE - 6.7L .

DIAGNOSTIC TEST

1. **U010E ACTIVE**
    1. Ignition on, engine not running.
    2. With the scan tool, read DTCs.

    Is DTC U010E Active?

    Yes

    - Go To 2.

    No

- Perform the INTERMITTENT CONDITION diagnostic procedure. Refer to **INTERMITTENT CONDITION - 6.7L** .

2. **OTHER DTCS**

NOTE: **Repair any Voltage Low DTCs before proceeding with this test procedure.**

NOTE: **The J1939 Datalink is a BUS circuit which the PCM uses to communicate with the Turbo Actuator, DEF Dosing Control Unit, NOx Sensor 1/1 and NOx Sensor 1/2. If the J1939 Datalink is shorted or one of these components is internally shorted, communication will be lost and DTCs will set against ALL of these components.**

Are there lost communication DTCs present against All of the components listed in the note above?

Yes

- Go To 7.

No

- Go To 3.

3. **CHECK THE (A119) DEF DOSING CONTROL UNIT BATTERY SUPPLY CIRCUIT FOR AN OPEN/HIGH RESISTANCE**
   1. Turn the ignition off.
   2. Disconnect the DEF Dosing Control Unit C2 harness connector.

      NOTE: **Check connectors - Clean/repair as necessary.**

   3. Measure the voltage of all of the (A119) DEF Dosing Control Unit Battery Supply circuits at the DEF Dosing Control Unit C2 harness connector.

      NOTE: **Check the voltage at key-on and during engine cranking.**

      Is the voltage within 1.0 Volt of battery voltage?

      Yes

      - Go To 4.

      No

      - Using the wiring diagram as a guide, repair the (A119) DEF Dosing Control Unit Battery Supply circuit.
      - Perform the POWERTRAIN VERIFICATION TEST. Refer to **POWERTRAIN**

VERIFICATION TEST - 6.7L .

4. **CHECK THE (F505) IGNITION FEED CIRCUIT FOR AN OPEN/HIGH RESISTANCE**
   1. Turn the ignition on, engine not running.
   2. Measure the voltage of all of the (F505) Ignition Feed circuits at the DEF Dosing Control Unit C2 harness connector.

      Is the voltage within 1.0 Volt of battery voltage?

      Yes

      - Go To 5.

      No

      - Using the wiring diagram as a guide, repair the (F505) Ignition Feed circuit.
      - Perform the POWERTRAIN VERIFICATION TEST. Refer to **POWERTRAIN VERIFICATION TEST - 6.7L** .
5. **CHECK THE (Z914) DEF DOSING CONTROL UNIT GROUND CIRCUIT FOR AN OPEN/HIGH RESISTANCE**
   1. Turn the ignition off.
   2. Measure the resistance between ground and the (Z914) DEF Dosing Control Ground circuits at the DEF Dosing Control Unit C2 harness connector.

      Is the resistance below 5.0 Ohms for all of the ground circuits?

      Yes

      - Go To 6.

      No

      - Using the wiring diagram as a guide, repair the (Z914) DEF Dosing Control Unit Ground circuit.
      - Perform the POWERTRAIN VERIFICATION TEST. Refer to **POWERTRAIN VERIFICATION TEST - 6.7L** .
6. **CHECK THE J1939 DATALINK CIRCUITS FOR AN OPEN/HIGH RESISTANCE**
   1. Disconnect the Turbo Actuator harness connector.
   2. Disconnect both NOx Sensor Module harness connectors.
   3. Disconnect the PCM C2 harness connector.

      NOTE: Check connectors - Clean/repair as necessary.

   4. Measure the resistance of the J1939 Datalink (+) circuit between the DEF Dosing Control Unit C2 harness connector and the PCM C2 harness connector.

5. Measure the resistance of the J1939 Datalink (-) circuit between the DEF Dosing Control Unit C2 harness connector and the PCM C2 harness connector.

   Is the resistance below 5.0 Ohms for both circuits?

   Yes

   - Replace the DEF Dosing Control Unit in accordance with the service information. Refer to **UNIT, DIESEL EXHAUST FLUID DOSING CONTROL, REMOVAL** .
   - Perform the POWERTRAIN VERIFICATION TEST. Refer to **POWERTRAIN VERIFICATION TEST - 6.7L** .

   No

   - Repair the J1939 circuit that measured above 5.0 Ohms for an open or high resistance.
   - Perform the POWERTRAIN VERIFICATION TEST. Refer to **POWERTRAIN VERIFICATION TEST - 6.7L** .

7. **CHECK THE COMPONENTS ON THE J1939 DATALINK**

NOTE: **Disconnect only one component at a time during this next step. If the DTCs for the components that are STILL CONNECTED change from active to stored, the component that was disconnected is faulty. If all of the DTCs remain active, then the disconnected component is not the problem. Reconnect each component before going on to the next one so that only one component is disconnected at a time.**

1. Turn the ignition off.
2. Disconnect the Turbo Actuator harness connector. Cycle the ignition key on and off 3 times ending with the ignition on. Leave the ignition in the off position for 75 seconds each time.

   NOTE: **Monitor the status of the DTCs for the remaining connected components with the scan tool.**

3. Turn the ignition off and reconnect the Turbo Actuator harness connector.
4. Disconnect the NOx Sensor Module 1/1 harness connector. Cycle the ignition key on and off 3 times ending with the ignition on. Leave the ignition in the off position for 75 seconds each time.

   NOTE: **Monitor the status of the DTCs for the remaining connected components with the scan tool.**

5. Turn the ignition off and reconnect the NOx Sensor Module 1/1 harness connector.
6. Disconnect the NOx Sensor Module 1/2 harness connector. Cycle the ignition key on and off 3 times ending with the ignition on. Leave the ignition in the off position for 75 seconds each time.

NOTE: **Monitor the status of the DTCs for the remaining connected components with the scan tool.**

7. Turn the ignition off and reconnect the NOx Sensor Module 1/2 harness connector.
8. Disconnect the DEF Dosing Control Unit C2 harness connector. Cycle the ignition key on and off 3 times ending with the ignition on. Leave the ignition in the off position for 75 seconds each time.

NOTE: **Monitor the status of the DTCs for the remaining connected components with the scan tool.**

Did the status of the DTCs change to stored for the components STILL CONNECTED when disconnecting any one of the components listed above?

Yes

- Replace the component that caused the DTC change from active to stored in accordance with the service information.
- Perform the POWERTRAIN VERIFICATION TEST. Refer to **POWERTRAIN VERIFICATION TEST - 6.7L** .

No

- Go To 8.

8. **CHECK THE J1939 DATALINK CIRCUITS FOR A SHORT TO GROUND**
   1. Turn the ignition off.
   2. Disconnect the Turbo Actuator, NOx Sensor Modules, DEF Dosing Control Unit, and the PCM C2 harness connectors.
   3. Measure the resistance between ground and the J1939 Datalink (+) circuit at the PCM C2 harness connector.
   4. Measure the resistance between ground and the J1939 Datalink (-) circuit at the PCM C2 harness connector.

   Is the resistance above 10k Ohms for both circuits?

   Yes

   - Go To 9.

   No

   - Repair the J1939 circuit that measured below 10k Ohms for a short to ground.
   - Perform the POWERTRAIN VERIFICATION TEST. Refer to **POWERTRAIN VERIFICATION TEST - 6.7L** .
9. **CHECK THE J1939 DATALINK CIRCUITS FOR A SHORT**

1. Measure the resistance between the J1939 Datalink (+) circuit at the PCM C2 harness connector and all other circuits in the PCM C2 harness connector.
2. Measure the resistance between the J1939 Datalink (-) circuit at the PCM C2 harness connector and all other circuits in the PCM C2 harness connector.

NOTE: Disregard any resistance between 50 and 70 Ohms between the J1939 (+) and the J1939 Datalink (-) pins.

Is the resistance above 10k Ohms for both measurements?

Yes

- Go To 10.

No

- Repair the J1939 circuit for a short circuit.
- Perform the POWERTRAIN VERIFICATION TEST. Refer to **POWERTRAIN VERIFICATION TEST - 6.7L** .

10. **CHECK THE J1939 DATALINK CIRCUITS FOR AN OPEN/HIGH RESISTANCE**
    1. Measure the resistance of the J1939 Datalink (+) circuit between the DEF Dosing Control Unit C2 harness connector and the PCM C2 harness connector.
    2. Measure the resistance of the J1939 Datalink (-) circuit between the DEF Dosing Control Unit C2 harness connector and the PCM C2 harness connector.

    Is the resistance below 5.0 Ohms for both circuits?

    Yes

    - Replace the Powertrain Control Module in accordance with the service information. Refer to **MODULE, POWERTRAIN CONTROL, 6.7L DIESEL, REMOVAL** .
    - Perform the POWERTRAIN VERIFICATION TEST. Refer to **POWERTRAIN VERIFICATION TEST - 6.7L** .

    No

    - Repair the J1939 circuit for an open or high resistance.
    - Perform the POWERTRAIN VERIFICATION TEST. Refer to **POWERTRAIN VERIFICATION TEST - 6.7L** .

U0121-LOST COMMUNICATION WITH ANTI-LOCK BRAKE MODULE

For a complete wiring diagram, **refer to appropriate SYSTEM WIRING DIAGRAMS article** .

WHEN MONITORED:

Ignition run time is greater than one second. Battery voltage between 9.0 and 16.0 Volts. Engine run time greater than three seconds.

SET CONDITION:

The Powertrain Control Module (PCM) doesn't receive an ABS message over the CAN C circuit for seven consecutive seconds.

POSSIBLE CAUSES

Possible Causes
CAN C BUS OPEN OR SHORTED CONDITION
ABS MODULE
TOTALLY INTEGRATED POWER MODULE (TIPM)
POWERTRAIN CONTROL MODULE (PCM)

DIAGNOSTIC TEST

1. **ACTIVE DTC**
    1. Ignition on, engine not running.
    2. With a scan tool, read PCM DTCs.

    Is the DTC active at this time?

    Yes

    - **Refer to DIAGNOSIS AND TESTING** and perform the U0121-Lost Communication with Anti-lock Brake Module diagnostic procedure.

    No

    - **Refer to DIAGNOSIS AND TESTING** and perform the Stored Lost Communication DTCs diagnostic procedure.

U0141-LOST COMMUNICATION WITH IPM (FCM/TIPM)

For a complete wiring diagram, **refer to appropriate SYSTEM WIRING DIAGRAMS article** .

WHEN MONITORED:

Continuously when the ignition is on.

The battery voltage between 10.0 and 16.0 Volts.

Ignition Off Draw (IOD) fuse installed.

Totally Integrated Power Module (TIPM) is configured correctly.

SET CONDITION:

Bus messages not received from the Totally Integrated Power Module (TIPM) for approximately two to five seconds.

POSSIBLE CAUSES

Possible Causes
CAN BUS CIRCUITS OPEN OR SHORTED
DTCS RELATED TO BATTERY VOLTAGE, IGNITION, OR VIN MESSAGES
TOTALLY INTEGRATED POWER MODULE POWER AND GROUND
TIPM NOT CONFIGURED CORRECTLY
TOTALLY INTEGRATED POWER MODULE (TIPM)
MODULE THAT SET THIS DTC

DIAGNOSTIC TEST

1. **VERIFY DTC IS ACTIVE**

   NOTE: Make sure the IOD fuse is installed and the battery is fully charged before proceeding.

   1. Turn the ignition on.
   2. With the scan tool, read active DTCs.

      Is this DTC active?

      Yes

      - **Refer to DIAGNOSIS AND TESTING** and perform the U0141-Lost Communication with IPM (FCM/TIPM) diagnostic procedure.

      No

      - **Refer to DIAGNOSIS AND TESTING** and perform the Stored Lost Communication DTCs diagnostic procedure.

U029D-LOST COMMUNICATION WITH NOX SENSOR "A"

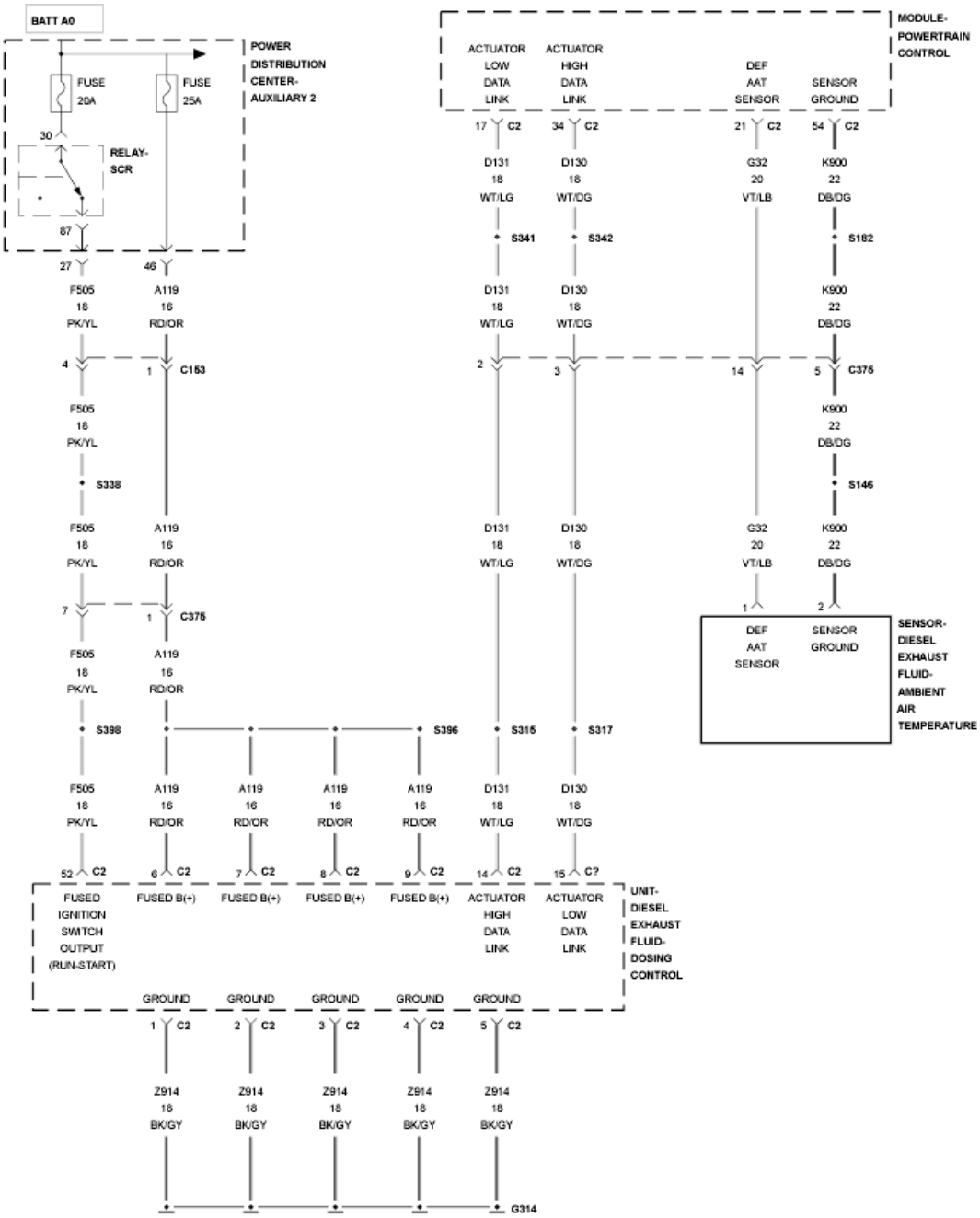

Fig. 51: Diesel Exhaust Fluid (DEF) Dosing Control Unit Wiring Diagram
Courtesy of CHRYSLER GROUP, LLC

For a complete wiring diagram, **refer to appropriate SYSTEM WIRING DIAGRAMS article** .

THEORY OF OPERATION

The aftertreatment system is equipped with two NOx Sensors and modules. The upstream NOx Sensor 1/1 is located before the SCR Catalyst and is permanently connected to a corresponding NOx Sensor Module mounted on the right frame rail. The downstream NOx Sensor 1/2 is located at the outlet of the SCR Catalyst and is

permanently connected to a corresponding NOx Sensor Module also mounted on the right frame rail. The NOx Sensors and NOx Sensor Modules are calibrated to each other and must be replaced as an assembly. The two NOx Sensor and Module assembles are not interchangeable. The NOx Sensor Modules are smart devices and communicate with the Powertrain Control Module (PCM) over the J1939 Data Link. The NOx Sensor Modules perform their own internal diagnostics and report malfunctions back to the PCM. The NOx Sensors are used to monitor the efficiency of the SCR Catalyst. The PCM will illuminate the MIL lamp immediately after the monitor runs and fails. The PCM will turn off the MIL Lamp after the monitor runs and passes for three consecutive trips.

WHEN MONITORED:

Continuously with the ignition on.

SET CONDITION:

The Powertrain Control Module (PCM) does not receive a message from the NOx Sensor 1/1 over the J1939 Data Link.

POSSIBLE CAUSES

Possible Causes
LOW BATTERY VOLTAGE
(F505) FUSED IGNITION SWITCH OUTPUT CIRCUIT OPEN/HIGH RESISTANCE
(F505) FUSED IGNITION SWITCH OUTPUT CIRCUIT SHORTED TO GROUND
(F505) FUSED IGNITION SWITCH OUTPUT CIRCUIT SHORTED TO THE (Z915) GROUND CIRCUIT
(Z915) GROUND CIRCUIT OPEN/HIGH RESISTANCE
(D130) J1939 DATALINK (+) CIRCUIT OPEN/HIGH RESISTANCE
(D131) J1939 DATALINK (-) CIRCUIT OPEN/HIGH RESISTANCE
(D130) J1939 DATALINK (+) CIRCUIT SHORTED TO BATTERY OR GROUND
(D131) J1939 DATALINK (-) CIRCUIT SHORTED TO BATTERY OR GROUND
J1939 DATALINK (+) CIRCUIT SHORTED TO ANOTHER CIRCUIT
J1939 DATALINK (-) CIRCUIT SHORTED TO ANOTHER CIRCUIT
J1939 DATALINK COMPONENT INTERNALLY SHORTED
FAULTY NOx SENSOR 1/1
POWERTRAIN CONTROL MODULE (PCM)

Always perform the Pre-Diagnostic Troubleshooting procedure before proceeding. Refer to PRE-DIAGNOSTIC TROUBLESHOOTING PROCEDURE - 6.7L .

DIAGNOSTIC TEST

1. **ACTIVE DTC**
    1. Ignition on, engine not running.
    2. With the scan tool, read DTCs.

Is DTC U029D Active?

Yes

- Go To 2.

No

- Perform the INTERMITTENT CONDITION diagnostic procedure. Refer to **INTERMITTENT CONDITION - 6.7L** .

2. **OTHER DTCS**

NOTE: **Repair any Voltage Low DTCs before proceeding with this test procedure.**

NOTE: **The J1939 Datalink is a BUS circuit which the PCM uses to communicate with the Turbo Actuator, DEF Dosing Control Unit, NOx Sensor 1/1 and NOx Sensor 1/2. If the J1939 Datalink is shorted or one of these components is internally shorted, communication will be lost and DTCs will set against ALL of these components.**

Are there lost communication DTCs present against All of the components listed in the note above?

Yes

- Go To 6.

No

- Go To 3.

3. **CHECK SYSTEM VOLTAGE**
   1. Check the Batteries and charging system for proper system voltage and operation.

      Is the system voltage normal?

      Yes

      - Go To 4.

      No

      - Diagnose and repair the Batteries and charging system before continuing.
      - Perform the POWERTRAIN VERIFICATION TEST. Refer to **POWERTRAIN VERIFICATION TEST - 6.7L** .

4. **CHECK THE NOx SENSOR 1/1 POWER AND GROUND CIRCUITS**
   1. Turn the ignition on, engine not running.

2. Disconnect the NOx Sensor Module 1/1 harness connector.
3. Measure the voltage across the (F505) Cluster Ignition Supply circuit and the (Z915) Ground circuit at the NOx Sensor Module 1/1 harness connector.

NOTE: Measure the voltage at key on, engine cranking, and at idle.

Does the voltage read within 1.0 Volt of battery voltage?

Yes

- Go To 5.

No

- Repair the (F505) Fused Ignition Switch Output circuit for an open or short to ground, or check the (Z915) Ground circuit for an open.
- Perform the POWERTRAIN VERIFICATION TEST. Refer to **POWERTRAIN VERIFICATION TEST - 6.7L** .

5. **CHECK THE J1939 DATALINK OPEN**
   1. Turn the ignition off.
   2. Disconnect the DEF NOx Sensor 1/2 harness connector.
   3. Disconnect the Turbo Actuator harness connector.
   4. Disconnect the PCM C2 harness connector.
   5. Disconnect the DEF Dosing Control Unit C2 harness connector.

NOTE: Check connectors - Clean/repair as necessary.

6. Measure the resistance of the J1939 Datalink (+) circuit between the DEF NOx Sensor 1/1 harness connector and the PCM C2 harness connector.
7. Measure the resistance of the J1939 Datalink (-) circuit between the DEF NOx Sensor 1/1 harness connector and the PCM C2 harness connector.

Is the resistance below 5.0 Ohms for both circuits?

Yes

- Replace the NOx Sensor 1/1 in accordance with the service information. Refer to **SENSOR, NOX, REMOVAL** .
- Perform the POWERTRAIN VERIFICATION TEST. Refer to **POWERTRAIN VERIFICATION TEST - 6.7L** .

No

- Repair the J1939 Datalink circuit that measured above 5.0 Ohms for an open or high

resistance.

- Perform the POWERTRAIN VERIFICATION TEST. Refer to **POWERTRAIN VERIFICATION TEST - 6.7L** .

6. **CHECK THE COMPONENTS ON THE J1939 DATALINK**

NOTE: **Disconnect only one component at a time during this next step. If the DTCs for the components that are STILL CONNECTED change from active to stored, the component that was disconnected is faulty. If all of the DTCs remain active, then the disconnected component is not the problem. Reconnect each component before going on to the next one so that only one component is disconnected at a time.**

1. Turn the ignition off.
2. Disconnect the Turbo Actuator harness connector. Cycle the ignition key on and off the three times ending with the ignition on. Leave the ignition in the off position for 75 seconds each time.

NOTE: **Monitor the status of the DTCs for the remaining connected components with the scan tool.**

3. Turn the ignition off and reconnect the Turbo Actuator harness connector.
4. Disconnect the NOx Sensor Module 1/1 harness connector. Cycle the ignition key on and off three times ending with the ignition on. Leave the ignition in the off position for 75 seconds each time.

NOTE: **Monitor the status of the DTCs for the remaining connected components with the scan tool.**

5. Turn the ignition off and reconnect the NOx Sensor Module 1/1 harness connector.
6. Disconnect the NOx Sensor Module 1/2 harness connector. Cycle the ignition key on and off three times ending with the ignition on. Leave the ignition in the off position for 75 seconds each time.

NOTE: **Monitor the status of the DTCs for the remaining connected components with the scan tool.**

7. Turn the ignition off and reconnect the NOx Sensor Module 1/2 harness connector.
8. Disconnect the DEF Dosing Control Unit C2 harness connector. Cycle the ignition key on and off three times ending with the ignition on. Leave the ignition in the off position for 75 seconds each time.

NOTE: **Monitor the status of the DTCs for the remaining connected components with the scan tool.**

Did the status of the DTCs change to stored for the components STILL CONNECTED when disconnecting any one of the components listed above?

Yes

- Replace the component that caused the DTC change from active to stored in accordance with the service information.
- Perform the POWERTRAIN VERIFICATION TEST. Refer to **POWERTRAIN VERIFICATION TEST - 6.7L** .

No

- Go To 7.

7. **CHECK THE J1939 DATALINK FOR A SHORT TO GROUND**
   1. Turn the ignition off.
   2. Disconnect the Turbo Actuator, NOx Sensor Modules, DEF Dosing Control Unit, and the PCM C2 harness connectors.
   3. Measure the resistance between ground and the J1939 Datalink (+) circuit at the PCM C2 harness connector.
   4. Measure the resistance between ground and the J1939 Datalink (-) circuit at the PCM C2 harness connector.

   Is the resistance above 10k Ohms for both circuits?

   Yes

   - Go To 8.

   No

   - Repair the J1939 Datalink circuit that did not measure above 10k Ohms for a short to ground.
   - Perform the POWERTRAIN VERIFICATION TEST. Refer to **POWERTRAIN VERIFICATION TEST - 6.7L** .

8. **CHECK THE J1939 DATALINK FOR A SHORT**
   1. Measure the resistance between the J1939 Datalink (+) circuit at the PCM C2 harness connector and all other circuits in the PCM C2 harness connector.
   2. Measure the resistance between the J1939 Datalink (-) circuit at the PCM C2 harness connector and all other circuits in the PCM C2 harness connector.

   NOTE: Disregard any resistance between 50 and 70 Ohms between the J1939 (+) and the J1939 Datalink (-) pins.

   Is the resistance above 10k Ohms for both measurements?

   Yes

   - Go To 9.

No

- Repair the J1939 Datalink circuit for a short to the circuit that did not measure above 10k Ohms.
- Perform the POWERTRAIN VERIFICATION TEST. Refer to **POWERTRAIN VERIFICATION TEST - 6.7L** .

9. **CHECK THE J1939 DATALINK CIRCUITS FOR AN OPEN/HIGH RESISTANCE**
   1. Measure the resistance of the J1939 Datalink (+) circuit between the NOx Sensor Module 1/1 harness connector and the PCM C2 harness connector.
   2. Measure the resistance of the J1939 Datalink (-) circuit between the NOx Sensor Module 1/1 harness connector and the PCM C2 harness connector.

   Is the resistance below 5.0 Ohms for both circuits?

   Yes

   - Replace the Powertrain Control Module in accordance with the service information. Refer to **MODULE, POWERTRAIN CONTROL, 6.7L DIESEL, REMOVAL** .
   - Perform the POWERTRAIN VERIFICATION TEST. Refer to **POWERTRAIN VERIFICATION TEST - 6.7L** .

   No

   - Repair the J1939 circuit for an open or high resistance.
   - Perform the POWERTRAIN VERIFICATION TEST. Refer to **POWERTRAIN VERIFICATION TEST - 6.7L** .

U029E-LOST COMMUNICATION WITH NOX SENSOR "B"

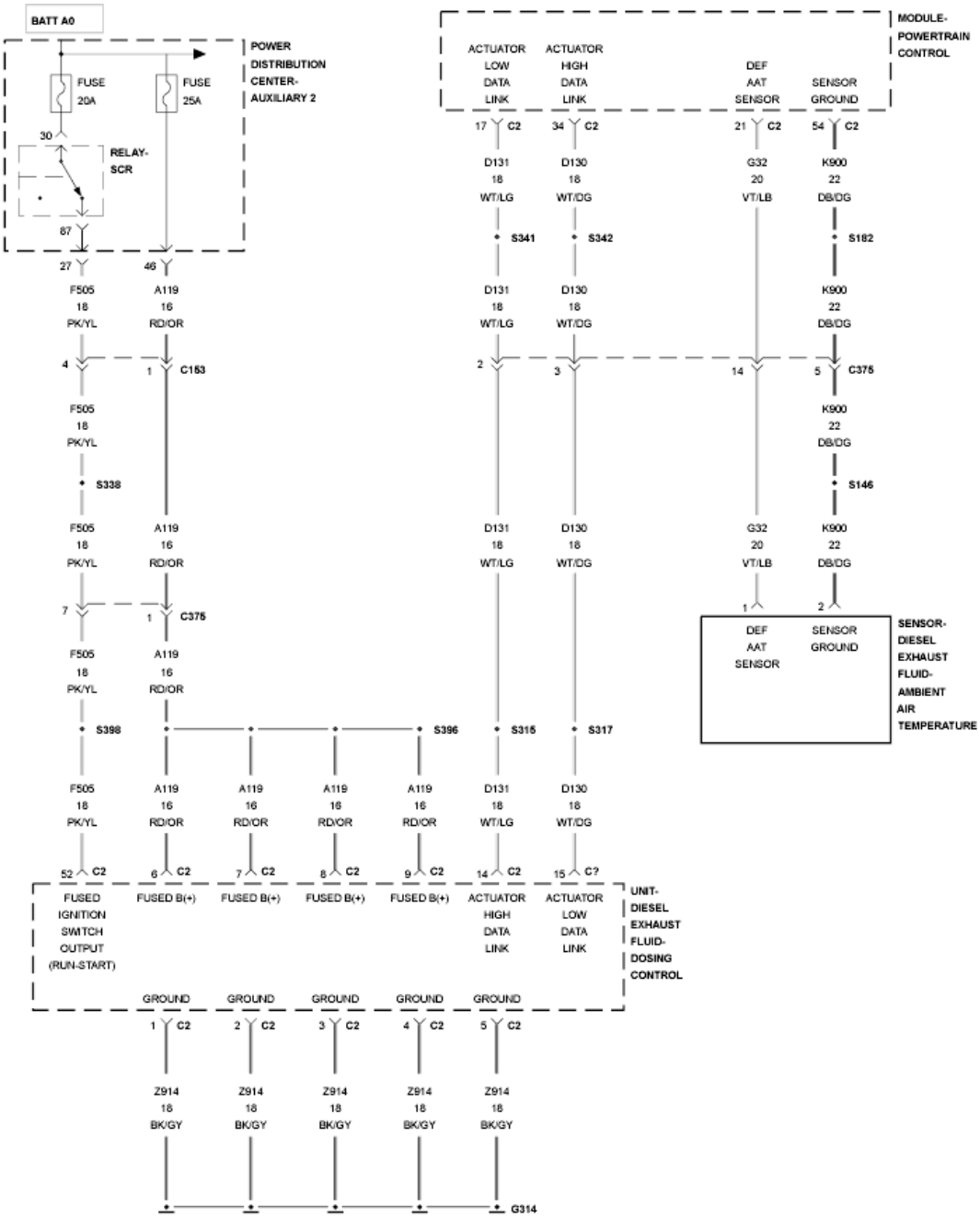

Fig. 52: Diesel Exhaust Fluid (DEF) Dosing Control Unit Wiring Diagram
Courtesy of CHRYSLER GROUP, LLC

For a complete wiring diagram, **refer to appropriate SYSTEM WIRING DIAGRAMS article** .

THEORY OF OPERATION

The aftertreatment system is equipped with two NOx Sensors and modules. The upstream NOx Sensor 1/1 is located before the SCR Catalyst and is permanently connected to a corresponding NOx Sensor Module mounted on the right frame rail. The downstream NOx Sensor 1/2 is located at the outlet of the SCR Catalyst and is

permanently connected to a corresponding NOx Sensor Module also mounted on the right frame rail. The NOx Sensors and NOx Sensor Modules are calibrated to each other and must be replaced as an assembly. The two NOx Sensor and Module assembles are not interchangeable. The NOx Sensor Modules are smart devices and communicate with the Powertrain Control Module (PCM) over the J1939 Data Link. The NOx Sensor Modules perform their own internal diagnostics and report malfunctions back to the PCM. The NOx Sensors are used to monitor the efficiency of the SCR Catalyst. The PCM will illuminate the MIL lamp immediately after the monitor runs and fails. The PCM will turn off the MIL Lamp after the monitor runs and passes for three consecutive trips.

WHEN MONITORED:

Continuously with the ignition on.

SET CONDITION:

The Powertrain Control Module (PCM) does not receive a message from the NOx Sensor 1/2 over the J1939 Data Link.

POSSIBLE CAUSES

Possible Causes
LOW BATTERY VOLTAGE
(F505) FUSED IGNITION SWITCH OUTPUT CIRCUIT OPEN/HIGH RESISTANCE
(F505) FUSED IGNITION SWITCH OUTPUT CIRCUIT SHORTED TO GROUND
(F505) FUSED IGNITION SWITCH OUTPUT CIRCUIT SHORTED TO THE (Z914) GROUND CIRCUIT
(Z914) GROUND CIRCUIT OPEN/HIGH RESISTANCE
(D130) J1939 DATALINK (+) CIRCUIT OPEN/HIGH RESISTANCE
(D131) J1939 DATALINK (-) CIRCUIT OPEN/HIGH RESISTANCE
(D130) J1939 DATALINK (+) CIRCUIT SHORTED TO BATTERY OR GROUND
(D131) J1939 DATALINK (-) CIRCUIT SHORTED TO BATTERY OR GROUND
J1939 DATALINK (+) CIRCUIT SHORTED TO ANOTHER CIRCUIT
J1939 DATALINK (-) CIRCUIT SHORTED TO ANOTHER CIRCUIT
J1939 DATALINK COMPONENT INTERNALLY SHORTED
FAULTY NOx SENSOR 1/2
POWERTRAIN CONTROL MODULE (PCM)

Always perform the Pre-Diagnostic Troubleshooting procedure before proceeding. Refer to PRE-DIAGNOSTIC TROUBLESHOOTING PROCEDURE - 6.7L .

DIAGNOSTIC TEST

1. **ACTIVE DTC**
    1. Ignition on, engine not running.
    2. With the scan tool, read DTCs.

Is DTC U029E Active?

Yes

- Go To 2.

No

- Perform the INTERMITTENT CONDITION diagnostic procedure. Refer to **INTERMITTENT CONDITION - 6.7L** .

2. **OTHER DTCS**

NOTE: **Repair any Voltage Low DTCs before proceeding with this test procedure.**

NOTE: **The J1939 Datalink is a BUS circuit which the PCM uses to communicate with the Turbo Actuator, DEF Dosing Control Unit, NOx Sensor 1/1 and NOx Sensor 1/2. If the J1939 Datalink is shorted or one of these components is internally shorted, communication will be lost and DTCs will set against ALL of these components.**

Are there lost communication DTCs present against All of the components listed in the note above?

Yes

- Go To 6.

No

- Go To 3.

3. **CHECK SYSTEM VOLTAGE**
   1. Check the Batteries and charging system for proper system voltage and operation.

      Is the system voltage normal?

      Yes

      - Go To 4.

      No

      - Diagnose and repair the Batteries and charging system before continuing.
      - Perform the POWERTRAIN VERIFICATION TEST. Refer to **POWERTRAIN VERIFICATION TEST - 6.7L** .

4. **CHECK THE NOx SENSOR 1/2 POWER AND GROUND CIRCUITS**
   1. Turn the ignition on, engine not running.

2. Disconnect the NOx Sensor Module 1/2 harness connector.
3. Measure the voltage across the (F505) Cluster Ignition Supply circuit and the (Z914) Ground circuit at the NOx Sensor Module 1/2 harness connector.

NOTE: Measure the voltage at key on, engine cranking, and at idle.

Does the voltage read within 1.0 Volt of battery voltage?

Yes

- Go To 5.

No

- Repair the (F505) Fused Ignition Switch Output circuit for an open or short to ground, or check the (Z914) Ground circuit for an open.
- Perform the POWERTRAIN VERIFICATION TEST. Refer to **POWERTRAIN VERIFICATION TEST - 6.7L** .

5. **CHECK THE J1939 DATALINK OPEN**
   1. Turn the ignition off.
   2. Disconnect the DEF NOx Sensor 1/1 harness connector.
   3. Disconnect the Turbo Actuator harness connector.
   4. Disconnect the PCM C2 harness connector.
   5. Disconnect the DEF Dosing Control Unit C2 harness connector.

NOTE: Check connectors - Clean/repair as necessary.

6. Measure the resistance of the J1939 Datalink (+) circuit between the DEF NOx Sensor 1/2 harness connector and the PCM C2 harness connector.
7. Measure the resistance of the J1939 Datalink (-) circuit between the DEF NOx Sensor 1/2 harness connector and the PCM C2 harness connector.

Is the resistance below 5.0 Ohms for both circuits?

Yes

- Replace the NOx Sensor 1/2 in accordance with the service information. Refer to **SENSOR, NOX, REMOVAL** .
- Perform the POWERTRAIN VERIFICATION TEST. Refer to **POWERTRAIN VERIFICATION TEST - 6.7L** .

No

- Repair the J1939 Datalink circuit that measured above 5.0 Ohms for an open or high

resistance.

- Perform the POWERTRAIN VERIFICATION TEST. Refer to **POWERTRAIN VERIFICATION TEST - 6.7L** .

6. **CHECK THE COMPONENTS ON THE J1939 DATALINK**

NOTE: Disconnect only one component at a time during this next step. If the DTCs for the components that are STILL CONNECTED change from active to stored, the component that was disconnected is faulty. If all of the DTCs remain active, then the disconnected component is not the problem. Reconnect each component before going on to the next one so that only one component is disconnected at a time.

1. Turn the ignition off.
2. Disconnect the Turbo Actuator harness connector. Cycle the ignition key on and off three times ending with the ignition on. Leave the ignition in the off position for 75 seconds each time.

NOTE: Monitor the status of the DTCs for the remaining connected components with the scan tool.

3. Turn the ignition off and reconnect the Turbo Actuator harness connector.
4. Disconnect the NOx Sensor Module 1/1 harness connector. Cycle the ignition key on and off three times ending with the ignition on. Leave the ignition in the off position for 75 seconds each time.

NOTE: Monitor the status of the DTCs for the remaining connected components with the scan tool.

5. Turn the ignition off and reconnect the NOx Sensor Module 1/1 harness connector.
6. Disconnect the NOx Sensor Module 1/2 harness connector. Cycle the ignition key on and off three times ending with the ignition on. Leave the ignition in the off position for 75 seconds each time.

NOTE: Monitor the status of the DTCs for the remaining connected components with the scan tool.

7. Turn the ignition off and reconnect the NOx Sensor Module 1/2 harness connector.
8. Disconnect the DEF Dosing Control Unit C2 harness connector. Cycle the ignition key on and off three times ending with the ignition on. Leave the ignition in the off position for 75 seconds each time.

NOTE: Monitor the status of the DTCs for the remaining connected components with the scan tool.

Did the status of the DTCs change to stored for the components STILL CONNECTED when disconnecting any one of the components listed above?

Yes

- Replace the component that caused the DTC change from active to stored in accordance with the service information.
- Perform the POWERTRAIN VERIFICATION TEST. Refer to **POWERTRAIN VERIFICATION TEST - 6.7L** .

No

- Go To 7.

7. **CHECK THE J1939 DATALINK FOR A SHORT TO GROUND**
   1. Turn the ignition off.
   2. Disconnect the Turbo Actuator, NOx Sensor Modules, DEF Dosing Control Unit, and the PCM C2 harness connectors.
   3. Measure the resistance between ground and the J1939 Datalink (+) circuit at the PCM C2 harness connector.
   4. Measure the resistance between ground and the J1939 Datalink (-) circuit at the PCM C2 harness connector.

   Is the resistance above 10k Ohms for both circuits?

   Yes

   - Go To 8.

   No

   - Repair the J1939 Datalink circuit that did not measure above 10k Ohms for a short to ground.
   - Perform the POWERTRAIN VERIFICATION TEST. Refer to **POWERTRAIN VERIFICATION TEST - 6.7L** .

8. **CHECK THE J1939 DATALINK FOR A SHORT**
   1. Measure the resistance between the J1939 Datalink (+) circuit at the PCM C2 harness connector and all other circuits in the PCM C2 harness connector.
   2. Measure the resistance between the J1939 Datalink (-) circuit at the PCM C2 harness connector and all other circuits in the PCM C2 harness connector.

   NOTE: Disregard any resistance between 50 and 70 Ohms between the J1939 (+) and the J1939 Datalink (-) pins.

   Is the resistance above 10k Ohms for both measurements?

   Yes

   - Go To 9.

No

- Repair the J1939 Datalink circuit for a short to the circuit that did not measure above 10k Ohms.
- Perform the POWERTRAIN VERIFICATION TEST. Refer to **POWERTRAIN VERIFICATION TEST - 6.7L** .

9. **CHECK THE J1939 DATALINK CIRCUITS FOR AN OPEN/HIGH RESISTANCE**
   1. Measure the resistance of the J1939 Datalink (+) circuit between the NOx Sensor Module 1/2 harness connector and the PCM C2 harness connector.
   2. Measure the resistance of the J1939 Datalink (-) circuit between the NOx Sensor Module 1/2 harness connector and the PCM C2 harness connector.

   Is the resistance below 5.0 Ohms for both circuits?

   Yes

   - Replace the Powertrain Control Module in accordance with the service information. Refer to **MODULE, POWERTRAIN CONTROL, 6.7L DIESEL, REMOVAL** .
   - Perform the POWERTRAIN VERIFICATION TEST. Refer to **POWERTRAIN VERIFICATION TEST - 6.7L** .

   No

   - Repair the J1939 circuit for an open or high resistance.
   - Perform the POWERTRAIN VERIFICATION TEST. Refer to **POWERTRAIN VERIFICATION TEST - 6.7L** .

U040F-INVALID DATA RECEIVED FROM REDUCTANT CONTROL MODULE

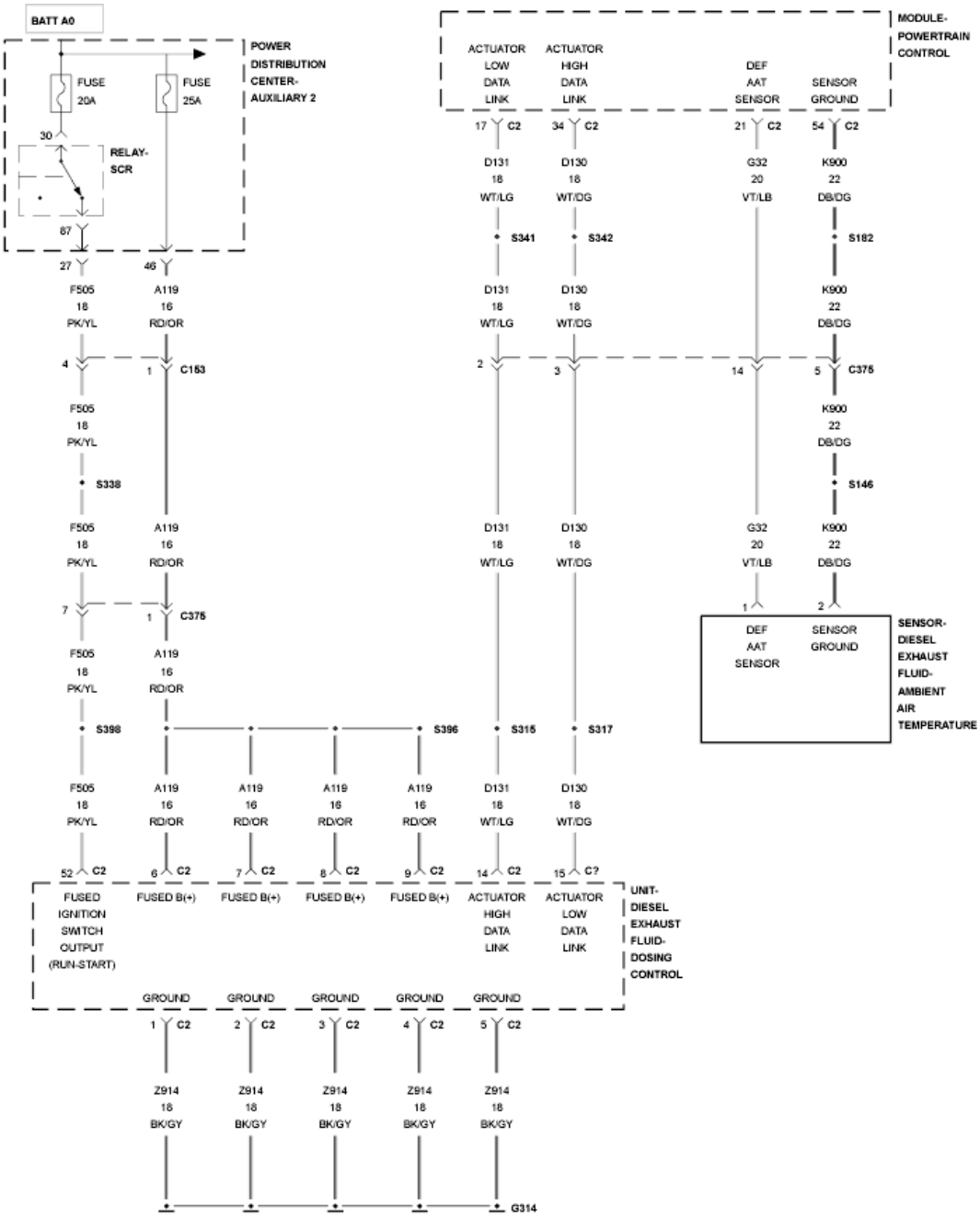

Fig. 53: Diesel Exhaust Fluid (DEF) Dosing Control Unit Wiring Diagram
Courtesy of CHRYSLER GROUP, LLC

For a complete wiring diagram, **refer to appropriate SYSTEM WIRING DIAGRAMS article** .

THEORY OF OPERATION

The Diesel Exhaust Fluid (DEF) Dosing Control Unit is used to control the operation and monitoring of the Diesel Exhaust Fluid system. The DEF Dosing Control Unit shares information with the Powertrain Control Module (PCM) over the J1939 Data Link. The DEF Dosing Control Unit will illuminate the MIL light via the

PCM immediately after the diagnostics runs and fails. The DEF Dosing Control Unit will turn off the MIL light via the PCM when the monitor runs and passes in three consecutive key cycles.

WHEN MONITORED:

Continuously with the ignition on.

SET CONDITION:

An unexpected data link message was sent from the PCM to the DEF Dosing Control Unit and was unable to be interpreted.

POSSIBLE CAUSES

Possible Causes
INCORRECT J1939 DATALINK TERMINATION RESISTANCE
DEF DOSING CONTROL UNIT
POWERTRAIN CONTROL MODULE (PCM)

Always perform the Pre-Diagnostic Troubleshooting procedure before proceeding. Refer to PRE-DIAGNOSTIC TROUBLESHOOTING PROCEDURE - 6.7L .

DIAGNOSTIC TEST

1. **OTHER DTCS**
    1. Ignition on, engine not running.
    2. With the scan tool, View DTCs.

    Is DTC U010E active?

    Yes

    - Perform the diagnostic procedure for U010E before continuing. Refer to **U010E-LOST COMMUNICATION WITH DIESEL EXHAUST FLUID CONTROL UNIT**.
    - Perform the POWERTRAIN VERIFICATION TEST. Refer to **POWERTRAIN VERIFICATION TEST - 6.7L** .

    No

    - Go To 2.
2. **U040F ACTIVE**

    Is DTC U040F active?

    Yes

- Go To 3.

No

- Perform the INTERMITTENT CONDITION diagnostic procedure. Refer to **INTERMITTENT CONDITION - 6.7L** .

3. **CHECK THE POWERTRAIN CONTROL MODULE**
   1. Turn the ignition off.
   2. Disconnect the DEF Dosing Control Unit harness connector.

      NOTE: Check connectors - Clean/repair as necessary.

   3. Ignition on, engine not running.
   4. With the scan tool, View DTCs.

      Is the DTC U010E active?

      Yes

      - Replace the DEF Dosing Control Unit in accordance with the service information. Refer to **UNIT, DIESEL EXHAUST FLUID DOSING CONTROL, REMOVAL** .
      - Perform the POWERTRAIN VERIFICATION TEST. Refer to **POWERTRAIN VERIFICATION TEST - 6.7L** .

      No

      - Replace the Powertrain Control Module in accordance with the service information. Refer to **MODULE, POWERTRAIN CONTROL, 6.7L DIESEL, REMOVAL** .
      - Perform the POWERTRAIN VERIFICATION TEST. Refer to **POWERTRAIN VERIFICATION TEST - 6.7L** .

U059E-INVALID DATA RECEIVED FROM NOX SENSOR "A"

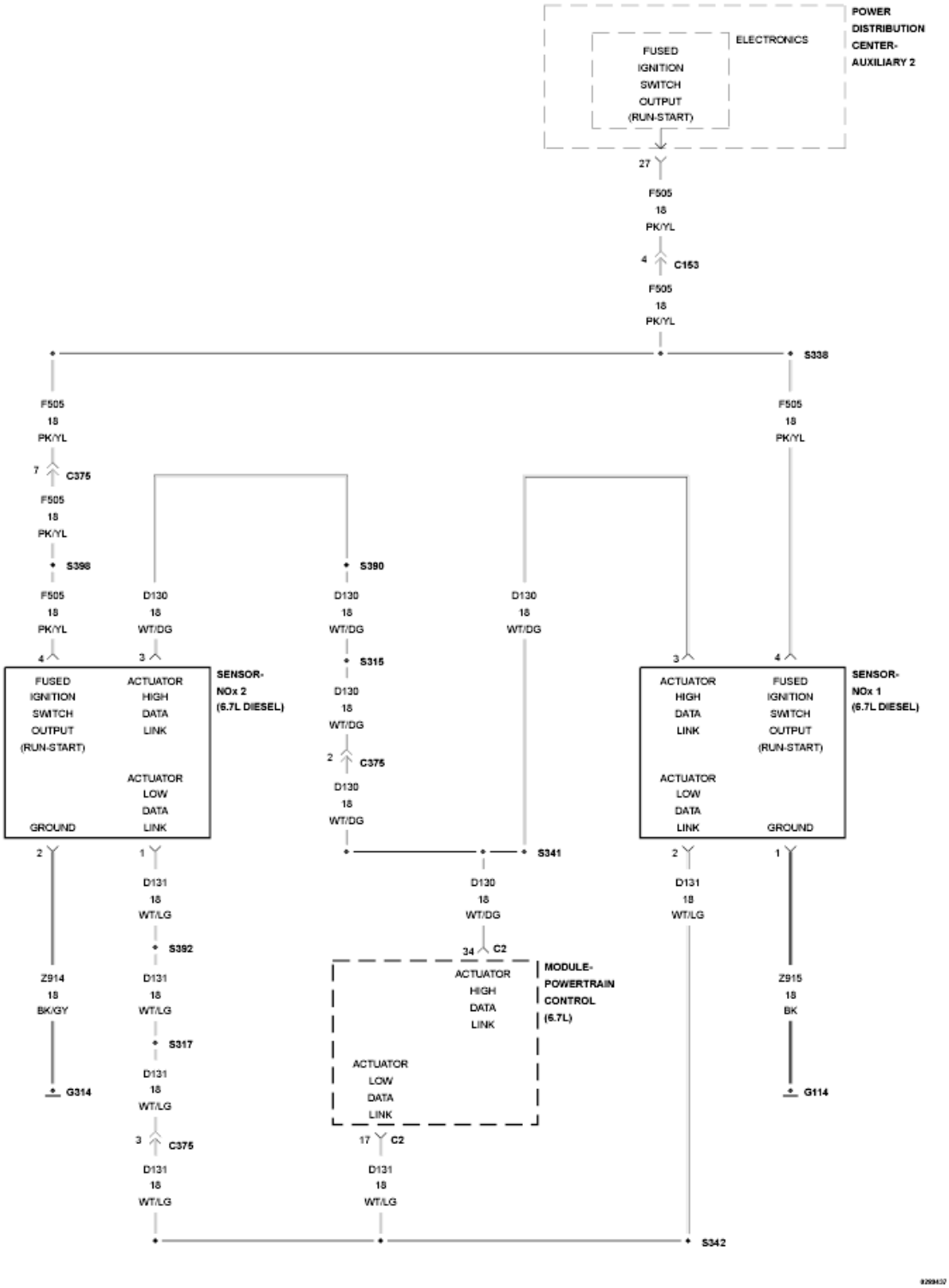

Fig. 54: NOx Sensors Wiring Diagram
Courtesy of CHRYSLER GROUP, LLC

For a complete wiring diagram, **refer to appropriate SYSTEM WIRING DIAGRAMS article** .

THEORY OF OPERATION

The aftertreatment system is equipped with two NOx Sensors and modules. The upstream NOx Sensor 1/1 is located before the SCR Catalyst and is permanently connected to a corresponding NOx Sensor Module mounted on the right frame rail. The downstream NOx Sensor 1/2 is located at the outlet of the SCR Catalyst and is permanently connected to a corresponding NOx Sensor Module also mounted on the right frame rail. The NOx Sensors and NOx Sensor Modules are calibrated to each other and must be replaced as an assembly. The two NOx Sensor and Module assemblies are not interchangeable. The NOx Sensor Modules are smart devices and communicate with the Powertrain Control Module (PCM) over the J1939 Data Link. The NOx Sensor Modules perform their own internal diagnostics and report malfunctions back to the PCM. The NOx Sensors are used to monitor the efficiency of the SCR Catalyst. The PCM will illuminate the MIL lamp immediately after the monitor runs and fails. The PCM will turn off the MIL Lamp after the monitor runs and passes for three consecutive trips.

WHEN MONITORED:

This monitor runs when the change rates of exhaust gas oxygen, NOx, exhaust pressure and exhaust flow are less than a calibrated threshold.

SET CONDITION:

Fault is set if the percentage of time we get the not valid bit is received for more than a calibrated time within a fixed time frame.

POSSIBLE CAUSES

Possible Causes
NOx SENSOR 1/1

Always perform the Pre-Diagnostic Troubleshooting procedure before proceeding. Refer to PRE-DIAGNOSTIC TROUBLESHOOTING PROCEDURE - 6.7L .

DIAGNOSTIC TEST

1. **ACTIVE DTC**
    1. Ignition on, engine not running.
    2. With the scan tool, read DTCs.

    Is the DTC active?

    Yes

    - Replace the NOx Sensor 1/1 in accordance with the service information. Refer to **SENSOR, NOX, REMOVAL** .
    - Perform the POWERTRAIN VERIFICATION TEST. Refer to **POWERTRAIN VERIFICATION TEST - 6.7L** .

    No

- Perform the INTERMITTENT CONDITION - 6.7L. Refer to **INTERMITTENT CONDITION - 6.7L** .

U059F-INVALID DATA RECEIVED FROM NOX SENSOR "B"

Fig. 55: NOx Sensors Wiring Diagram
Courtesy of CHRYSLER GROUP, LLC

For a complete wiring diagram, **refer to appropriate SYSTEM WIRING DIAGRAMS article** .

THEORY OF OPERATION

The aftertreatment system is equipped with two NOx Sensors and modules. The upstream NOx Sensor 1/1 is located before the SCR Catalyst and is permanently connected to a corresponding NOx Sensor Module mounted on the right frame rail. The downstream NOx Sensor 1/2 is located at the outlet of the SCR Catalyst and is permanently connected to a corresponding NOx Sensor Module also mounted on the right frame rail. The NOx Sensors and NOx Sensor Modules are calibrated to each other and must be replaced as an assembly. The two NOx Sensor and Module assemblies are not interchangeable. The NOx Sensor Modules are smart devices and communicate with the Powertrain Control Module (PCM) over the J1939 Data Link. The NOx Sensor Modules perform their own internal diagnostics and report malfunctions back to the PCM. The NOx Sensors are used to monitor the efficiency of the SCR Catalyst. The PCM will illuminate the MIL lamp immediately after the monitor runs and fails. The PCM will turn off the MIL Lamp after the monitor runs and passes for three consecutive trips.

WHEN MONITORED:

This monitor runs when the change rates of exhaust gas oxygen, NOx, exhaust pressure and exhaust flow are less than a calibrated threshold.

SET CONDITION:

Fault is set if the percentage of time we get the not valid bit is above a calibrated threshold within a fixed time frame.

POSSIBLE CAUSES

Possible Causes
NOx SENSOR 1/2

Always perform the Pre-Diagnostic Troubleshooting procedure before proceeding. Refer to PRE-DIAGNOSTIC TROUBLESHOOTING PROCEDURE - 6.7L .

DIAGNOSTIC TEST

1. **ACTIVE DTC**
    1. Ignition on, engine not running.
    2. With the scan tool, read DTCs.

       Is the DTC active?

       Yes

- Replace the NOx Sensor 1/2 in accordance with the service information. Refer to **SENSOR, NOX, REMOVAL** .
- Perform the POWERTRAIN VERIFICATION TEST. Refer to **POWERTRAIN VERIFICATION TEST - 6.7L** .

No

- Perform the INTERMITTENT CONDITION diagnostic procedure. Refer to **INTERMITTENT CONDITION - 6.7L** .

U11C1-LOST COMMUNICATION WITH DIESEL EXHAUST FLUID CONTROL UNIT

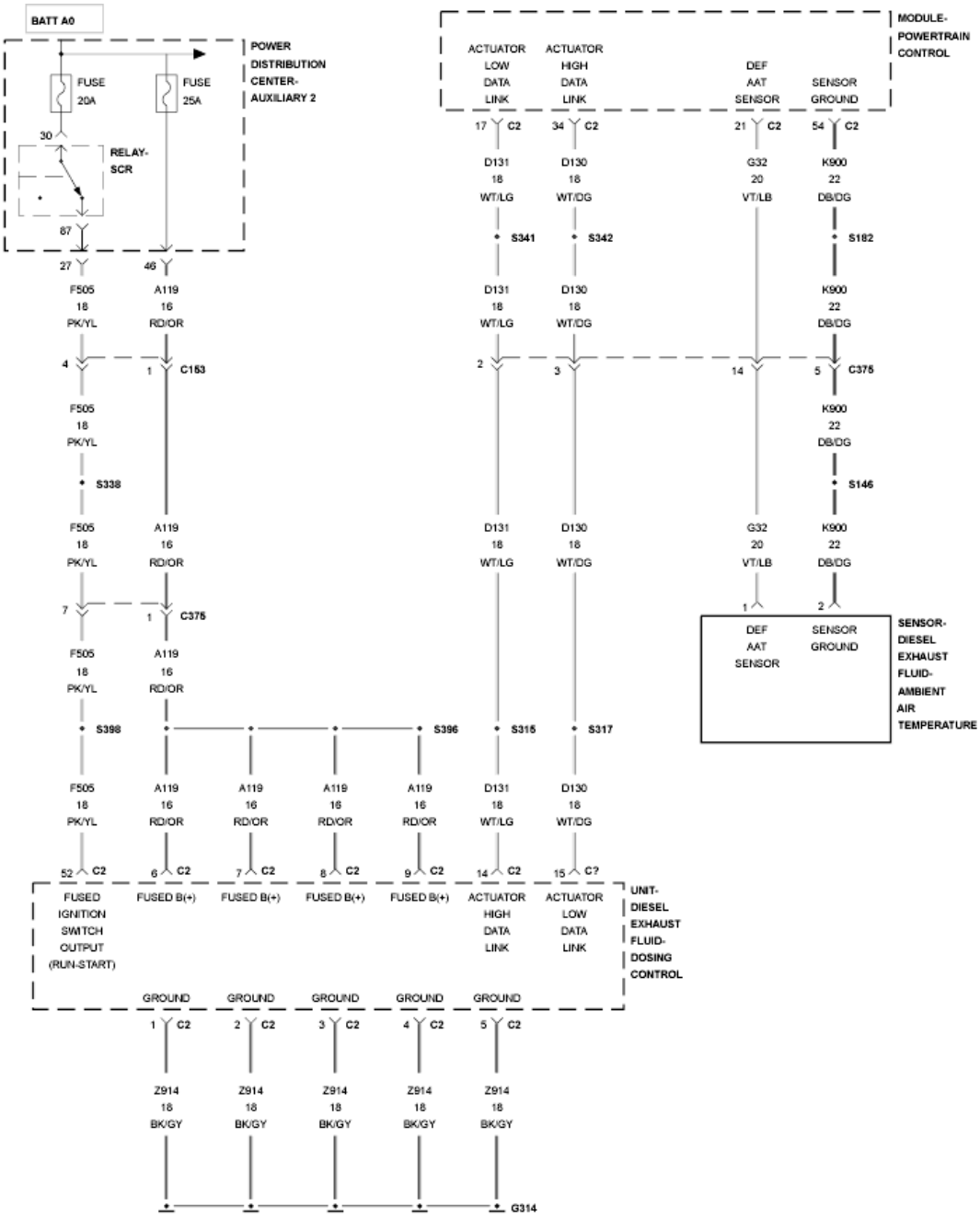

Fig. 56: Diesel Exhaust Fluid (DEF) Dosing Control Unit Wiring Diagram
Courtesy of CHRYSLER GROUP, LLC

For a complete wiring diagram, **refer to appropriate SYSTEM WIRING DIAGRAMS article** .

THEORY OF OPERATION

The Diesel Exhaust Fluid (DEF) Dosing Control Unit is used to control the operation and monitoring of the Diesel Exhaust Fluid system. The DEF Dosing Control Unit is the central control for the aftertreatment diesel exhaust fluid dosing system, and handles the dosing activity, tank level sensing, tank temperature sensing, line

heating, and tank heating. The DEF Dosing Control Unit shares information with the Powertrain Control Module over the J1939 Data Link. The DEF Dosing Control Unit will illuminate the MIL light via the PCM immediately after the diagnostics runs and fails and dosing of fluid into the exhaust system is disabled.

WHEN MONITORED:

Continuously with the ignition on.

SET CONDITION:

The DEF Dosing Control Unit is expecting a valid Data link message from the Powertrain Control Module, but the actual data received was unreadable or missing.

POSSIBLE CAUSES

Possible Causes
(D130) J1939 DATALINK (+) CIRCUIT SHORTED TO BATTERY OR GROUND
(D131) J1939 DATALINK (-) CIRCUIT SHORTED TO BATTERY OR GROUND
(D130) J1939 DATALINK (+) CIRCUIT OPEN/HIGH RESISTANCE
(D131) J1939 DATALINK (-) CIRCUIT OPEN/HIGH RESISTANCE
DEF DOSING CONTROL UNIT
POWERTRAIN CONTROL MODULE (PCM)

Always perform the Pre-Diagnostic Troubleshooting procedure before proceeding. Refer to PRE-DIAGNOSTIC TROUBLESHOOTING PROCEDURE - 6.7L .

DIAGNOSTIC TEST

1. **OTHER DTCS**
    1. Ignition on, engine not running.
    2. With the scan tool, read DTCs.

    Are there any other DEF system DTCs active?

    Yes

    - Repair all other DEF system DTCs before proceeding with this test procedure.
    - Perform the POWERTRAIN VERIFICATION TEST. Refer to **POWERTRAIN VERIFICATION TEST - 6.7L** .

    No

    - Go To 2.
2. **U11C1 ACTIVE**

Is DTC U11C1 active?

Yes

- Go To 3.

No

- Perform the INTERMITTENT CONDITION diagnostic procedure. Refer to **INTERMITTENT CONDITION - 6.7L** .

3. **CHECK THE J1939 DATALINK CIRCUITS FOR AN OPEN/HIGH RESISTANCE**
   1. Turn the ignition off.
   2. Disconnect the DEF Dosing Control Unit C2 harness connector.
   3. Disconnect the PCM C2 harness connector

      NOTE: Check connectors - Clean/repair as necessary.

   4. Measure the resistance of the J1939 Datalink (+) circuit between the DEF Dosing Control Unit C2 harness connector and the PCM C2 harness connector.
   5. Measure the resistance of the J1939 Datalink (-) circuit between the DEF Dosing Control Unit C2 harness connector and the PCM C2 harness connector.

      Is the resistance below 5.0 Ohms for both circuits?

      Yes

      - Go To 4.

      No

      - Repair the J1939 circuit for an open or high resistance.
      - Perform the POWERTRAIN VERIFICATION TEST. Refer to **POWERTRAIN VERIFICATION TEST - 6.7L** .

4. **CHECK THE J1939 DATALINK CIRCUITS FOR A SHORT**
   1. Measure the resistance between the J1939 Datalink (+) circuit at the PCM C2 harness connector and all other circuits in the PCM C1 harness connector.
   2. Measure the resistance between the J1939 Datalink (-) circuit at the PCM C2 harness connector and all other circuits in the PCM C1 harness connector.

      NOTE: Disregard any resistance between 50 and 70 Ohms between the J1939 (+) and the J1939 Datalink (-) pins.

      Is the resistance above 10k Ohms for both circuits?

Yes

- Go To 5.

No

- Repair the J1939 circuit for a short circuit.
- Perform the POWERTRAIN VERIFICATION TEST. Refer to **POWERTRAIN VERIFICATION TEST - 6.7L** .

5. **CHECK THE J1939 DATALINK CIRCUITS FOR A SHORT TO GROUND**
   1. Measure the resistance between ground and the J1939 Datalink (+) circuit at the PCM C1 harness connector.
   2. Measure the resistance between ground and the J1939 Datalink (-) circuit at the PCM C1 harness connector.

   Is the resistance above 10k Ohms for both circuits?

   Yes

   - Go To 6.

   No

   - Repair the J1939 circuit for a short to ground.
   - Perform the POWERTRAIN VERIFICATION TEST. Refer to **POWERTRAIN VERIFICATION TEST - 6.7L** .

6. **DEF DOSING CONTROL UNIT**
   1. Turn the ignition off.
   2. Reconnect the DEF Dosing Control Unit C2 harness connector.
   3. Reconnect the PCM C2 harness connector.
   4. Ignition on, engine not running.
   5. With the scan tool, read DTCs.

   Is DTC P010E active?

   Yes

   - Replace the DEF Dosing Control Unit in accordance with the service information. Refer to **UNIT, DIESEL EXHAUST FLUID DOSING CONTROL, REMOVAL** .
   - Perform the POWERTRAIN VERIFICATION TEST. Refer to **POWERTRAIN VERIFICATION TEST - 6.7L** .

   No

- Replace the Powertrain Control Module in accordance with the service information. Refer to **MODULE, POWERTRAIN CONTROL, 6.7L DIESEL, REMOVAL** .
- Perform the POWERTRAIN VERIFICATION TEST. Refer to **POWERTRAIN VERIFICATION TEST - 6.7L** .

U1403-IMPLAUSIBLE FUEL LEVEL SIGNAL RECEIVED

For a complete wiring diagram, **refer to appropriate SYSTEM WIRING DIAGRAMS article** .

THEORY OF OPERATION

The Totally Integrated Power Module (TIPM) isn't receiving a fuel volume signal over CAN B from the Cluster Module. The TIPM has to send the PCM a fuel volume signal over CAN C. The signal the TIPM sends over CAN C is implausible.

WHEN MONITORED:

Continuously with the ignition on.

SET CONDITION:

The fuel volume message the Powertrain Control Module (PCM) is receiving is implausible.

POSSIBLE CAUSES

Possible Causes
CAN B OPEN OR SHORTED
CLUSTER MODULE
TOTALLY INTEGRATED POWER MODULE (TIPM)
POWERTRAIN CONTROL MODULE (PCM)

Always perform the Pre-Diagnostic Troubleshooting procedure before proceeding. Refer to PRE-DIAGNOSTIC TROUBLESHOOTING PROCEDURE - 6.7L .

DIAGNOSTIC TEST

1. **ACTIVE DTC**
    1. Ignition on, engine not running.
    2. With a scan tool read DTCs.

    Is the DTC Active at this time?

    Yes

    - Go To 2.

No

- Perform the INTERMITTENT CONDITION diagnostic procedure. Refer to **INTERMITTENT CONDITION - 6.7L** .

2. **CAN B BUS HARDWARE DTCS ALSO ACTIVE**
   1. With a scan tool check for DTCs in the TIPM.

      Are any CAN B Hardware related DTCs active at this time?

      Yes

      - Perform the appropriate diagnostic procedure. Refer to **DIAGNOSIS AND TESTING** .
      - Perform the BODY VERIFICATION TEST. Refer to **STANDARD PROCEDURE** .

      No

      - Replace and program the Powertrain Control Module in accordance with the service information. Refer to **PCM - REMOVAL** , also see **PCM/ECM / TCM PROGRAMMING** .
      - Perform the POWERTRAIN VERIFICATION TEST. Refer to **POWERTRAIN VERIFICATION TEST - 6.7L** .

U1412-IMPLAUSIBLE VEHICLE SPEED SIGNAL RECEIVED

For a complete wiring diagram, **refer to appropriate SYSTEM WIRING DIAGRAMS article** .

THEORY OF OPERATION

The ABS Module sends vehicle speed information over the CAN C Bus circuit to the Powertrain Control Module (PCM).

WHEN MONITORED:

Continuously with the ignition on.

SET CONDITION:

The Powertrain Control Module (PCM) gets an implausible signal over the CAN C circuit from the ABS Module.

POSSIBLE CAUSES

Possible Causes
CAN C BUS CIRCUIT SHORTED
CAN C BUS CIRCUIT OPEN
ABS MODULE

Always perform the Pre-Diagnostic Troubleshooting procedure before proceeding. Refer to PRE-DIAGNOSTIC TROUBLESHOOTING PROCEDURE - 6.7L .

DIAGNOSTIC TEST

1. **ACTIVE DTC**
    1. Ignition on, engine not running.
    2. With a scan tool, read DTCs.

    Is the U1412-IMPLAUSIBLE VEHICLE SPEED SIGNAL RECEIVED active at this time?

    Yes

    - Go To 2.

    No

    - Perform the INTERMITTENT CONDITION diagnostic procedure. Refer to **INTERMITTENT CONDITION - 6.7L** .
2. **U0001-NO COMMUNICATION ON THE CAN C BUS CIRCUIT IS ACTIVE**
    1. Continue reading DTCs.

    Is the U0001-NO COMMUNICATION ON THE CAN C BUS CIRCUIT ACTIVE at this time?

    Yes

    - Perform the U0001-NO COMMUNICATION ON THE CAN C BUS CIRCUIT diagnostic procedure. Refer to **DIAGNOSIS AND TESTING** .

    No

    - Go To 3.
3. **ABS MODULE IS ACTIVE ON THE CAN C BUS**
    1. With the scan tool, select ECU View.
    2. Verify that the ABS Module active on the bus.

    Is the ABS Module active on the bus?

    Yes

    - Go To 4.

    No

- Perform the No Response from ABS diagnostic procedure. Refer to **DIAGNOSIS AND TESTING** .
- Perform the BODY VERIFICATION TEST. Refer to **STANDARD PROCEDURE** .

4. **ACTIVE DTCS IN THE TIPM**
   1. With the scan tool, select ECU View and select TIPM.
   2. With the scan tool, read active DTCs.

      Is the U0001-NO COMMUNICATION ON THE CAN C BUS CIRCUIT ACTIVE in the TIPM at this time?

      Yes

      - Replace the ABS Module in accordance with the service information.
      - Perform the ABS VERIFICATION TEST. Refer to **ABS VERIFICATION TEST** .

      No

      - Replace and program the Powertrain Control Module in accordance with the service information. Refer to **PCM - REMOVAL** , also see **PCM/ECM / TCM PROGRAMMING** .
      - Perform the POWERTRAIN VERIFICATION TEST. Refer to **POWERTRAIN VERIFICATION TEST - 6.7L** .

U1421-IMPLAUSIBLE IGNITION KEY OFF TIME RECEIVED

For a complete wiring diagram, **refer to appropriate SYSTEM WIRING DIAGRAMS article** .

THEORY OF OPERATION

This monitor checks if the timer that counts the ignition off time is stuck.

WHEN MONITORED:

With the ignition on.

SET CONDITION:

If the difference between coolant temperatures at the previous ignition off and next key on is greater than -12.2° C (10°F), and the ignition off time was less than two minutes, the Powertrain Control Module (PCM) increments a fail counter of one. If the fail counter reaches 16 counts, a DTC is set and MIL lamp turns on.

POSSIBLE CAUSES

Possible Causes
CAN C OPEN OR SHORTED

CLUSTER/CCN
TOTALLY INTEGRATED POWER MODULE (TIPM)
POWERTRAIN CONTROL MODULE (PCM)

Always perform the Pre-Diagnostic Troubleshooting procedure before proceeding. Refer to PRE-DIAGNOSTIC TROUBLESHOOTING PROCEDURE - 6.7L .

DIAGNOSTIC TEST

1. **ACTIVE DTC**

   NOTE: Low battery voltage as well or an IOD fuse which is missing or not pushed in completely can cause the DTC to set. Make sure that the battery is fully charged and Ignition Off Draw (IOD) fuse is properly installed before continuing.

   1. Ignition on, engine not running.
   2. With a scan tool clear DTCs.
   3. Turn the ignition off for 75 seconds.
   4. Turn the ignition on.
   5. With a scan tool read DTCs.

   Is the DTC active at this time?

   Yes

   - Go To 3.

   No

   - Perform the INTERMITTENT CONDITION diagnostic procedure. Refer to **INTERMITTENT CONDITION - 6.7L** .

2. **CHECKING THE PCM POWERS AND GROUNDS**
   1. Perform the CHECKING THE PCM POWERS AND GROUNDS diagnostic procedure. Refer to **DIAGNOSIS AND TESTING, 6.7L** .

   Were any problems found?

   Yes

   - Perform the appropriate repair.
   - Perform the POWERTRAIN VERIFICATION TEST. Refer to **POWERTRAIN VERIFICATION TEST - 6.7L** .

   No

- Go To 3.

3. **CHECKING FOR TSB/PCM FLASH UPDATES**
    1. Check for any Service Bulletins or PCM flash updates that may apply.

       Were any Service Bulletins or PCM flash updates found?

       Yes

       - Perform the appropriate repair.
       - Perform the POWERTRAIN VERIFICATION TEST. Refer to **POWERTRAIN VERIFICATION TEST - 6.7L** .

       No

       - Go To 4.

4. **CAN B BUS HARDWARE DTCS ALSO ACTIVE**
    1. With a scan tool check for DTCs in the TIPM.

       Are any CAN B Hardware related DTCs active at this time?

       Yes

       - Perform the appropriate diagnostic procedure. Refer to **DIAGNOSIS AND TESTING** .

       No

       - Replace and program the Powertrain Control Module in accordance with the service information. Refer to **PCM - REMOVAL** , also see **PCM/ECM / TCM PROGRAMMING** .
       - Perform the POWERTRAIN VERIFICATION TEST. Refer to **POWERTRAIN VERIFICATION TEST - 6.7L** .

U1601-ECU APPLICATION SOFTWARE CODE 1 MISSING OR CORRUPTED

For a complete wiring diagram, **refer to appropriate SYSTEM WIRING DIAGRAMS article** .

THEORY OF OPERATION

If the Powertrain Control Module (PCM) does not have a calibration installed, or has an unapproved calibration installed then the PCM will be in a ROM boot state. The PCM will have power but no approved software to allow the vehicle to be started and driven. No further diagnostics of the PCM will be available at this time. This code will be cleared when the PCM has the correct approved calibration installed.

WHEN MONITORED:

With the ignition on.

SET CONDITION:

The Powertrain Control Module (PCM) is in ROM boot mode.

POSSIBLE CAUSES

Possible Causes
POWERTRAIN CONTROL MODULE HAS NO SOFTWARE INSTALLED
SOFTWARE DOWNLOAD FAILED DURING THE DOWNLOAD PROCESS
POWERTRAIN CONTROL MODULE HAS UNAPRROVED SOFTWARE INSTALLED

Always perform the Pre-Diagnostic Troubleshooting procedure before proceeding. Refer to PRE-DIAGNOSTIC TROUBLESHOOTING PROCEDURE - 6.7L .

DIAGNOSTIC TEST

1. **NEW POWERTRAIN CONTROL MODULE**
    1. If the PCM was replaced and not programmed this DTC will set.
    2. With a scan tool clear DTCs.

    Has the PCM been replaced on this vehicle?

    Yes

    - Program the Powertrain Control Module (PCM) with the correct software.
    - Perform the POWERTRAIN VERIFICATION TEST. Refer to **POWERTRAIN VERIFICATION TEST - 6.7L** .

    No

    - Go To 2.
2. **DOWNLOAD FAILED**
    1. If the vehicle lost battery power or the scan tool was disconnected during programming, this DTC will set.

    Was a software download interrupted during the download process?

    Yes

    - Reprogram the Powertrain Control Module in accordance with the service information. Refer to **PCM/ECM / TCM PROGRAMMING** .
    - Perform the POWERTRAIN VERIFICATION TEST. Refer to **POWERTRAIN VERIFICATION TEST - 6.7L** .

    No

- Go To 3.

3. **UNAPPROVED SOFTWARE INSTALLED**
    1. Unapproved software programmed into the Powertrain Control Module is not a warrantable repair.

       If tests one and two do not apply, the vehicle has been programmed with unapproved software.

       Yes

       - Reprogram the Powertrain Control Module with the correct software. Refer to **PCM/ECM / TCM PROGRAMMING** .
       - Perform the POWERTRAIN VERIFICATION TEST. Refer to **POWERTRAIN VERIFICATION TEST - 6.7L** .